IDAHO
DEPARTMENT OF ENVIRONMENTAL QUALITY

PARTIAL PERMIT FOR HWMA STORAGE and TREATMENT

for the

LIQUID WASTE MANAGEMENT SYSTEM at the IDAHO NUCLEAR TECHNOLOGY & ENGINEERING CENTER

on the

IDAHO NATIONAL LABORATORY

EPA ID NO. ID4890008952

Revision Date: September 5, 2019

Book 3 of 4

LIST OF APPENDICES

RCRA PERMIT

FOR THE

IDAHO NATIONAL LABORATORY

Volume 14
INTEC Liquid Waste Management System

List of Appendices

Effective Date: November 20, 2014

LIST OF APPENDICES

APPENDIX NUMBER	APPENDIX DESCRIPTION
APPENDIX I	DRAWING PACKAGE
APPENDIX II	DIAGRAM PACKAGE
APPENDIX III	FINAL REPORT FOR ORGANICS PARTITIONING RESULTING FROM OPERATION OF AN INTEC DOUBLE NEEDLE SAMPLER, REVISION 1, SEPTEMBER 2004
APPENDIX IV	STANDARD DOUBLE NEEDLE SAMPLING PROTOCOL
APPENDIX V	ETS MERCURY CONCENTRATION JUSTIFICATION
APPENDIX VI	PILOT PLANT REPORT FOR TREATING SODIUM-BEARING WASTE SURROGATES CARBONATE FLOWSHEET
APPENDIX VII	OUO/CBI INFORMATION
APPENDIX VIII	OTHER REQUIRED INFORMATION (SECTIONS E, J, K, & L)

APPENDIX I -
DRAWING PACKAGE

RCRA PERMIT

FOR THE

IDAHO NATIONAL LABORATORY

Volume 14
INTEC Liquid Waste Management System

Appendix I

Section B, Drawing Package

Effective Date: November 20, 2014

DRAWING LIST (continued)

Drawing Number	Revision Number	Description
057807	Revision 2	CPP-659 SPACE OCCUPANCY 2nd LEVEL
057808	Revision 4	CPP-659 SPACE OCCUPANCY 1st LEVEL
057812	Revision 2	CPP-659 SPACE OCCUPANCY 3rd LEVEL AND HOT SUMP
103171	Revision 7	CPP-604 WASTE DISPOSAL BUILDING SLAB AT ELEVATION 27' 0" HATCH COVER DETAILS
103180	Revision 6	CPP-604 WASTE DISPOSAL BUILDING LIQUID EVAPORATION ROOM
103530	Revision 13	CPP-604 FOUNDATION & ENCLOSURE FOR STORAGE TANKS SECTION PLAN DETAILS
103544	Revision 7	CPP-604 STORAGE TANK ENCLOSURE STAINLESS STEEL FLOOR & WALL LINING
132358	Revision 2	CPP-659 STAINLESS STEEL LINER & EMBEDS STANDARD DETAIL
132359	Revision 1	CPP-659 STAINLESS STEEL LINER & EMBEDS STANDARD DETAIL
132361	Revision 1	CPP-659 STAINLESS STEEL LINER & EMBEDS STANDARD DETAIL
132376	Revision 5	CPP-659 THIRD LEVEL FLOOR SLAB PLAN 1 CALCINE AREA
132377	Revision 6	CPP-659 THIRD LEVEL FLOOR SLAB PLAN 2 CALCINE AREA
132378	Revision 2	CPP-659 THIRD LEVEL FLOOR SLAB PLAN 3 CALCINE AREA
132379	Revision 3	CPP-659 THIRD LEVEL FLOOR SLAB SECTIONS CALCINE AREA
132380	Revision 4	CPP-659 THIRD LEVEL FLOOR SLAB SECTIONS CALCINE AREA
132381	Revision 3	CPP-659 THIRD LEVEL FLOOR SLAB SECTIONS CALCINE AREA
132382	Revision 2	CPP-659 THIRD LEVEL FLOOR SLAB SECTIONS CALCINE AREA

DRAWING LIST (continued)

Drawing Number	Revision Number	Description
132383	Revision 4	CPP-659 THIRD LEVEL FLOOR SLAB SECTIONS CALCINE AREA
132390	Revision 2	CPP-659 THIRD FLOOR SLAB SECTIONS & DETAILS CALCINE AREA
132391	Revision 2	CPP-659 THIRD LEVEL FLOOR SLAB SECTIONS & DETAILS CALCINE AREA
132392	Revision 6	CPP-659 THIRD LEVEL FLOOR WALL PLAN 1 CALCINE AREA
132393	Revision 4	CPP-659 THIRD LEVEL FLOOR WALL PLAN 2 CALCINE AREA
132394	Revision 4	CPP-659 THIRD LEVEL FLOOR WALL PLAN 3 CALCINE AREA
132395	Revision 5	CPP-659 SECOND LEVEL FLOOR WALL PLAN 1 CALCINE AREA
132396	Revision 3	CPP-659 SECOND LEVEL FLOOR PLAN 2 CALCINE AREA
132397	Revision 3	CPP-659 SECOND LEVEL FLOOR WALL PLAN 3 CALCINE AREA
132444	Revision 3	CPP-659 FIRST LEVEL SECTIONS & DETAILS CALCINE AREA
132445	Revision 2	CPP-659 FIRST LEVEL SECTIONS CALCINE AREA
132446	Revision 2	CPP-659 FIRST LEVEL SECTIONS CALCINE AREA
132466	Revision 0	CPP-659 FIRST LEVEL FLOOR & FOUNDATION PLAN CALCINE AREA
133376	Revision 7	CPP-659 FLOW DIAGRAM LEGEND SYMBOLS AND ABBREVIATIONS
134619	Revision 0	CPP-659 STAINLESS STEEL FLOOR LINER PLATE INSTALLATION FLOOR PLAN NO. ONE CALCINING AREA
134620	Revision 3	CPP-659 STAINLESS STEEL FLOOR LINER PLATE INSTALLATION FLOOR PLAN NO. TWO CALCINING AREA
134621	Revision 2	CPP-659 STAINLESS STEEL FLOOR LINER PLATE INSTALLATION FLOOR PLAN NO. THREE CALCINING AREA

DRAWING LIST (continued)

Drawing Number	Revision Number	Description
134622	Revision 2	CPP-659 STAINLESS STEEL FLOOR LINER PLATE INSTALLATION SECTIONS AND DETAILS CLACING AND DECON AREAS
134623	Revision 0	CPP-659 STAINLESS STEEL FLOOR LINER PLATE INSTALLATION SECTIONS AND DETAILS CALCINING AND DECON AREAS
134624	Revision 1	CPP-659 STAINLESS STEEL FLOOR LINER PLATE INSTALLATION SECTIONS AND DETAILS CALCINING AND DECON AREAS
155069	Revision 5	CPP-604 SPARE PEW EVAPORATOR SYSTEM PLAN & SECTIONS
155070	Revision 2	CPP-604 SPARE PEW EVAPORATOR SYSTEM SECTIONS & DETAILS
158768	Revision 6	CPP-604 CONDENSATE CELL FLOOR LINER PLAN & CONNECTIONS
162748	Revision 4	CPP-604 WL-129 EVAPORATOR UPGRADE CELL NO. 2 CELL LINING PLAN SECTIONS AND DETAILS
176263	Revision 2	CPP-659 LET&D ACID RECYCLE SYSTEM FOUNDATION PLAN
176265	Revision 1	CPP-659 LET&D ACID RECYCLE SYSTEM FOUNDATION SECTIONS
176301	Revision 2	CPP-659 LET&D ACID RECYCLE SYSTEM HEAD TANK VES-NCR-173 & SUPPORT BRACKET
347791	Revision 2	CPP-1618 LIQUID EFFLUENT TREATMENT & TREATMENT FACILITY NOTES & ABBREVIATIONS
347796	Revision 2	CPP-1618 LIQUID EFFLUENT TREATMENT & DISPOSAL FACILITY BOTTOMS TANK PIT PLAN SECTIONS & DETAILS
347798	Revision 2	CPP-1618 LIQUID EFFLUENT TREATMENT AND DISPOSAL FACILITY FIRST FLOOR PLAN
369374	Revision 3	PWL COLLECTION SYSTEM SUMP DETAILS
370862	Revision 2	604 WL-101/102 VAULT PROJECT VAULT LINER SYSTEM ASSEMBLY PLAN & INSTALLATION NOTES

DRAWING LIST (continued)

Drawing Number	Revision Number	Description
370863	Revision 2	604 WL-101/102 VAULT PROJECT VAULT LINER SYSTEM ASSEMBLY SECTIONS
370864	Revision 3	CPP-604 WL-101 WL-102 VAULT PROJECT VAULT LINER INSTALLATION
370865	Revision 3	CPP-604 WL-101 WL-102 VAULT PROJECT VAULT LINER INSTALLATION NOTES & DETAILS
370866	Revision 2	CPP-604 WL-101 WL-102 VAULT PROJECT VAULT LINER FOLDING PATTERN
370867	Revision 2	CPP-604 WL-101 WL-102 VAULT PROJECT VAULT LINER FABRICATION
383716	Revision 2	CPP-659 HIGH LEVEL LIQUID WASTE EVAPORATOR SECTIONS & DETAILS STAINLESS STEEL LINER PLATE
400814	Revision 5	CPP-604 SPACE OCCUPANCY FLOOR PLAN
400815	Revision 8	CPP-604 SPACE OCCUPANCY FLOOR PLAN
IWTU		
632451	Revision 5	CONCRETE GENERAL NOTES AND STANDARD DETAILS
632452	Revision 3	CONCERTE STANDARD EMBEDMENT DETAILS AND SCHEDULES
632483	Revision 4	CONCRETE PROCESS CELL FOUNDATION LINER PLATE EMB DETAILS SHT 1 OF 2
632484	Revision 4	CONCRETE PROCESS CELL FOUNDATION LINER PLATE EMB DETAILS SHT 2 OF 2
632340	Revision 1	DRAINAGE SYSTEM MAP
632503	Revision 6	CONCRETE PROCESS CELLS PLAN, SECTIONS AND DETAILS
632504	Revision 5	CONCRETE PROCESS CELLS WALL ELEVATIONS
632512	Revision 6	CONCRETE PACKAGING CELLS PLANS, SECTIONS AND DETAILS

DRAWING LIST (continued)

Drawing Number	Revision Number	Description
632513	Revision 4	CONCRETE PACKAGING CELLS WALL ELEVATIONS
632830	Revision 4	SITE EQUIPMENT ARRANCEMENT PLAN EL. 100’-0” TO 120’-0”
632831	Revision 3	SITE EQUIPMENT ARRANGEMENT PLAN EL. 120’-0” & ABOVE

GENERAL NOTES:

TOTAL FLOOR AREA 21,339 SQ. FT.
FOOTAGE CALCULATED FROM
INSIDE OF EXTERIOR WALLS.

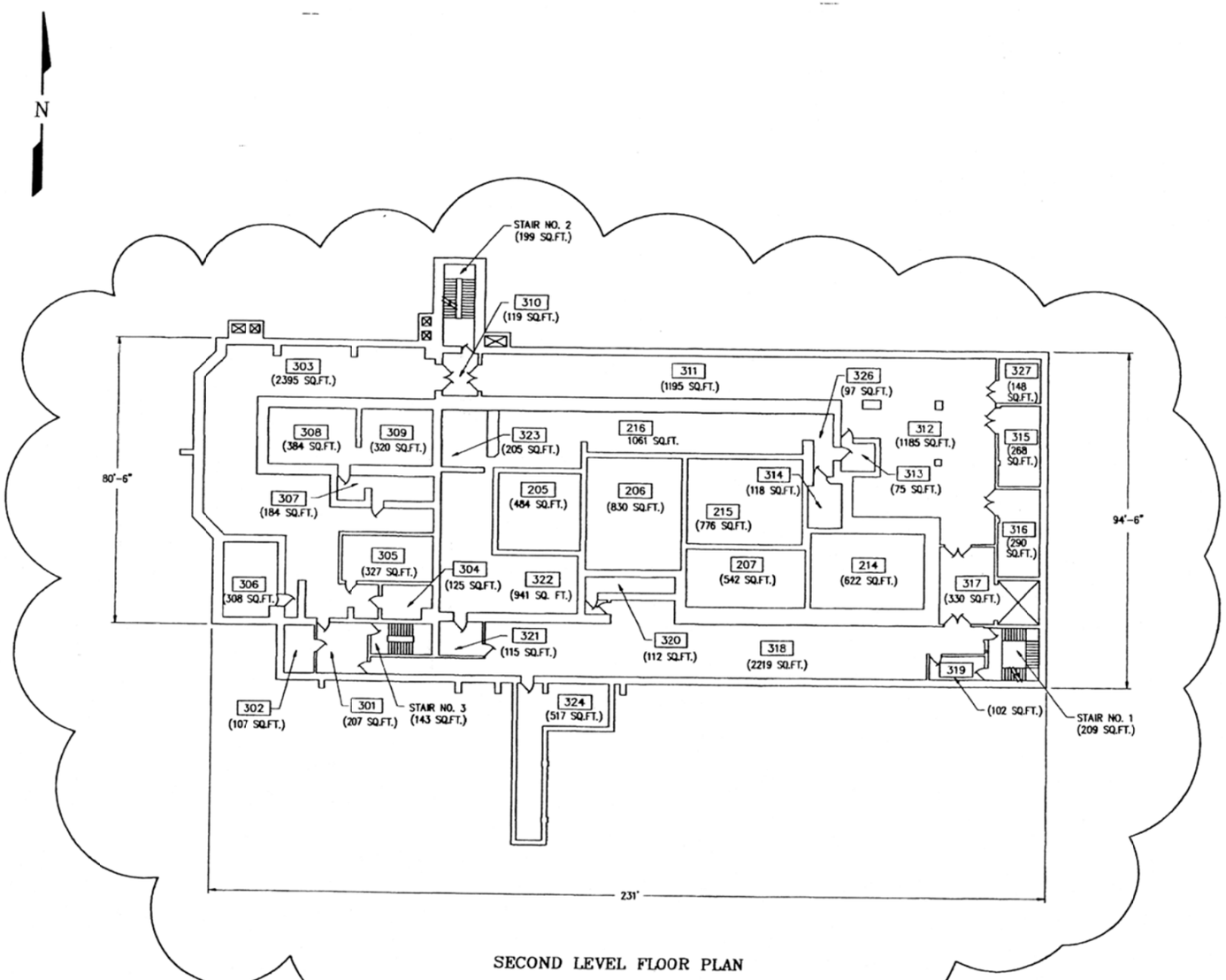

SECOND LEVEL FLOOR PLAN

NO.	REVISIONS	DRAFTER DATE	CHECKER DATE	DFTG SUPV DATE	SYS ENGR DATE
2	REVISED PER DCN #145677-AB22	MAW 05-07-93	DKS 5-17-93	[illegible]	CPF 6/4/93
1	REVISED AND REDRAWN PER DCN #122620-AB33	ALR 1-24-90	GTW 1-29-90	GTW 1-30-90	GTW 1-30-90

CONTROLLED DOCUMENT CLASS I

Westinghouse Idaho Nuclear Company Inc.
IDAHO CHEMICAL PROCESSING PLANT
IDAHO FALLS, IDAHO

FOR
U.S. DEPARTMENT OF ENERGY
IDAHO OPERATIONS OFFICE
IDAHO FALLS, IDAHO

APPROVALS	SIGNATURE	DATE
DRAFTER		
CHECKER		
DFTG SUPV		
DESIGN ENGR		
SYS ENGR		
ENGR MGR		
PROJ MGR		

SCALE 1/16 = 1FT 0
DATE ISSUED

CPP-659

SPACE OCCUPANCY
2ND LEVEL

NC

DWG. SIZE	INDEX CODE NUMBER AREA	DWG TYPE	CL	ORIG.	DRAWING NUMBER	REV.
D	200	0659	03	936	057807	2

JOB NUMBER 122620 TAKEN FROM DRAWING NO. REDRAWN

EDC

CAD GENERATED - AUTOCAD

608650

GENERAL NOTES:

TOTAL FLOOR AREA: 43,679 SQ. FT.
FOOTAGE CALCULATED FROM
INSIDE OF EXTERIOR WALLS.

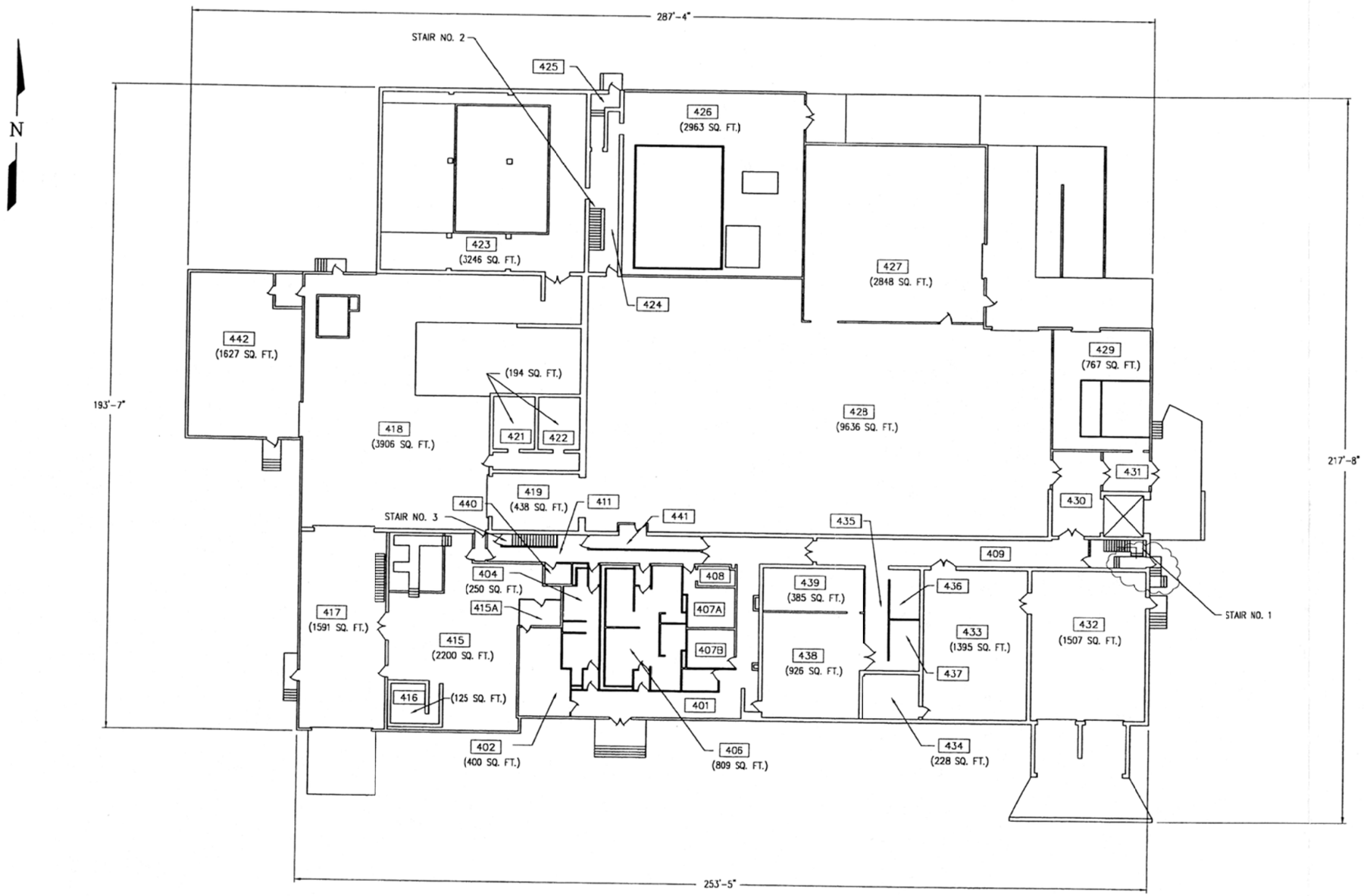

FIRST FLOOR PLAN

NO.	REVISIONS	DRAFTER DATE	CHECKER DATE	DFTG SUPV DATE	SYS ENGR DATE
4	SEE DAR #10509 W.O. 172983	LTR 9-22-97	JPB 10-28-97		
3	PER DCN #145677-AB20	HJB 22-10-93	DKS 25-17-93	GTW 06-25-93	CPF 05-11-93

Westinghouse Idaho Nuclear Company Inc.
IDAHO CHEMICAL PROCESSING PLANT
IDAHO FALLS, IDAHO

FOR
U.S. DEPARTMENT OF ENERGY
IDAHO OPERATIONS OFFICE
IDAHO FALLS, IDAHO

CPP-659

SPACE OCCUPANCY
1ST LEVEL

APPROVALS	SIGNATURE	DATE
DRAFTER		
CHECKER		
DFTG SUPV		
DESIGN ENGR		
SYS ENGR		
ENGR MGR		
PROJ MGR		

SCALE 1/16 = 1FT 0
DATE ISSUED

DWG. SIZE	INDEX CODE NUMBER: AREA	DWG TYPE	CL	ORIG.	DRAWING NUMBER	REV.
D	200	0659	03	936	057808	4

NC

JOB NUMBER 122620 TAKEN FROM DRAWING NO. REDRAWN

CAD GENERATED - AUTOCAD

GENERAL NOTES:

TOTAL FLOOR AREA: 16387 SQ. FT.
FOOTAGE CALCULATED FROM
INSIDE OF EXTERIOR WALLS.

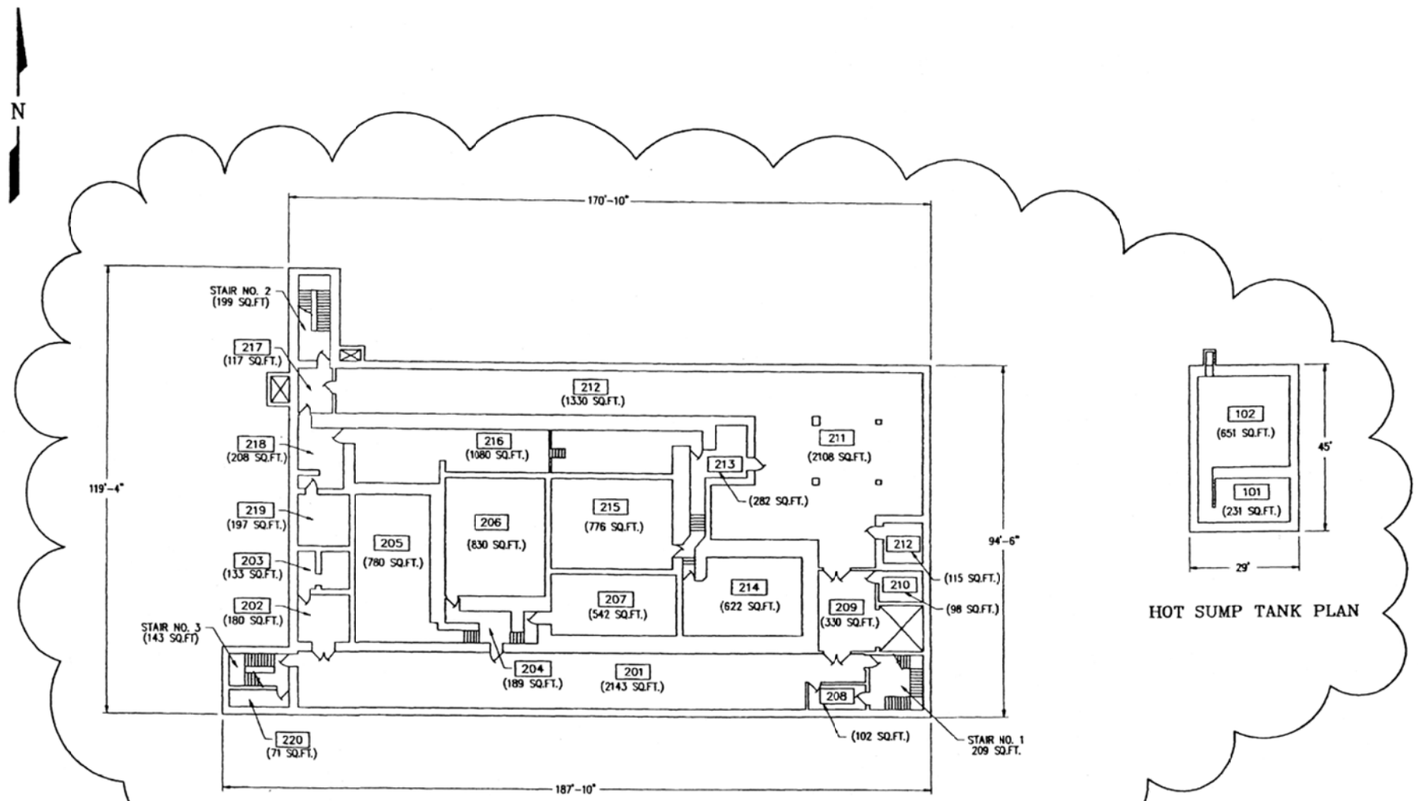

THIRD LEVEL FLOOR PLAN

HOT SUMP TANK PLAN

NO.	REVISIONS	DRAFTER DATE	CHECKER DATE	DFTG SUPV DATE	SYS ENGR DATE
2	REVISED PER DCN #145677-AB23	MAW 05-07-93	DKG 5-10-93	[illegible]	CPF 6/6/93
1	REVISED AND REDRAWN PER DCN #122620-AB26	ALR 1-29-98	GTW 1-29-98	GTW 1-29-98	NPW 1-29-98

Westinghouse Idaho Nuclear Company Inc.
IDAHO CHEMICAL PROCESSING PLANT
IDAHO FALLS, IDAHO

FOR
U.S. DEPARTMENT OF ENERGY
IDAHO OPERATIONS OFFICE
IDAHO FALLS, IDAHO

CONTROLLED DOCUMENT CLASS I

APPROVALS	SIGNATURE	DATE
DRAFTER		
CHECKER		
DFTG SUPV		
DESIGN ENGR		
SYS ENGR		
PROJ MGR		

SCALE 1/16 = 1FT 0
DATE ISSUED

CPP-659

SPACE OCCUPANCY

3RD LEVEL & HOT SUMP

NC

DWG. SIZE	INDEX CODE NUMBER AREA	DWG TYPE	CL	ORIG.	DRAWING NUMBER	REV.
D	200	0659	03	936	057812	2

JOB NUMBER 122620 TAKEN FROM DRAWING NO. REDRAWN

EDC

CAD GENERATED - AU UILJ TOCAD

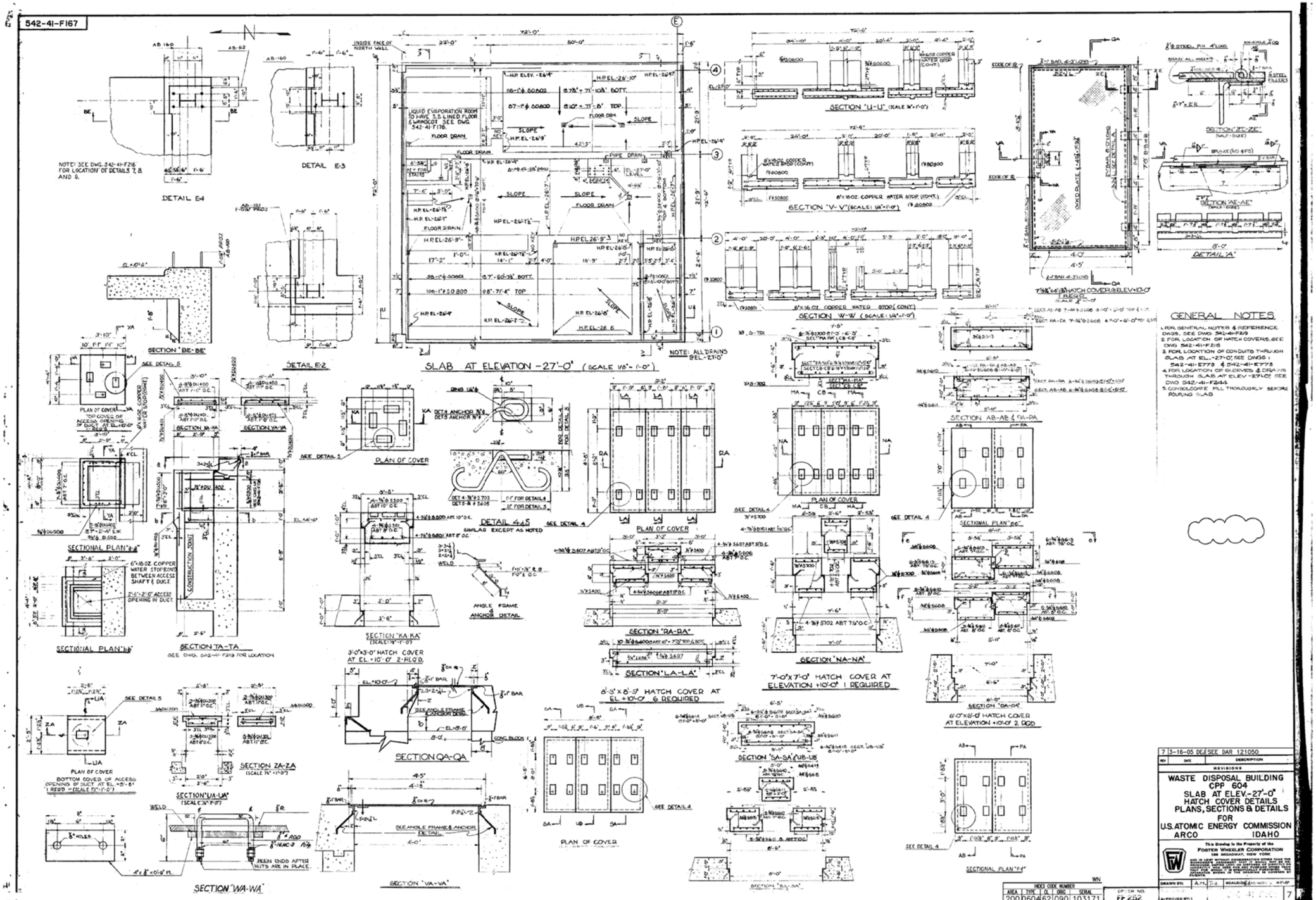

GENERAL NOTES

1. FOR GENERAL NOTES & REFERENCE DWGS, SEE DWG. 542-41-F219
2. FOR LOCATION OF HATCH COVERS, SEE DWG 542-41-F216
3. FOR LOCATION OF CONDUITS THROUGH SLAB AT EL.-27'-0", SEE DWGS: 542-41-E773 & 542-41-E773
4. FOR LOCATION OF SLEEVES & DRAINS THROUGH SLAB AT ELEV -27'-0", SEE DWG 542-41-F244
5. CONSOLIDATE FILL THOROUGHLY BEFORE POURING SLAB

542-41-F176

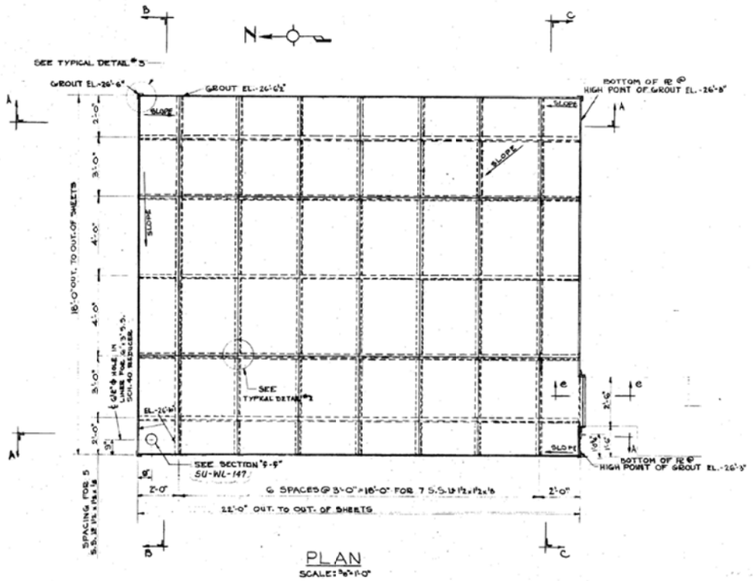

PLAN
SCALE: 3/8"=1'-0"

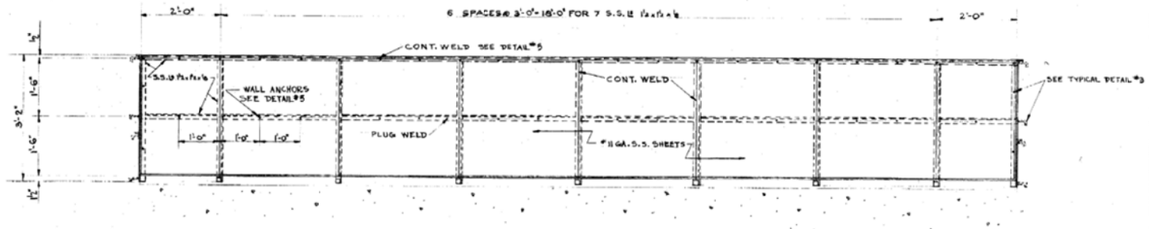

SECTION "A-A"
SCALE: 3/4"=1'-0"

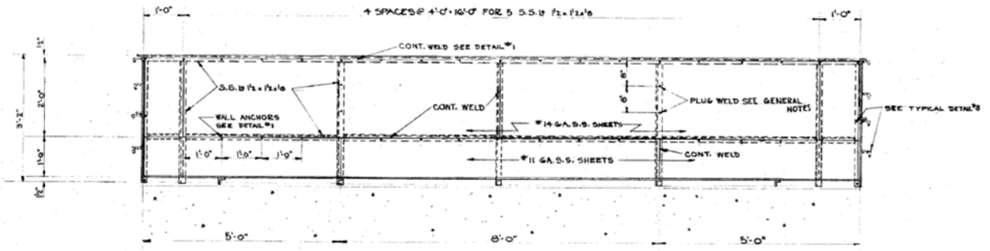

SECTION "B-B"
SCALE: 3/4"=1'-0"

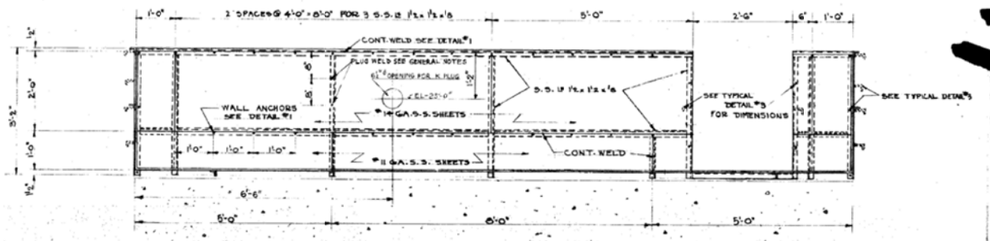

SECTION "C-C"
SCALE: 3/4"=1'-0"

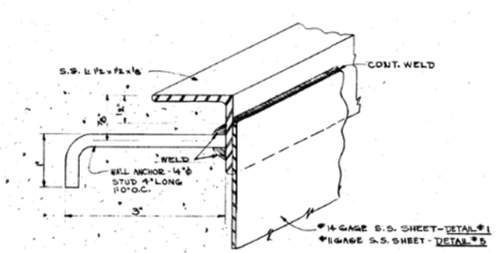

DETAIL #1 & #5
SCALE: FULL SIZE

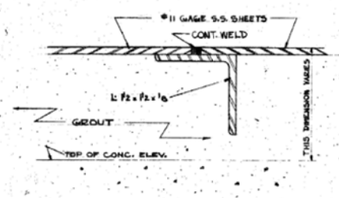

TYPICAL DETAIL #2
SCALE: FULL SIZE

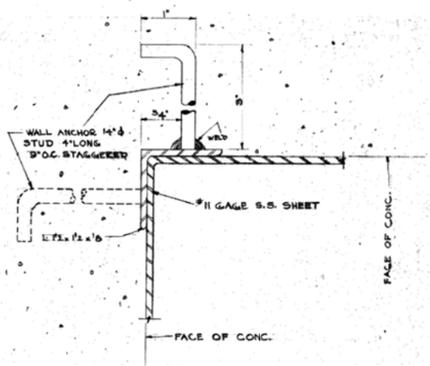

TYPICAL DETAIL #3
SCALE: FULL SIZE

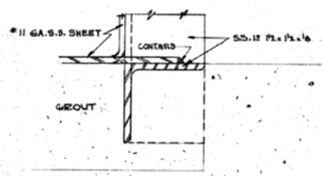

SECTION "E-E"
SCALE: FULL SIZE

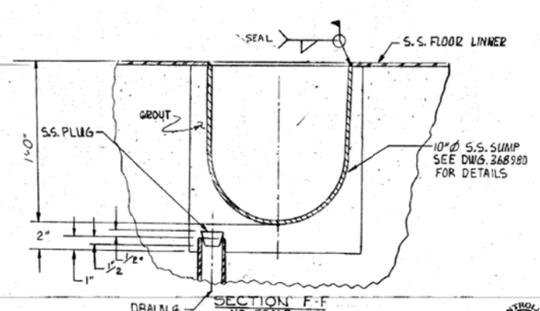

GENERAL NOTES

1. FOR GENERAL NOTES & STEEL SPECIFICATIONS SEE FOSTER WHEELER SPECIFICATIONS.
2. PLUG WELD ALL STAINLESS SHEETS TO I2" @ 9" O.C. MAX., WHERE NOT CONTINUOUSLY WELDED.
3. USE STAINLESS STEEL L 12"x12"x5/8 & 3/16ø S.S. + 11 GAGE STAINLESS STEEL SHEETS ON CELL FLOOR & WALLS, EXCEPT WHERE NOTED.

[redacted]

REFERENCE DRAWINGS

KEY PLOT PLAN	541-G1-G1
AREA PLOT PLAN	541-G1-G10
CONCRETE DRAWING	542-41-F167
BILL OF MATERIAL	542-48-F861

[redacted]

APPROVALS

SIGNATURE AND DATE		
OAK RIDGE	FOSTER WHEELER	IDAHO
9-10-57		

RCRA CONTROLLED DRAWING

AS BUILT

LETTER	DATE	DESCRIPTION
6	6-24-58	REVISED PER W.O. 6525 & ARCO W.N.
5	2-21-58	PER D/N # 195753-AE-1

REVISIONS

WASTE DISPOSAL BUILDING
CPP 604
LIQUID EVAPORATION ROOM
S.S. FLOOR & WALL LINING
FOR
U.S. ATOMIC ENERGY COMMISSION
ARCO IDAHO

This Drawing is the Property of the FOSTER WHEELER CORPORATION 165 BROADWAY, NEW YORK
AND IS LENT WITHOUT CONSIDERATION UPON THAN THE RECIPIENT'S AGREEMENT THAT IT SHALL BE NOT REPRODUCED, COPIED NOR LOANED OR DISPOSED OF DIRECTLY OR INDIRECTLY NOR USED FOR ANY PURPOSE OTHER THAN THAT FOR WHICH IT IS FURNISHED EXCEPT UNDER WRITTEN PERMISSION. USE OF THE INFORMATION SHOWN ON THIS DRAWING IS COVERED BY PATENTS.

DRAWN BY:	DECK	T-25-58	SCALE: AS NOTED @ 1'-0"
CHECKED BY:			542-41-F176 | 6
APPROVED BY:			

ORDER NO. FF 252

CONTROLLED DOCUMENT CLASS I

WL

031501

542-41-F721

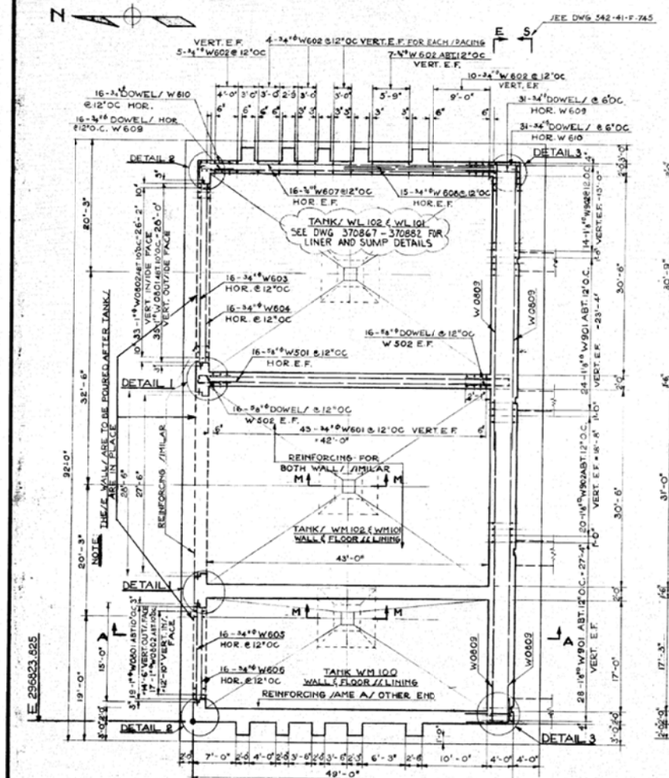

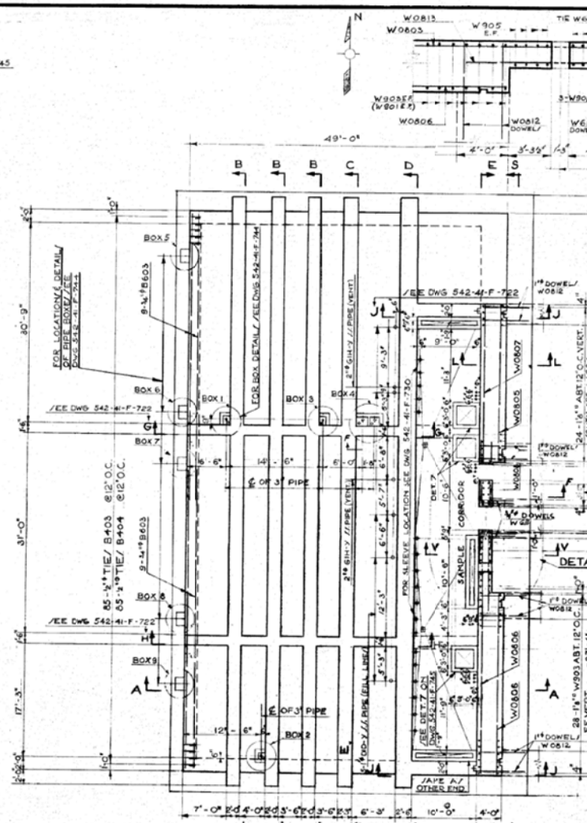

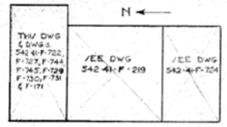

KEY PLAN

GENERAL NOTE/

1. FOR GENERAL NOTE/ (CONCRETE /SPECIFICATION/ /EE FOSTER WHEELER /SPECIFICATION/ /EE WHEELER ELEVATION/ 13 ELEV. 491'.
2. WHERE REINFORCING ROD/ INTERFERE WITH PIPE/ CONDUIT/ OR INVERT/ SHIFT OR BEND REINFORCING ROD/
3. U/E 6X16 OZ. COPPER WATER-/TOP/ AT ALL CONTR./JOINTS/ WHERE CONCRETE U/ ADJACENT TO EARTH.
4. FOR DETAIL OF INVERT/ /EE TYP DETAIL ON DWG 542-41-F-171
5. /SHIFT RFG. BAR/ TO ANCHOR INVERT/ WHERE NEED/.
6. ALL PIPES EMBEDDED IN CONC. WALL OR FLOOR /SHALL BE COATED/ OTHERWISE NOTED/ COAT // PIPE/ WITH 3 COATS OF AMERCOAT 33
7. ALL CONCRETE SURFACES/ ARE TO BE PAINTED ON THE INSIDE WITH THREE COATS OF AMERCOAT 33 AFTER SURFACES/ HAVE BEEN PREPARED IN ACCORDANCE WITH CONCR. (REINF. CONCRETE /SPECIFICATION/
8. FOR NOTE/ FOR /SEE ELEC./ /EE /SEE/ DWG /SEE/ REVE DETAIL/ /EE DWG 542-41-F-149
9. FOR CONDUIT/ IN FLOOR /LAB/ (WALL/ /EE ELECT. DWG/
10. ALL UNDERGROUND PIPING/ TO BE /EE/ IN PLACE (TESTED BEFORE CONCRETE U/ POURED
11. THE FLAT TOP AREA OF THE ROOF OF /STORAGE TANK ROOM (EL.- 22'-0" ONLY (/SAMPLE CORR. ROOF (EL.- 10'-0" TO BE PAINTED WITH ONE COAT OF MONO/SEAL /SILICONE /SEALANT NO. 621.

QUANTITIES/

1. 2400 CU. YDS. CONCRETE
2. REINFS. BAR/ A/ DETAILED
3. 1000 FT. 6"x16 OZ COPPER WATER /TOP
4. 24-1"ø "LIFTING RING/ /SEE DETAIL/
5. 3-1"ø EYE BOLT/ /EE DETAIL/
6. 3-6"x6"x1/2" PLATE/ FOR EYE BOLT/
7. 190 FT.- L 2"x 2"x 1/4" /SEE DETAIL/
8. 200 R-/-X (1/4"ø) ANCHOR/ TO L /SEE DETAIL/

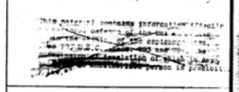

REFERENCE DRAWING/

1. KEY PLOT PLAN	542-61-61
2. AREA PLOT PLAN	542-61-G6
3. /ECTION/ & DETAIL/	542-41-F-722
4. ——"——"——	542-41-F-745
5. PIPE BOX & DETAIL/	542-41-F-744
6. /LEEVE LOCATION/	542-41-F-729
7. ——"——"——	542-41-F-735
8. ——"——"——	542-41-F-751
9. RFG ROD DETAIL/	542-41-F-752
10. EVAP./STORAGE TANK PIPING	542-41-P-754
11. ——"——"—— /ECTION/	542-41-P-753
12. ——"——"—— /ECTION/	542-41-P-751
13. UNDERGROUND DRAINAGE /WT	542-41-P-761
14. /SAMPL. CORR. PIPING	542-41-P-758
15. ——"——"——	542-41-P-759
16. YARD PIPING	542-41-P-750
17. ——"——"——	542-41-P-751
18. //FLOOR & WALL LINING	542-41-F-735
19. GENERAL ARRANGEMENT CPP 604	542-40-F-220
20. INVERT LOCATION/ FOR /STORAGE TANK ROOM	542-41-F-171
21. YARD PIPING PROFILE/ BLDG. TO EVAP BLDG.	542-41-P-74
22. YARD PIPING PROFILE BLDG TO EVAP. BLDG. /ECT.	542-41-P-741
23. /LEEVE DETAIL/	542-41-F-141
24. ELECTR. DWG.	542-41-E-760
25. ——"——"——	542-41-E-771
26. BILL OF MATERIAL	542-42-F-841

[redacted]

APPROVALS

SIGNATURE AND DATE		
OAK RIDGE	FOSTER WHEELER	IDAHO

AS BUILT

RCRA CONTROLLED DRAWING

LETTER	DATE	REVISIONS
13	10/95	REVISED PER DCN 10029486
12	6-24-94	REVISED PER DCN 10013
11	1-7-75	SEE DCN

WASTE TREATMENT BLDG.
CPP 604
FOUNDATION & ENCLOSURE FOR STORAGE TANKS
PLANS, SECTIONS & DETAILS
FOR
U.S. ATOMIC ENERGY COMMISSION
ARCO IDAHO

This Drawing is the Property of the FOSTER WHEELER CORPORATION 165 BROADWAY, NEW YORK AND IS SENT WITHOUT CONSIDERATION UPON THE UNDERSTANDING AGREEMENT THAT IT SHALL NOT BE REPRODUCED, COPIED, LENT OR DISPOSED OF DIRECTLY OR INDIRECTLY NOR USED FOR ANY PURPOSE OTHER THAN THAT FOR WHICH IT IS SPECIFICALLY FURNISHED AND THAT THE INFORMATION SHOWN IS THE DRAWING IS COVERED BY PATENTS.

CONTROLLED DOCUMENT CLASS I

DRAWN BY:	E.T.	SCALE:
CHECKED BY:	JME	542-41-F72113
APPROVED BY:		

ORDER NO. FF252

INDEX CODE NUMBER
200 C604 62 291 103530

103530

THIS DRAWING SUPERSEDES

103530

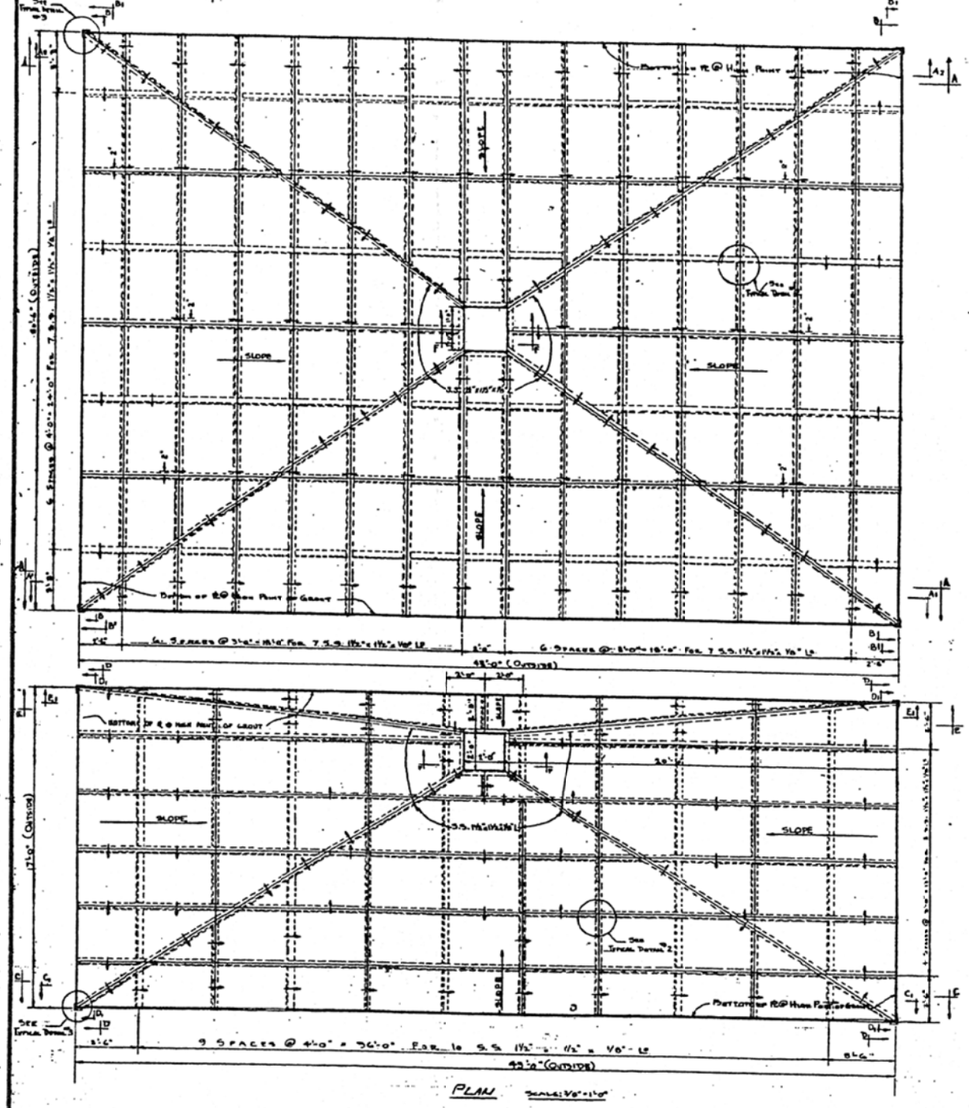

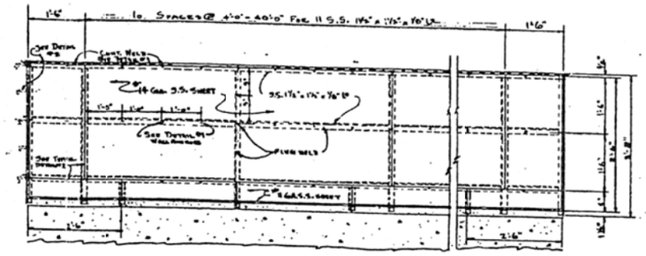

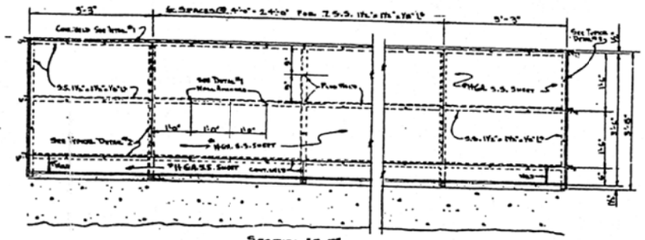

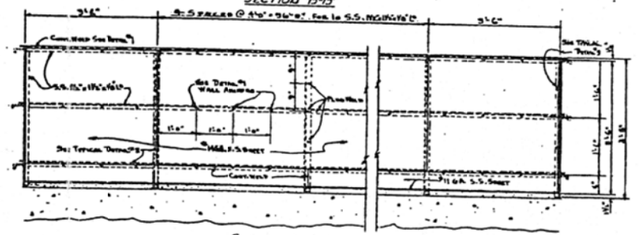

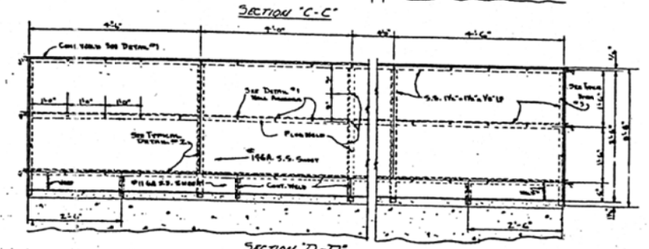

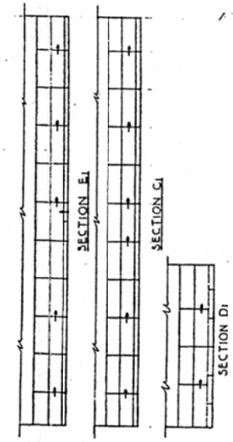

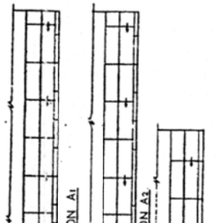

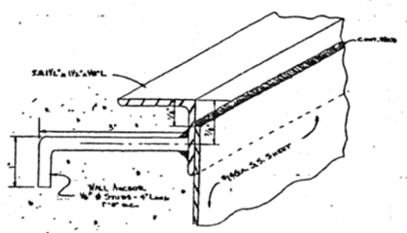

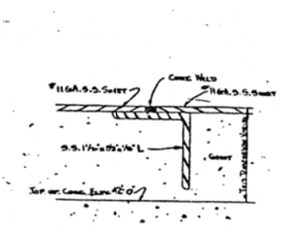

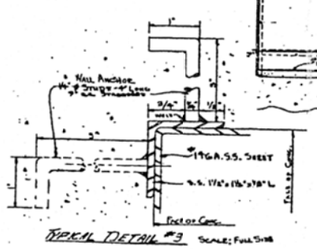

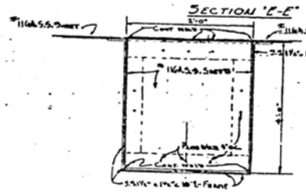

GENERAL NOTES

1- FOR GENERAL NOTES & STEEL SPECIFICATIONS SEE FOSTER WHEELER SPECS.

2- PLUG WELD ALL STAINLESS STEEL SHEETS TO ℄ @ 3'0" O.C. MAX. WHERE NOT CONTINUOUSLY WELDED.

3- USE 1⅛"x1⅛"x⅛" @ 5'0" X 8'0" W/ 14 GA. S.S. SHEETS ON CELL FLOORS.

4- USE 1⅛"x1⅛"x⅛" @ 5'0" X 8'0" W/ 14 GA. SS SHEETS ON CELL WALLS.

5- UNLESS OTHERWISE NOTED, SYMBOL (—) INDICATES GAS PASSAGEWAY PROVIDED MIDWAY BETWEEN INTERSECTIONS OF ANGLES.

REFERENCE DRAWINGS

KEY PLOT PLAN - 541-61-G1
AREA PLOT PLAN - -G6
CONCRETE DWG. - -F721
BILL OF MATERIAL - 542-42-F961
FOR WL-101/102 VAULT SEE DWG - 370847 - 370882

[redacted]

THIS DRAWING CLASSIFIED AS [redacted]

APPROVALS
SIGNATURE AND DATE

OAK RIDGE	FOSTER WHEELER	IDAHO
for Pamela 9-10-57	4-30-57	

ACPA CONTROLLED DRAWING

AS BUILT

LETTER	DATE	DESCRIPTION
7	10/95	REVISED PER DCN 16-0559-A563
6	6/8/94	REVISED PER DCN 16-0553-A8201
5	1-6-75	SEE DCN

REVISIONS

WASTE TREATMENT BLDG.
CPP 604
STORAGE TANK ENCLOSURE
S.S. FLOOR & WALL LINING
FOR
U.S. ATOMIC ENERGY COMMISSION
ARCO IDAHO

This Drawing is the Property of the FOSTER WHEELER CORPORATION 165 BROADWAY, NEW YORK

INFORMATION ONLY

CONTROLLED DOCUMENT

INDEX CODE NUMBER				ORDER NO.
AREA (BLDG.)	SYSTEM	SEQ.	SHEET	
200	0604	291	103503	FF 252

DRAWN BY	BKC	4-4-57	SCALE: 1/8" & 1/4" & F.S. WHERE
CHECKED BY	WL	4-12-57	54241-F 735-7
APPROVED BY	[illegible]	4-17-57	

10554

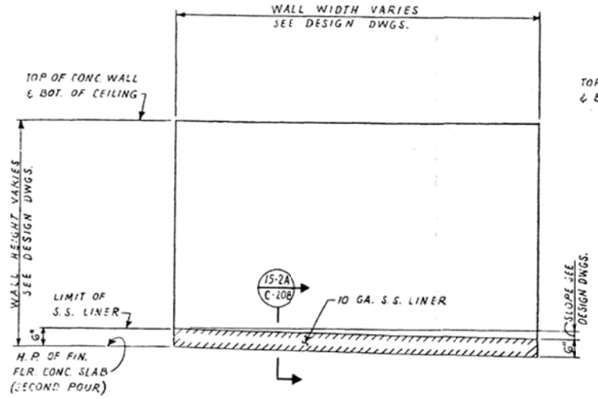

ELEVATION

TYP. WALL LINER DETAIL 1-2A C-207

SCALE NONE

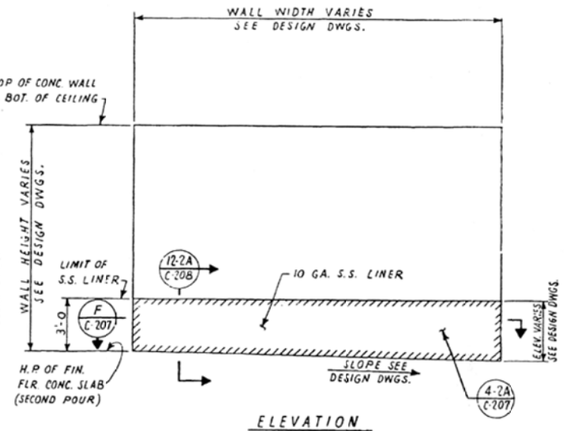

ELEVATION

TYP. WALL LINER DETAIL 2-2A C-207

SCALE NONE

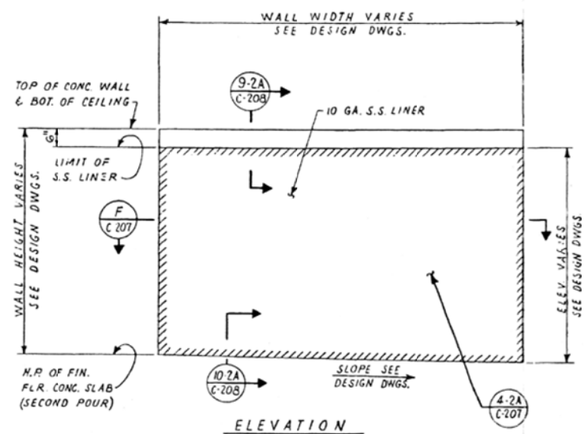

ELEVATION

TYP. WALL LINER DETAIL 3-2A C-207

SCALE NONE

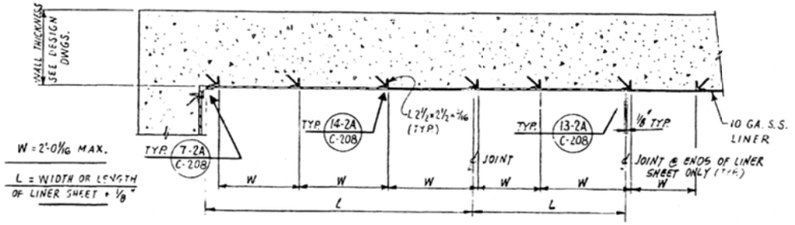

SECTION F

SCALE NONE

C-207

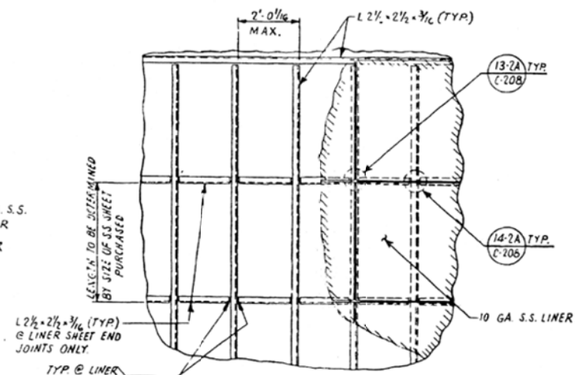

TYP. LINER SCREED ARRANGEMENT 4-2A C-207

SCALE NONE

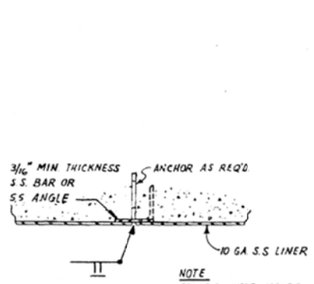

NOTE

ALL S.S. LINER WELDS MUST BE BACKED-UP WITH S.S.-NO WELDING AGAINST CONC. OR CARBON STEEL ALLOWED.

WELD BACK-UP DETAIL

SCALE: NONE

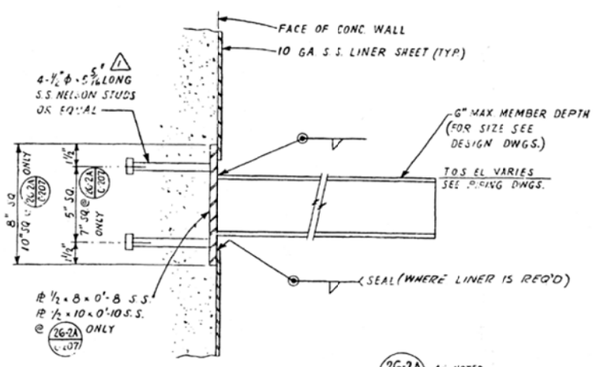

ELEVATION

TYP. EMBEDDED PL DETAIL

26-2A C-207 AS NOTED

5-2A C-207 AS SHOWN

SCALE 3" = 1'-0

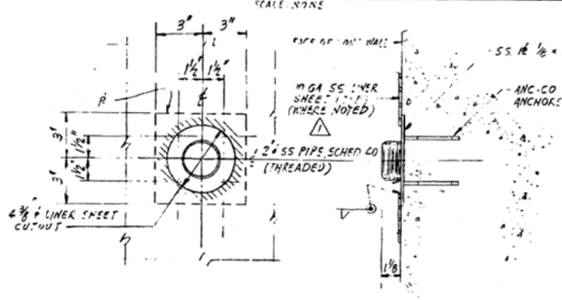

ELEVATION

EMBED SUPPORT FOR LIGHT FIXTURE

SIDE ELEVATION

6-2A C-207

SCALE 3" = 1'-0

GENERAL NOTES:

1. FOR MATERIAL SPECIFICATIONS SEE SP-453504-20-2.
2. ALL STAINLESS STEEL WELDING TO BE PER SPECIFICATION SP-453504-90-13.
3. ALL REFRACTORY ANCHORS TO BE STAINLESS STEEL ANC-CO AR-805-F-4 OR EQUAL @ 15" O.C. UNLESS NOTED OTHERWISE.
4. ALL WELDS SHALL BE EXAMINED IN ACCORDANCE WITH SPECIFICATIONS SP-453504-90-13 & SP-453504-20-2.

LEGEND:

S.S. DENOTES STAINLESS STEEL.
H.P. DENOTES HIGH POINT.
L.P. DENOTES LOW POINT.
B.O.P. DENOTES BOTTOM OF PIPE.
DENOTES SPOT WELD. (GAS TUNGSTEN ARC WELD)

REVISED APPROVED FOR CONSTRUCTION

ALLIED CHEMICAL CORPORATION
IDAHO CHEMICAL PROGRAMS - OPERATIONS OFFICE
IDAHO FALLS, IDAHO

THIS DOCUMENT IS RELEASED [illegible] AND SUBSEQUENTLY CONTROLLED IN ACCORDANCE WITH ACC STANDARD PRACTICES.

IN PLANT CODE NCC	BY	DATE
DRAWN	R. DIENAS	11-1-76
CHECKED	W. PAULE	12-1-76
APPROVED	[illegible]	[illegible]
APPROVED	J.H.	12-14-76
APPROVED	[illegible]	[illegible]
APPROVED	[illegible]	[illegible]
ACC APPROVED	[illegible]	1-1-77

INDEX CODE NUMBER: 2.00.06.59.62.287.132356

SCALE AS NOTED

DATE 7-77

NO.	DATE	DESCRIPTION	BY
1	12-77	AS INDICATED BY △ PER DCN NO. 33-1	—
	7-77	ISSUED FOR FINAL	

REVISIONS

CPP AREA BLDG. NO. 659

STAINLESS STEEL LINER & EMBEDS STANDARD DETAILS

NEW WASTE CALCINING FACILITY

FLUOR ENGINEERS AND CONSTRUCTORS, INC. LOS ANGELES, CALIFORNIA

FOR U.S. ENERGY R&D ADMINISTRATION IDAHO OPERATIONS OFFICE IDAHO FALLS, IDAHO

DWG. NO. 1495-CPP-659-C207 REV. 1

FLUOR CONTRACT 53504

132356

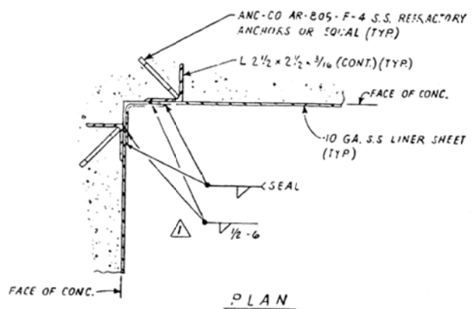

PLAN

TYP. VERTICAL WALL CORNER DETAIL 7-2A C-208

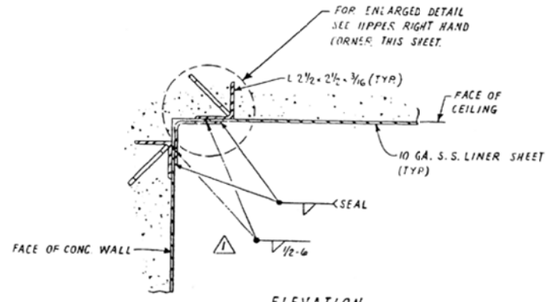

ELEVATION

TYP. WALL-CEILING INTERSECTION DETAIL WITH LINER @ CEILING 8-2A C-208

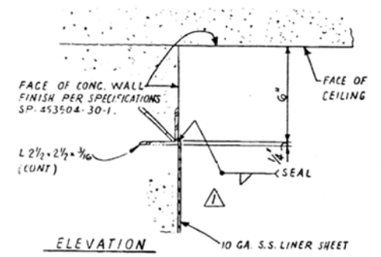

ELEVATION

TYP. WALL-CEILING INTERSECTION DETAIL WITHOUT LINER @ CEILING 9-2A C-208

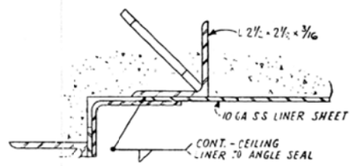

ENLARGED DETAIL

SCALE: NONE

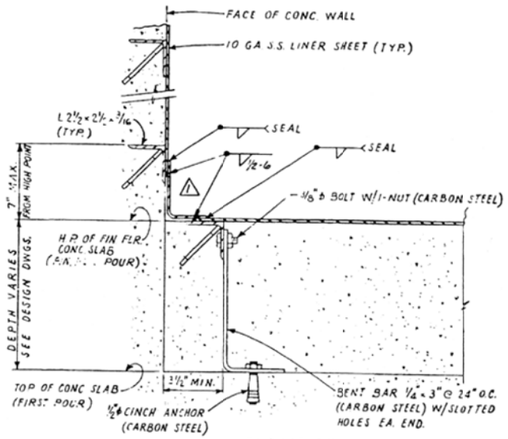

ELEVATION

TYP. WALL - FLOOR INTERSECTION DETAIL 10-2A C-208

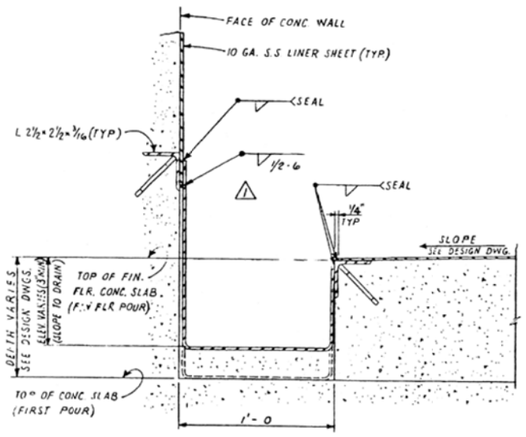

ELEVATION

FLOOR DRAIN GUTTER DETAIL 11-2A C-208

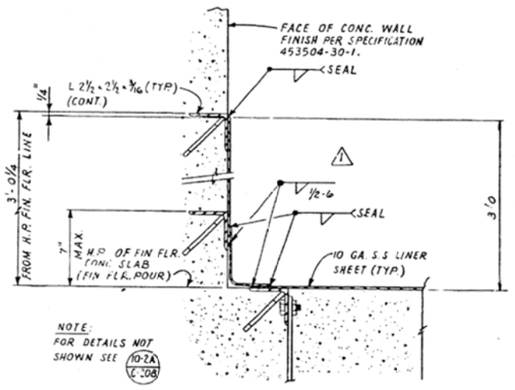

ELEVATION

TYP. WALL-FLOOR INTERSECTION DETAIL 12-2A C-208

NOTES:

1. FOR GENERAL NOTES & LEGEND SEE DWG. C-207.

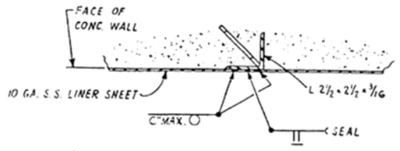

TYP. WELDS @ EDGE OF SHEETS 13-2A C-208

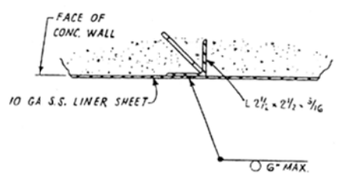

TYP. WELDS @ INTERMEDIATE POINTS OF SHEETS 14-2A C-208

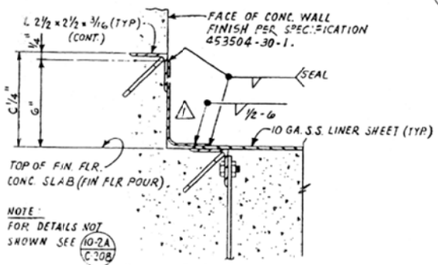

ELEVATION

TYP. WALL-FLOOR INTERSECTION DETAIL 15-2A C-208

SCALE 0 3" 6" 9" 12" 3"=1'-0

ALLIED CHEMICAL CORPORATION
IDAHO CHEMICAL PROGRAMS - OPERATIONS OFFICE
IDAHO FALLS, IDAHO

THIS DOCUMENT IS RELEASED 1-2-77 AND SUBSEQUENTLY CONTROLLED IN ACCORDANCE WITH ACC STANDARD PRACTICES.

NO.	DATE	DESCRIPTION	BY	APP'D
1	12-20-76	REVISED PER DCN 5827-1		

REVISIONS

CPP AREA BLDG. NO. 659

STAINLESS STEEL LINER & EMBEDS STANDARD DETAILS

NEW WASTE CALCINING FACILITY

FLUOR
ENGINEERS AND CONSTRUCTORS INC.
LOS ANGELES, CALIFORNIA

U.S. ENERGY R&D ADMINISTRATION
IDAHO OPERATIONS OFFICE
IDAHO FALLS, IDAHO

IN PLANT CODE	NCC	
	BY	DATE
DRAWN	T. NOENAS	11-26-76
CHECKED	W. PAULE	12-1-76
APPROVED	T. KEY	12-1-76
APPROVED	HH	12-14-76
APPROVED		
APPROVED		12-15-76
ACC APPROVED		12-1-77
SCALE	3" = 1'-0	
DATE		

INDEX CODE NUMBER: 200059962 267 1323 00

ENG NO. 1495-CPP-659-C-208 REV 1

PKG 12A

FLUOR CONTRACT 4-3504

132359

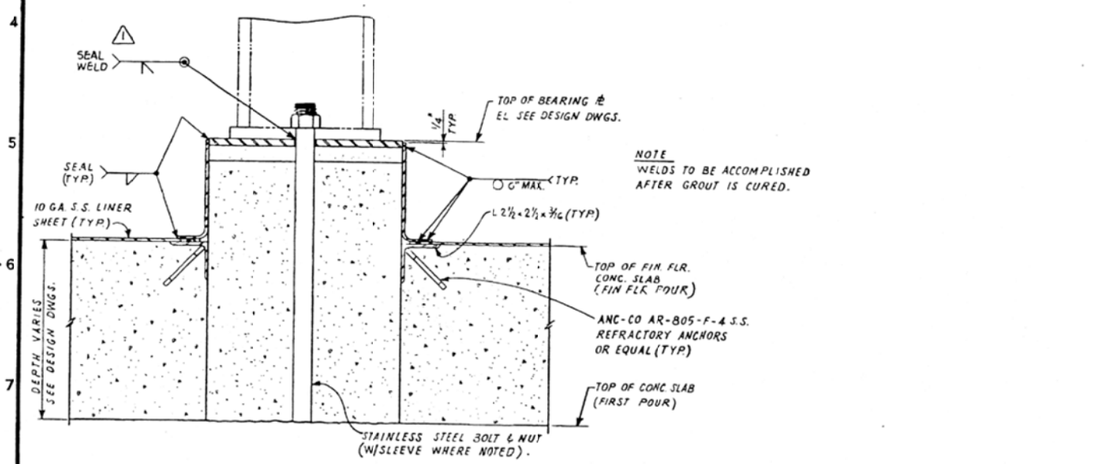

NOTE
WELDS TO BE ACCOMPLISHED AFTER GROUT IS CURED.

TYP. ANCHOR BOLT & PIER DETAIL (25-2A / C-210)

SCALE 3" = 1'-0

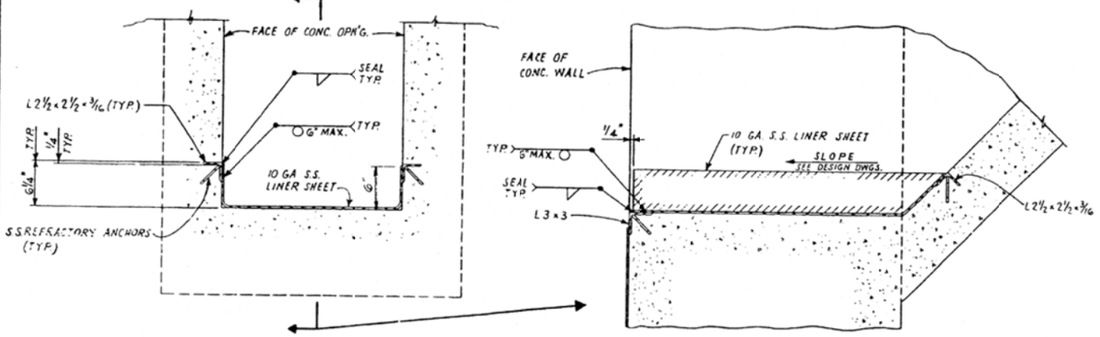

RETURN AIR DUCT LINER DETAIL (27-2A / C-210)

SCALE 1½" = 1'-0

NOTES:
1. FOR GENERAL NOTES & LEGEND SEE DWG. C-207.

1	11-11-80	REVISED PER DCN-AB-017
0		ISSUED APPROVED FOR CONSTR.
NO.	DATE	DESCRIPTION

REVISIONS

CPP AREA — BLDG. NO. 659

STAINLESS STEEL LINER & EMBEDS
STANDARD DETAILS
NEW WASTE CALCINING FACILITY

FLUOR
ENGINEERS AND CONSTRUCTORS, INC.
LOS ANGELES, CALIFORNIA

FOR
U.S. ENERGY R&D ADMINISTRATION
IDAHO OPERATIONS OFFICE
IDAHO FALLS, IDAHO

DWG NO. 1495-CPP-659-C 210 — REV. 1

ALLIED CHEMICAL CORPORATION
IDAHO CHEMICAL PROGRAMS - OPERATIONS OFFICE
IDAHO FALLS, IDAHO

THIS DOCUMENT IS RELEASED 1-7-77 AND SUBSEQUENTLY CONTROLLED IN ACCORDANCE WITH ACC STANDARD PRACTICES.

IN PLANT CODE: NCC

	BY	DATE
DRAWN	E DUENAS	11-11-76
CHECKED	W PAULE	12-3-76
APPROVED		
APPROVED	HH	12-14-76
APPROVED		
APPROVED		12-14-76
ACC APPROVED		1-7-77

SCALE AS NOTED

INDEX CODE NUMBER: 200 0659 62 281 132361

PKG #2A

FLUOR CONTRACT 4[illegible]04

13361

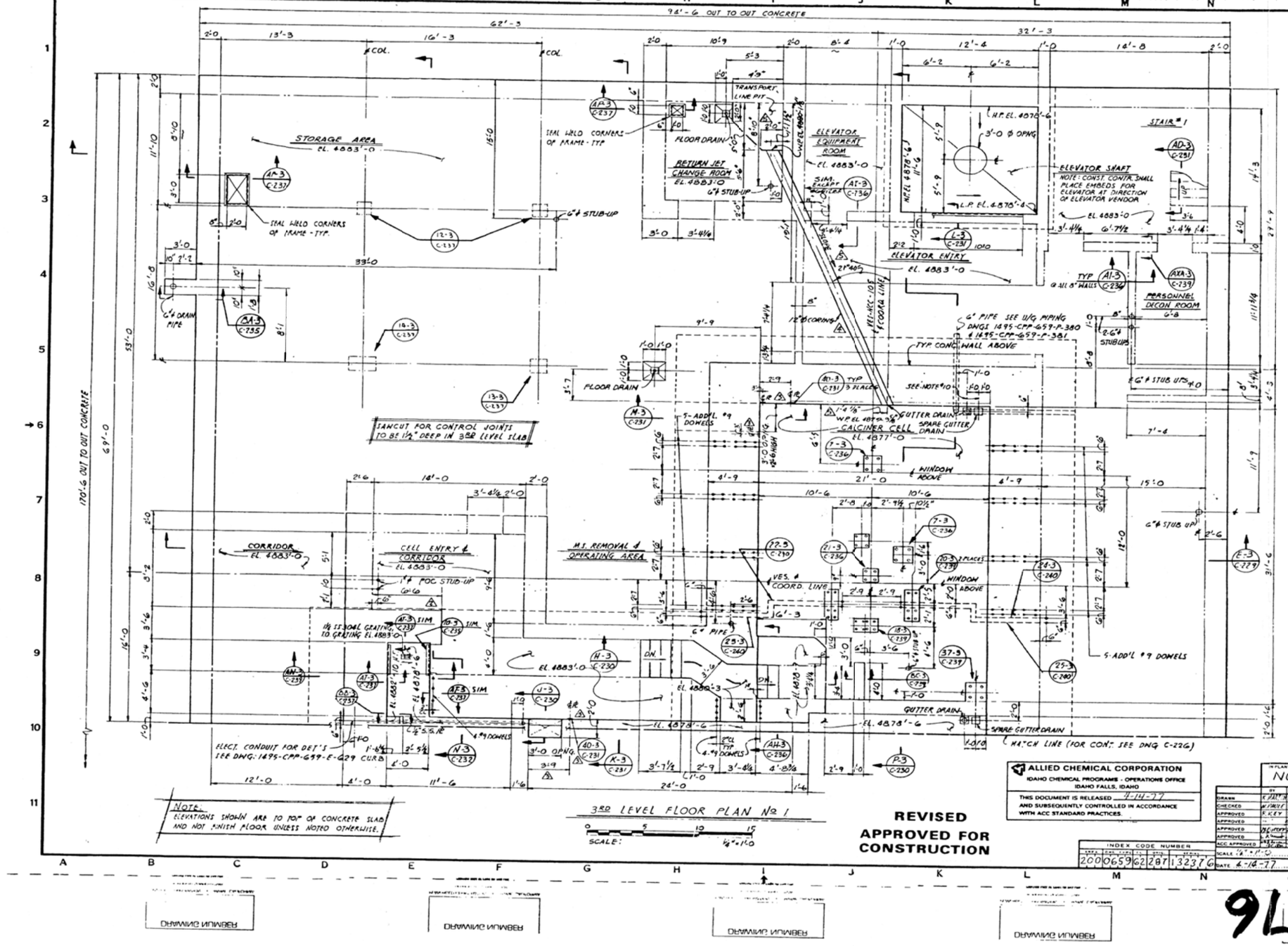
94'-6 OUT TO OUT CONCRETE
62'-3
32'-3
170'-6 OUT TO OUT CONCRETE
69'-0
53'-0
STORAGE AREA
EL. 4883'-0
SEAL WELD CORNERS OF FRAME - TYP.
6"ϕ STUB-UP
6"ϕ DRAIN PIPE
SAWCUT FOR CONTROL JOINTS TO BE 1½" DEEP IN 3RD LEVEL SLAB
TRANSPORT LINE PIT
FLOOR DRAIN
RETURN JET CHANGE ROOM EL. 4883'-0
ELEVATOR EQUIPMENT ROOM EL. 4883'-0
SIM. EXCEPT AS NOTED
ELEVATOR ENTRY EL. 4883'-0
ELEVATOR SHAFT
NOTE: CONST. CONTR. SHALL PLACE EMBEDS. FOR ELEVATOR AT DIRECTION OF ELEVATOR VENDOR
H.P. EL. 4878'-6
L.P. EL. 4878'-6
3'-0 ϕ OPNG
STAIR #1
PERSONNEL DECON ROOM
6"ϕ STUB UPS
TYP. CONC. WALL ABOVE
GUTTER DRAIN
SPARE GUTTER DRAIN
CALCINER CELL DRAIN EL. 4877'-0
WP EL. 4879'-3½
WINDOW ABOVE
5-ADDL #9 DOWELS
REFERENCE 105 COORD LINE
VES. & COORD LINE
6" PIPE SEE W/G PIPING DWGS 1695-CPP-659-P-380 & 1695-CPP-659-P-381
CORRIDOR EL. 4883'-0
CELL ENTRY & CORRIDOR EL. 4883'-0
M.I. REMOVAL & OPERATING AREA
1" ϕ POC STUB-UP
1½ IS SOAL GRATING TO GRATING EL. 4883'-0
ELECT. CONDUIT FOR DET'S SEE DWG: 1695-CPP-659-E-629 CURB
3'-0 OPNG.
EL. 4878'-6
EL. 4880'-3
MATCH LINE (FOR CONT. SEE DWG C-226)
3RD LEVEL FLOOR PLAN NO 1
SCALE: ¼"=1'-0
Note: ELEVATIONS SHOWN ARE TO TOP OF CONCRETE SLAB AND NOT FINISH FLOOR UNLESS NOTED OTHERWISE.
REVISED APPROVED FOR CONSTRUCTION
ALLIED CHEMICAL CORPORATION
IDAHO CHEMICAL PROGRAMS - OPERATIONS OFFICE
IDAHO FALLS, IDAHO
THIS DOCUMENT IS RELEASED 4-14-77 AND SUBSEQUENTLY CONTROLLED IN ACCORDANCE WITH ACC STANDARD PRACTICES.
INDEX CODE NUMBER
200 0659 62 207 13237 6
IN PLANT CODE NC A
DRAWN K.TITT 3-17-77
CHECKED W.TINLEY 3-24-77
APPROVED R.KEY 3-24-77
APPROVED — 3-28-77
APPROVED J.E. Hoffer 3-28-77
APPROVED A.Powell 3-28-77
ACC APPROVED [illegible] 4-14-77
SCALE ¼"=1'-0
DATE 4-14-77
CPP AREA BLDG. NO. 659
382 LEVEL FLOOR SLAB PLAN NO 1 CALCINING AREA NEW WASTE CALCINING FACILITY
FLUOR ENGINEERS AND CONSTRUCTORS, INC. LOS ANGELES, CALIFORNIA
FOR U.S. ENERGY R&D ADMINISTRATION IDAHO OPERATIONS OFFICE IDAHO FALLS, IDAHO
1695-CPP-659-C-225 REV 5
PKG #3
FLUOR CONTRACT 9555-04
KEY PLAN
SCALE: NONE
THIS DWG
DWG NO C-226 PLAN NO 2
DWG NO C-227 PLAN NO 3
FOR COORD SEE DWG CE-202
VESSEL & COORD LINE
REFERENCE COORD LINE
FOR ADDL NOTES SEE DWG C-226
GENERAL NOTES:
1. FOR CONCRETE SPECIFICATIONS SEE SP-453504-10-1
2. EMBEDDED ITEMS SHALL BE IN ACCORDANCE WITH THE FOLLOWING SPECIFICATIONS:
a. PIPE - SPECIFICATION SP-453504-50-3 LINE CLASS "AA"
b. CONDUIT - SPECIFICATION SP-453504-60-10.
c. STUDS, PLATES, & ANGLES FOR LINER - SPECIFICATION SP-453504-20-2.
d. ANCHOR BOLTS, PIPE SUPPORTS, & OTHER STRUCT. STEEL MEMBERS - SPECIFICATION SP-453504-20-3.
3. FOR STAINLESS STEEL LINER DETAILS SEE STANDARD DETAILS DWGS C-207 THRU C-210.
4. ALL ELECTRICAL CONDUIT TO BE IN PLACE BEFORE POURING CONCRETE. SEE ELECT. DWG. 1695-CPP-659-E-629
5. ALL EMBEDDED ELECTRICAL GROUNDING TO BE IN PLACE BEFORE POURING CONCRETE. SEE ELEC. DWGS 1695-CPP-659-E-241 THRU -251.
6. ALL INTERIOR CONCRETE SURFACES NOT COVERED WITH STAINLESS STEEL LINER SHALL HAVE A DECONTAMINABLE COATING IN ACCORDANCE WITH SPECIFICATION SP-453504-30-1.
7. FORM RELEASE AGENTS SHALL BE COMPATIBLE WITH PROTECTIVE COATING THAT WILL BE SUBSEQUENTLY USED PER ANSI N54.2-1972 REVISED & REDESIGNATED AS N.S.T.-1974
8. WATERSTOPS ARE REQ'D AT ALL CONSTRUCTION JOINTS IN EXTERIOR WALLS. MATERIAL SHALL BE A CONTINUOUS CARBON STEEL STRIP ¼" x 6" WITH BUTT WELDED ENDS & CORNERS.
9. FINISH NOSE TO BE STEEL ANGLE, FINISHED WITH CLASS ½" TOLERANCE PER SPECIFICATION SP-453504-10-1
10. ALL UNDERGROUND PIPING PER DWGS 1695-CPP-659-P-376 THRU-383 TO BE IN PLACE BEFORE POURING CONCRETE.
11. 3/4" MAXIMUM AGGREGATE SIZE IN BEAM & HOT SUMP REMOVAL CELL, SEE SECT. "B-3" DWG. C-226
12. FOR ELEVS. TO BOT. OF SLAB SEE DWGS C-212, C-213 & C-214.
13. LAP SPLICES & WALL DOWELS SHALL BE PER CLASS "C" TABLES 2.9G & 2.9H ACI 315-74 LATEST EDITION UNLESS NOTED OTHERWISE (FC = 4000).
5 7-8-77 REVISED PER ECR-1860 EXCEPT AS NOTED ECN-NA-1037
4 5-1-77 REVISED PER ECR 803
3 [illegible] REVISED PER DCN-175-1
2 4-6-77 REVISED PER DCN 93-1 & 101-1
1 [illegible]
NO. DATE DESCRIPTION BY APPROVED
REVISIONS

1323716

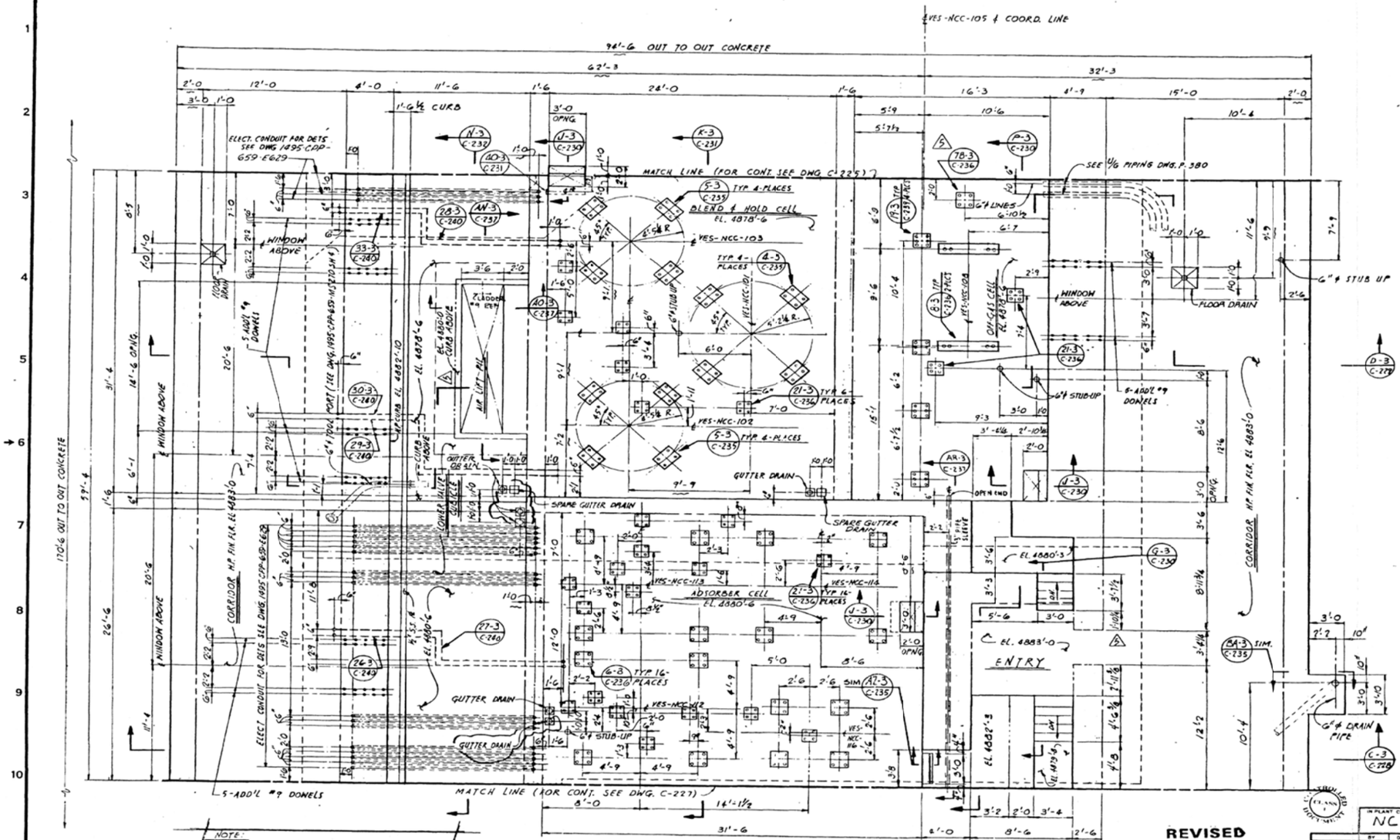

NOTE:
ELEVATIONS SHOWN ARE TO TOP OF CONCRETE SLAB AND NOT FINISH FLOOR UNLESS NOTED OTHERWISE

3RD LEVEL FLOOR PLAN No 2

SCALE: 1/4"=1'-0

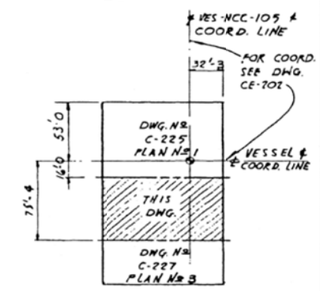

KEY PLAN

SCALE: NONE

GENERAL NOTES (CONTINUED FROM DWG. C-225)

14. TYP. RE-BAR CLEARANCES SHALL BE: SLABS- 2" CLR. TO TOP BARS & 2" CLR. TO BOT. BARS; WALL DOWELS- 2 3/4" CLR. TO EA. FACE OF EXT. WALLS & 3 3/4" TO EA. FACE OF INT. WALLS; UNLESS NOTED OTHERWISE.
15. CONSTRUCTION CONTRACTOR MAY ADD DEVICES FOR SUPPORTING EMBEDDED AND OTHER ITEMS TO FACILITATE CONSTRUCTION. ITEMS PROVIDED SHALL BE MADE OF THE SAME MATERIAL AS THE EMBEDDED ITEM.
16. ALL STRUCTURAL SHAPES (ANGLES, ANCHORS, STUDS, PL'S, ETC.) SHALL BE A36 STEEL UNLESS NOTED OTHERWISE.
17. FOR TYPICAL REINFORCING DETAILS SEE DWG. C-230. & C-238.
18. FOR WELDING SPECIFICATIONS SEE SP-453504-90-13
19. FOR GRATING SPECIFICATION SEE SP-453504-20-3
20. DAMP PROOF ALL EXTERIOR SURFACES PER SPECIFICATIONS SP-453504-30-10.
21. ALL CARBON STRUCTURAL STEEL AND EMBEDDED CARBON STEEL ITEMS PER SPECIFICATION SP-453504-20-1

ALLIED CHEMICAL CORPORATION
IDAHO CHEMICAL PROGRAMS - OPERATIONS OFFICE
IDAHO FALLS, IDAHO

THIS DOCUMENT IS RELEASED 4-14-77 AND SUBSEQUENTLY CONTROLLED IN ACCORDANCE WITH ACC STANDARD PRACTICES.

REVISED
APPROVED FOR CONSTRUCTION

NO	DATE	DESCRIPTION	LDR	APPVD	APPVD
6	11-9-82	SEE DCN No 82-249 JWR			

REVISIONS

CPP AREA BLDG. NO. 659

3RD LEVEL FLOOR SLAB
PLAN No 2
CALCINING AREA
NEW WASTE CALCINING FACILTY

FLUOR
ENGINEERS AND CONSTRUCTORS, INC.
LOS ANGELES, CALIFORNIA

U.S. ENERGY R&D ADMINISTRATION
IDAHO OPERATIONS OFFICE
IDAHO FALLS, IDAHO

IN PLANT CODE NC A

	BY	DATE
DRAWN	MARTIN	12-27-76
CHECKED	A. HOLE	2-24-77
APPROVED	F. KEY	2-24-77
APPROVED	[illegible]	2-24-77
APPROVED	[illegible]	2-24-77
APPROVED	[illegible]	2-24-77
ACC APPROVED	[illegible]	4-14-77

SCALE 1/4"=1'-0

DATE 4-14-77

INDEX CODE NUMBER: 2000659 62287 132377

DWG. NO. 1495-CPP-659-C-226 REV 6

FLUOR CONTRACT 453504

PKG #3

132377

MATCH LINE (FOR CONT. SEE DWG C-226)
5-ADD'L #9 DOWELS
ELEC. CONDUIT FOR DET'S SEE 1495-CPP-659-E629
WINDOW ABOVE
170'-6 OUT TO OUT CONCRETE
CORRIDOR EL. 4883'-0
ENTRY
MANIPULATOR PARKING & MAINT.
FILTER CELL EL. 4880'-6
GUTTER DRAIN
EL. 4880'-6
3/4" MAX. SIZE AGGREGATE IN BEAM
HOT SUMP TANK REMOVAL CELL EL. 4879'-0
FOR ENLARGED PLAN HOT SUMP TANK REMOVAL CELL SEE DWG C-234
ALL AROUND (TYP)
T.O. CURB EL. 4882'-0
T.O. CURB EL. 4883'-6
T.O. CURB EL. 4879'-6
OPEN END
6" CURB
3" PIPE SLEEVE
EL. 4882'-3
EL. 4879'-8
H.P. EL. 4879'-0
VALVE OPERATING AREA
L.P. EL. 4878'-10
FLOOR DRAIN
H.P. EL. 4883'-0
6"φ STUB-UPS
LUBE OIL CONSOLE ROOM
L.P. EL. 4882'-10
SLOPE
EMBEDDED ANGLE
GUTTER DRAINS
14"φ S.S. PIPE (SEE SECT. S-2C DWG C-228)
DECON HOLD-UP TANK CELL EL. 4880'-6
DECON COLLECTION TANK & PUMP CELLS EL. 4882'-6
YES-NCD-123
YES-NCD-129
STAIR #2
STAIR #3
FOR ENLARGED PLAN VALVE OPER. AREA SEE DWG C-233
CONSTR. CONTR. SHALL PROVIDE PAD FOR CONDENSATE COLLECTION UNIT PER VENDORS INFO.
SEE U/G PIPING DWG DWG. 1495-CPP-659-377
#8 DOWELS - SPACE AS SHOWN - TYP EA. SIDE OF OPENING (20 TOTAL)
6"φ DRAIN PIPE
WATERSTOP (TYP)
62'-3
32'-3
94'-6 OUT TO OUT CONCRETE
YES-NCC-105 COORD. LINE
FOR COORD. SEE DWG. CE-202
DWG. No C-225 PLAN No 1
DWG. No C-226 PLAN No 2
THIS DWG.
VESSEL & COORD LINE
KEY PLAN
SCALE: NONE
NOTE:
FOR GENERAL NOTES SEE DRAWING C-225.
3RD LEVEL FLOOR SLAB PLAN No 3
NOTE:
ELEVATIONS SHOWN ARE TO TOP OF CONCRETE SLAB AND NOT FINISH FLOOR UNLESS NOTED OTHERWISE
SCALE: 1/4" = 1'-0
4-3/4"φ x 1'-1 SS ANCHOR BOLTS
P-NCD-223
PLAN
TOP OF CONCRETE EL 4883-9 1/2
3-#4 EA. FACE (6-TOTAL)
2-#3 TIES
DETAIL 16-20A
SCALE: 1/2" = 1'-0
REVISED
APPROVED FOR CONSTRUCTION
ALLIED CHEMICAL CORPORATION
IDAHO CHEMICAL PROGRAMS - OPERATIONS OFFICE
IDAHO FALLS, IDAHO
THIS DOCUMENT IS RELEASED 4-14-77
AND SUBSEQUENTLY CONTROLLED IN ACCORDANCE WITH ACC STANDARD PRACTICES.
2 1-6-79 REVISED PER AB 006 & DCR 529
1 6/6/77 REV PER DCN-93-1 & 101-1
REVISIONS
CPP AREA
BLDG. NO. 659
3RD LEVEL FLOOR SLAB PLAN No 3
CALCINING AREA
NEW WASTE CALCINING FACILITY
IN-PLANT CODE NCM
FLUOR
ENGINEERS AND CONSTRUCTORS, INC.
LOS ANGELES, CALIFORNIA
U.S. ENERGY R&D ADMINISTRATION
IDAHO OPERATIONS OFFICE
IDAHO FALLS, IDAHO
INDEX CODE NUMBER
200 0659 62 287 132378
SCALE 1/4" = 1'-0
DATE 4-14-77
DWG NO 1495-CPP-659-C-227
REV 2
PKG #3
FLUOR CONTRACT 453504
132378

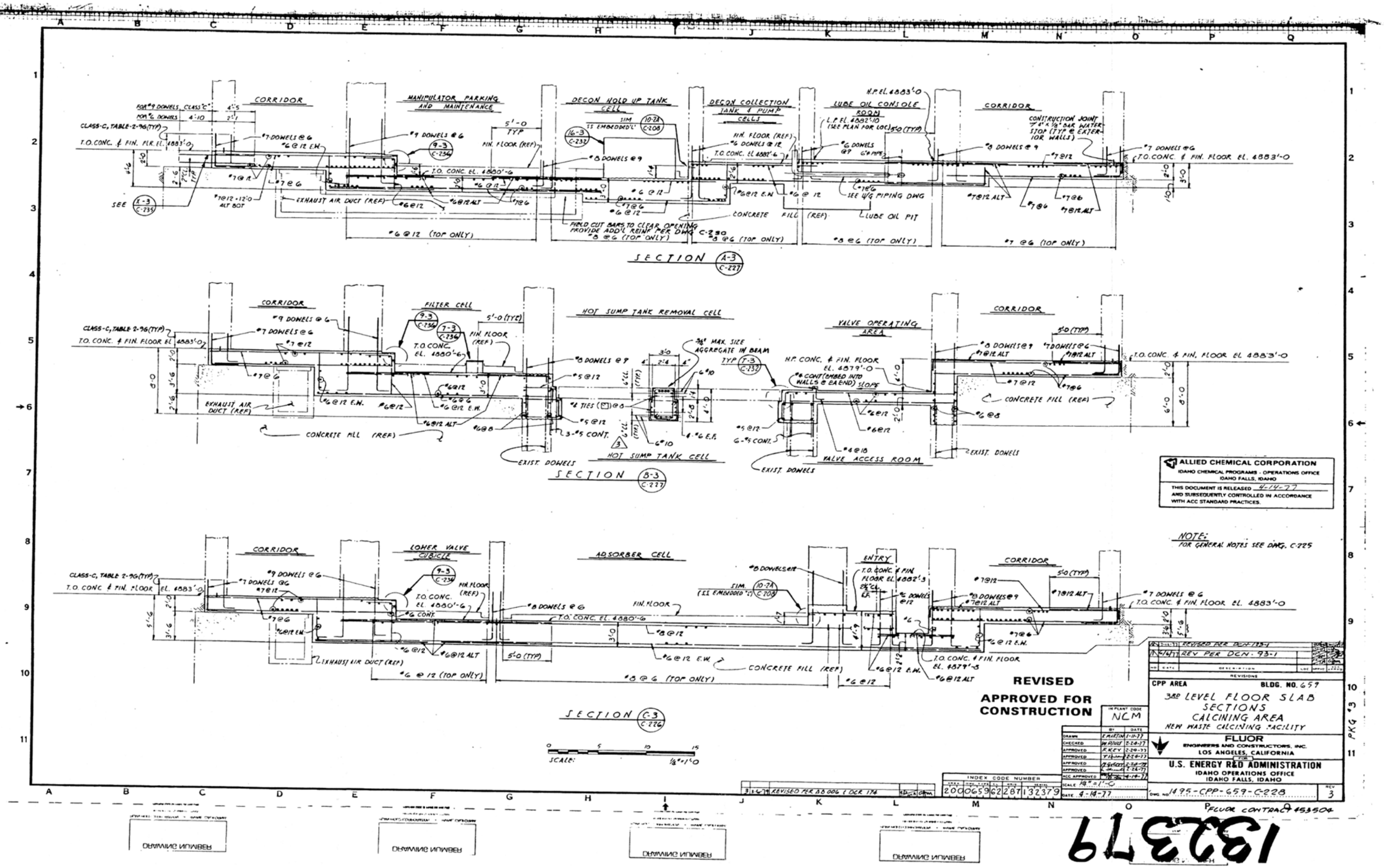
CORRIDOR
MANIPULATOR PARKING AND MAINTENANCE
DECON HOLD UP TANK CELL
DECON COLLECTION TANK & PUMP CELLS
LUBE OIL CONSOLE ROOM
CORRIDOR
SECTION A-3 C-227
CORRIDOR
FILTER CELL
HOT SUMP TANK REMOVAL CELL
VALVE OPERATING AREA
CORRIDOR
HOT SUMP TANK CELL
VALVE ACCESS ROOM
SECTION B-3 C-227
CORRIDOR
LOWER VALVE CUBICLE
ADSORBER CELL
ENTRY
CORRIDOR
SECTION C-3 C-226
SCALE: 1/8"=1'-0
ALLIED CHEMICAL CORPORATION
IDAHO CHEMICAL PROGRAMS - OPERATIONS OFFICE
IDAHO FALLS, IDAHO
THIS DOCUMENT IS RELEASED 4-14-77
AND SUBSEQUENTLY CONTROLLED IN ACCORDANCE WITH ACC STANDARD PRACTICES.
NOTE:
FOR GENERAL NOTES SEE DWG. C-225
REVISED
APPROVED FOR CONSTRUCTION
REVISED PER DCN-193-1
REV PER DCN-93-1
CPP AREA
BLDG. NO. 659
3RD LEVEL FLOOR SLAB
SECTIONS
CALCINING AREA
NEW WASTE CALCINING FACILITY
FLUOR
ENGINEERS AND CONSTRUCTORS, INC.
LOS ANGELES, CALIFORNIA
U.S. ENERGY R&D ADMINISTRATION
IDAHO OPERATIONS OFFICE
IDAHO FALLS, IDAHO
INDEX CODE NUMBER
2000659 62287 132379
DATE 4-14-77
DWG. NO. 1495-CPP-659-C-228
REV 3
FLUOR CONTRACT 453504
PKG #3
132379

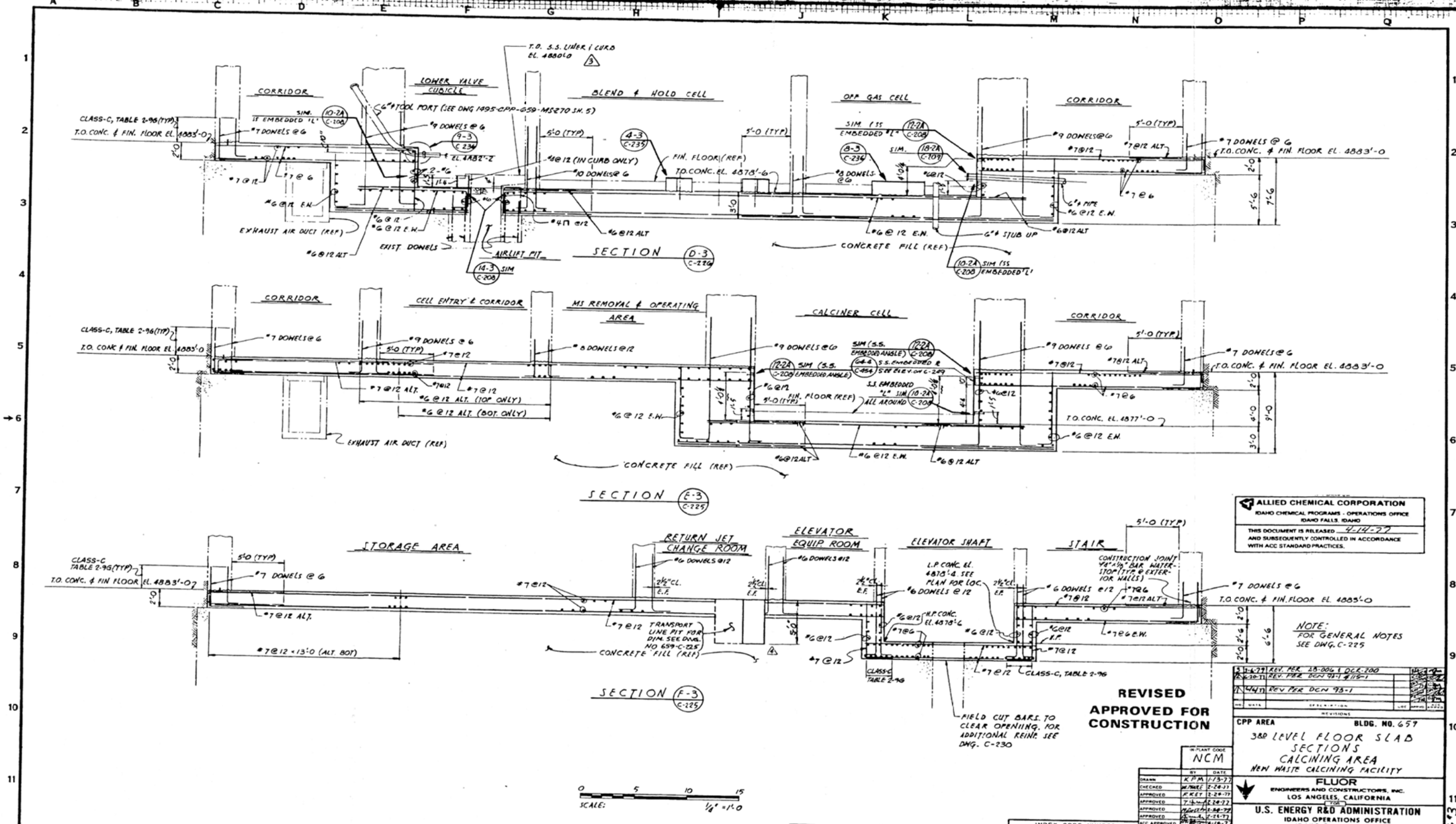
CORRIDOR
LOWER VALVE CUBICLE
BLEND & HOLD CELL
OFF GAS CELL
CORRIDOR
CLASS-C, TABLE 2-96(TYP)
T.O. CONC. & FIN. FLOOR EL. 4883'-0
T.O. S.S. LINER & CURB EL. 4880'-0
6"ϕ TOOL PORT (SEE DWG 1495-CPP-659-MS270 SH. 5)
#9 DOWELS @ 6
#7 DOWELS @ 6
#4@12 (IN CURB ONLY)
#10 DOWELS @ 6
FIN. FLOOR (REF)
T.O. CONC. EL. 4878'-6
#8 DOWELS @ 6
#7 DOWELS @ 6
T.O. CONC. & FIN. FLOOR EL. 4883'-0
EXHAUST AIR DUCT (REF)
EXIST. DOWELS
AIRLIFT PIT
SECTION D-3 C-226
CONCRETE FILL (REF)
6"ϕ STUB UP
6"ϕ PIPE
CORRIDOR
CELL ENTRY & CORRIDOR
MS REMOVAL & OPERATING AREA
CALCINER CELL
CORRIDOR
#7 DOWELS @ 6
#9 DOWELS @ 6
#8 DOWELS @ 12
#9 DOWELS @ 6
#7 DOWELS @ 6
T.O. CONC. & FIN. FLOOR EL. 4883'-0
#7@12 ALT.
#6@12 ALT. (TOP ONLY)
#6@12 ALT. (BOT. ONLY)
EXHAUST AIR DUCT (REF)
FIN. FLOOR (REF)
S.S. EMBEDDED "L" SIM ALL AROUND
T.O. CONC. EL. 4877'-0
CONCRETE FILL (REF)
SECTION E-3 C-225
STORAGE AREA
RETURN JET CHANGE ROOM
ELEVATOR EQUIP. ROOM
ELEVATOR SHAFT
STAIR
#7 DOWELS @ 6
#7@12 ALT.
#7@12 × 13'-0 (ALT. BOT)
TRANSPORT LINE PIT FOR DIM. SEE DWG. NO 659-C-225
CONCRETE FILL (REF)
L.P. CONC. EL. 4878'-4 SEE PLAN FOR LOC.
#6 DOWELS @ 12
H.P. CONC. EL. 4878'-6
CONSTRUCTION JOINT 1/4"×1/8" BAR WATER-STOP (TYP. @ EXTERIOR WALLS)
#7 DOWELS @ 6
T.O. CONC. & FIN. FLOOR EL. 4883'-0
CLASS-C, TABLE 2-96
FIELD CUT BARS TO CLEAR OPENING. FOR ADDITIONAL REINF. SEE DWG. C-230
SECTION F-3 C-225
SCALE: 1/4" = 1'-0
NOTE: FOR GENERAL NOTES SEE DWG. C-225
REVISED
APPROVED FOR CONSTRUCTION
ALLIED CHEMICAL CORPORATION
IDAHO CHEMICAL PROGRAMS - OPERATIONS OFFICE
IDAHO FALLS, IDAHO
THIS DOCUMENT IS RELEASED 4-14-77 AND SUBSEQUENTLY CONTROLLED IN ACCORDANCE WITH ACC STANDARD PRACTICES.
REV. PER AB-006 & DCR-200
REV. PER DCN 93-1
REVISIONS
CPP AREA
BLDG. NO. 659
3RD LEVEL FLOOR SLAB SECTIONS
CALCINING AREA
NEW WASTE CALCINING FACILITY
FLUOR
ENGINEERS AND CONSTRUCTORS, INC.
LOS ANGELES, CALIFORNIA
U.S. ENERGY R&D ADMINISTRATION
IDAHO OPERATIONS OFFICE
IDAHO FALLS, IDAHO
DWG NO 1495-CPP-659-C-229
REV 4
PKG #3
IN-PLANT CODE NCM
DRAWN KPM 1-13-77
CHECKED 2-24-77
APPROVED 2-24-77
APPROVED 2-24-77
APPROVED 2-24-77
APPROVED 2-24-77
ACC APPROVED 4-14-77
SCALE 1/4" = 1'-0
DATE 4-14-77
INDEX CODE NUMBER
200 0659 62 287 132380
REVISED PER ECR-803
DESCRIPTION
FLUOR CONTRACT 453504
132380

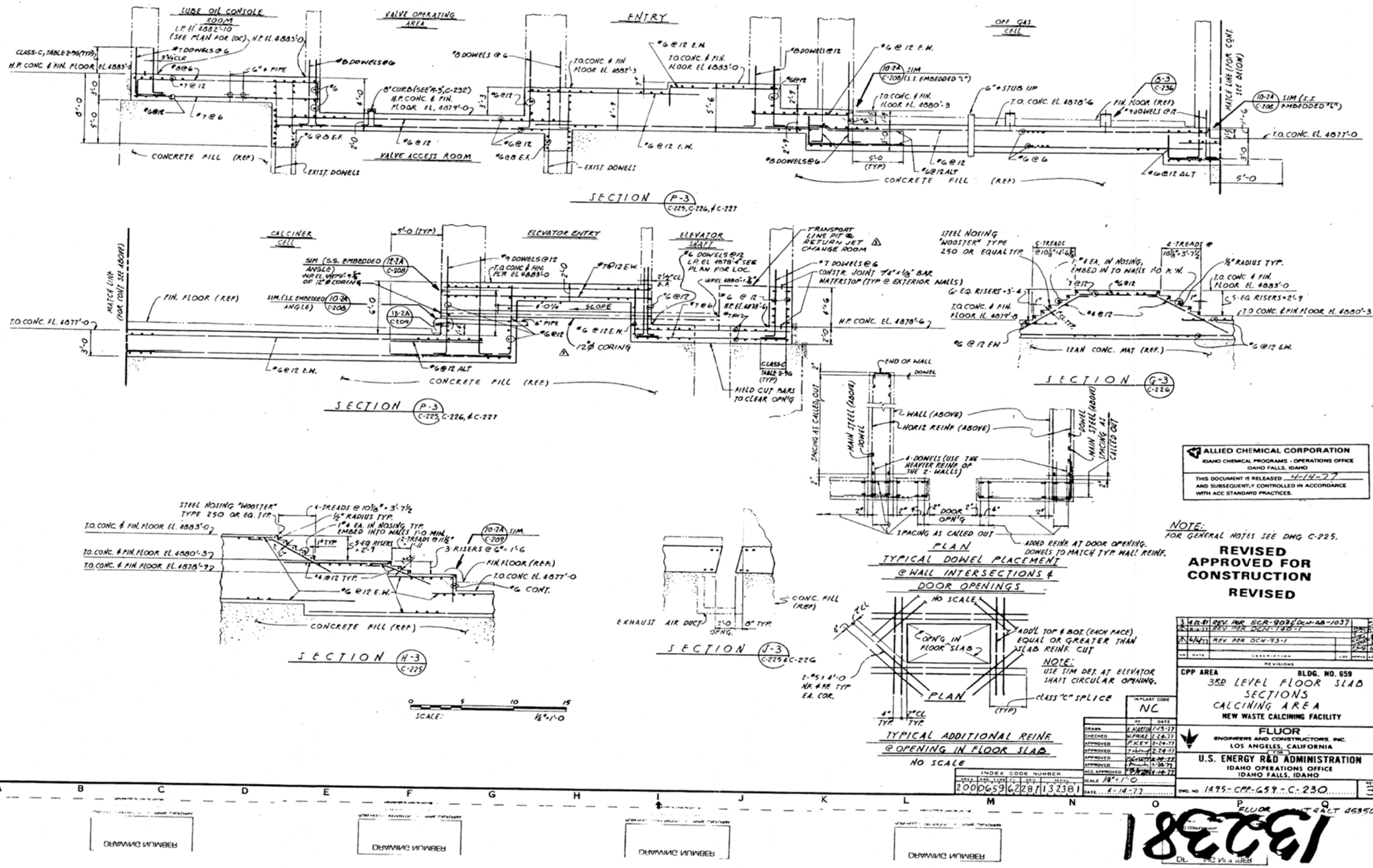
LUBE OIL CONSOLE ROOM
L.P. EL 4882'-10
(SEE PLAN FOR LOC.) H.P. EL 4883'-0
CLASS-C, TABLE 2-9B(TYP.)
H.P. CONC. & FIN. FLOOR EL 4883'-0
3¼" CLR
#7 DOWELS @ 6
#8 @ 6
#7 @ 12
#6 @ 12
#6 @ 6 E.F.
6" ø PIPE
#8 DOWELS @ 6
8" CURB (SEE A-5, C-232)
H.P. CONC. & FIN. FLOOR EL. 4879'-0
CONCRETE FILL (REF.)
EXIST. DOWELS
VALVE ACCESS ROOM
VALVE OPERATING AREA
#8 DOWELS @ 6
T.O. CONC. & FIN. FLOOR EL. 4882'-3
#6 @ 12 E.W.
#6 @ 12
#6 @ 8 E.F.
EXIST. DOWELS
ENTRY
#6 @ 12 E.W.
T.O. CONC. & FIN. FLOOR EL. 4883'-0
#8 DOWELS @ 12
#6 @ 12
#6 @ 12 E.W.
#8 DOWELS @ 6
5'-0 (TYP.)
CONCRETE FILL (REF.)
OFF GAS CELL
10-7A C-206 SIM (S.S. EMBEDDED 4")
T.O. CONC. & FIN. FLOOR EL. 4880'-3
6" STUB UP
T.O. CONC. EL. 4878'-6
#6 @ 12 ALT
#6 @ 6
5-3 C-236
FIN. FLOOR (REF.)
#8 DOWELS @ 12
10-7A C-206 SIM (S.S. EMBEDDED 4")
MATCH LINE (FOR CONT. SEE BELOW)
T.O. CONC. EL. 4877'-0
#6 @ 12 ALT
5'-0
SECTION P-3 C-225, C-226, & C-227
CALCINER CELL
MATCH LINE (FOR CONT. SEE ABOVE)
T.O. CONC. EL. 4877'-0
FIN. FLOOR (REF.)
SIM (S.S. EMBEDDED ANGLE) W/2 EL 4879'-4½ OF 12" Ø CORING
12-2A C-208
SIM (S.S. EMBEDDED ANGLE)
10-3A C-206
15-2A C-209
#6 @ 12 E.W.
#6 @ 12 ALT
CONCRETE FILL (REF.)
5'-0 (TYP.)
ELEVATOR ENTRY
#9 DOWELS @ 12
T.O. CONC. & FIN. FLR. EL 4883'-0
#7 @ 12 E.W.
5'-0" SLOPE
6" PIPE
#6 @ 12 E.W.
12" Ø CORING
ELEVATOR SHAFT
#6 DOWELS @ 12, L.A. EL 4878'-6 SEE PLAN FOR LOC.
W.P. EL 4880'-1½
#6 @ 12
#7 @ 6
#7 @ 12
H.P. EL 4878'-6
CLASS-C TABLE 2-9B (TYP.)
TRANSPORT LINE PIT @ RETURN JET CHANGE ROOM
#7 DOWELS @ 6
CONSTR. JOINT 7'4" x 1/2" BAR WATERSTOP (TYP @ EXTERIOR WALLS)
H.P. CONC. EL. 4878'-6
FIELD CUT BARS TO CLEAR OPN'G
SECTION P-3 C-225, C-226, & C-227
STEEL NOSING "WOOSTER" TYPE 250 OR EQUAL TYP.
6-TREADS @ 10⅜" x 3'-7½"
1" ø EA. IN NOSING, EMBED IN TO WALLS 1'-0 MIN.
½" RADIUS TYP.
T.O. CONC. & FIN. FLOOR EL. 4883'-0
5-EQ. RISERS = 2'-9
T.O. CONC. & FIN. FLOOR EL. 4879'-9
#6 @ 12
#6 @ 12 E.W.
LEAN CONC. MAT (REF.)
SECTION G-3 C-226
END OF WALL
DOWEL
L WALL (ABOVE)
HORIZ REINF (ABOVE)
MAIN STEEL (ABOVE)
SPACING AS CALLED OUT
4-DOWELS (USE THE HEAVIER REINF. OF THE 2 WALLS)
2" DOOR OPN'G
SPACING AS CALLED OUT
ADDED REINF. AT DOOR OPENING. DOWELS TO MATCH TYP. WALL REINF.
PLAN
TYPICAL DOWEL PLACEMENT @ WALL INTERSECTIONS & DOOR OPENINGS
NO SCALE
STEEL NOSING "WOOSTER" TYPE 250 OR EQ. TYP.
6-TREADS @ 10⅜" x 3'-7½"
½" RADIUS TYP.
1" ø EA. IN NOSING, TYP. EMBED INTO WALLS 1'-0 MIN.
5-EQ. RISERS @ 2'-9
3-RISERS @ 6" = 1'-6
FIN. FLOOR (REF.)
T.O. CONC. EL. 4877'-0
#6 @ 12 TYP.
#6 @ 12 E.W.
#6 CONT.
CONCRETE FILL (REF.)
SECTION H-3 C-225
T.O. CONC. & FIN. FLOOR EL. 4883'-0
T.O. CONC. & FIN. FLOOR EL. 4880'-3
T.O. CONC. & FIN. FLOOR EL. 4878'-9
SCALE: ½" = 1'-0
CONC. FILL (REF.)
EXHAUST AIR DUCT
2'-0 OPNG.
6" TYP.
SECTION J-3 C-225 & C-226
OPN'G IN FLOOR SLAB
ADD'L TOP & BOT. (EACH FACE) EQUAL OR GREATER THAN SLAB REINF. CUT
NOTE: USE SIM DET. AT ELEVATOR SHAFT CIRCULAR OPENING.
2-#5 x 4'-0 NR. OF FR. TYP EA. COR.
CLASS "C" SPLICE (TYP.)
4" TYP.
2" CL TYP.
PLAN
TYPICAL ADDITIONAL REINF. @ OPENING IN FLOOR SLAB
NO SCALE
NOTE:
FOR GENERAL NOTES SEE DWG C-225.
REVISED
APPROVED FOR CONSTRUCTION
REVISED
ALLIED CHEMICAL CORPORATION
IDAHO CHEMICAL PROGRAMS - OPERATIONS OFFICE
IDAHO FALLS, IDAHO
THIS DOCUMENT IS RELEASED 4-14-77
AND SUBSEQUENTLY CONTROLLED IN ACCORDANCE WITH ACC STANDARD PRACTICES.
3 4-12-81 REV PER ECR-903 & DCN-AB-1037
2 6-23-77 REV PER DCN-1481
1 4-14-77 REV PER DCN-93-1
NO. DATE DESCRIPTION BY APPD
REVISIONS
CPP AREA BLDG. NO. 659
3RD LEVEL FLOOR SLAB SECTIONS CALCINING AREA
NEW WASTE CALCINING FACILITY
FLUOR ENGINEERS AND CONSTRUCTORS, INC. LOS ANGELES, CALIFORNIA
U.S. ENERGY R&D ADMINISTRATION
IDAHO OPERATIONS OFFICE
IDAHO FALLS, IDAHO
IN-PLANT CODE NC
DRAWN K. MARTIN 1-13-77
CHECKED W.P. GRAE 2-24-77
APPROVED P.K. EY 2-24-77
APPROVED 2-24-77
APPROVED 3-24-77
APPROVED 3-25-77
ACC APPROVED 4-14-77
SCALE 1/8" = 1'-0
DATE 4-14-77
INDEX CODE NUMBER
2000659 6228 113238 1
DWG. NO. 1495-CPP-659-C-230
REV 3
PKG #3
DRAWING NUMBER
DRAWING NUMBER
DRAWING NUMBER
DRAWING NUMBER
FLUOR ENGINEERS AND CONSTRUCTORS, INC. 465504
193238

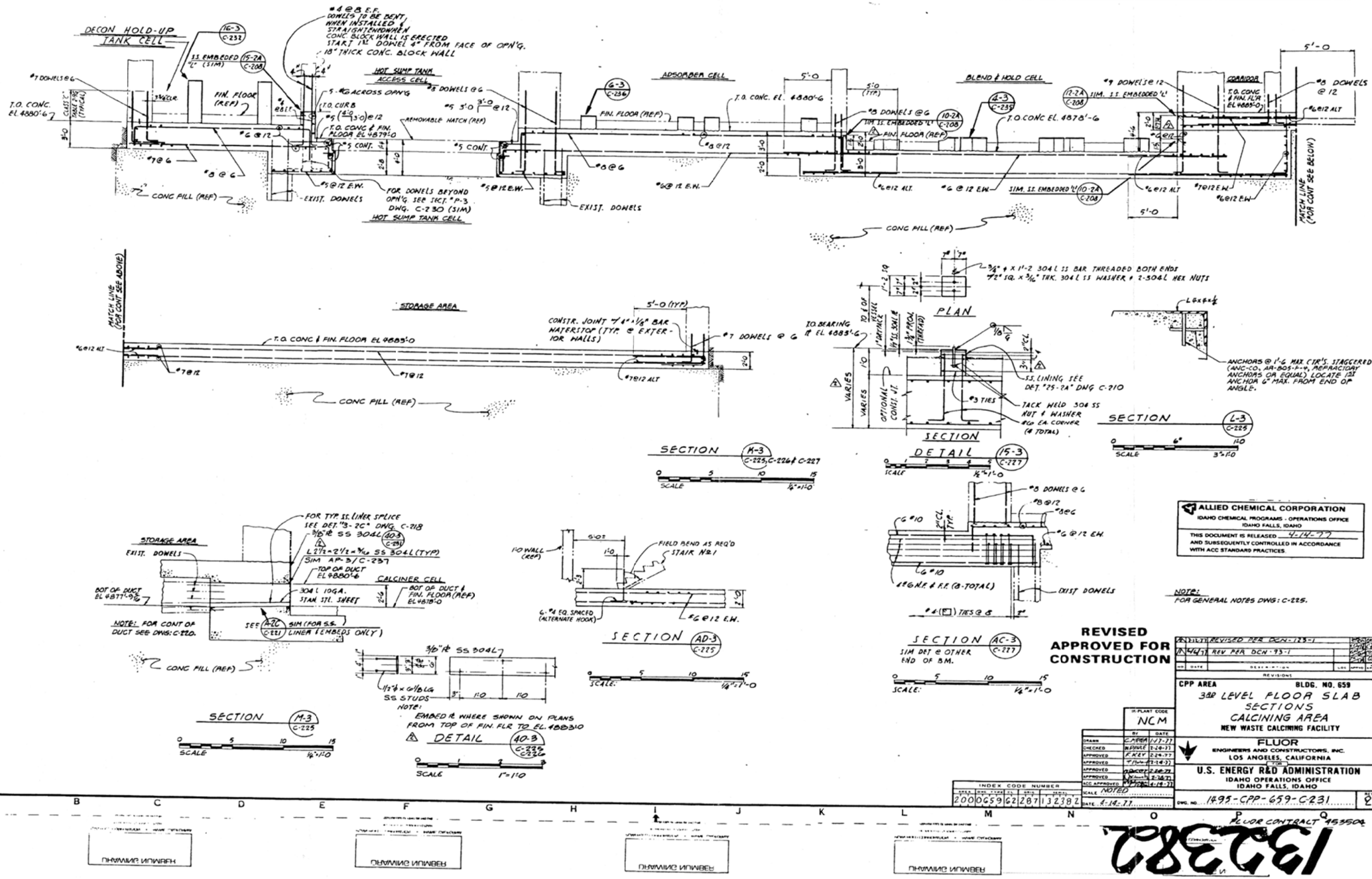

ALLIED CHEMICAL CORPORATION
IDAHO CHEMICAL PROGRAMS - OPERATIONS OFFICE
IDAHO FALLS, IDAHO

THIS DOCUMENT IS RELEASED 4-14-77
AND SUBSEQUENTLY CONTROLLED IN ACCORDANCE WITH ACC STANDARD PRACTICES

NOTE:
FOR GENERAL NOTES DWG: C-225.

REVISED APPROVED FOR CONSTRUCTION

NO.	DATE	REVISIONS	BY	APPD
2	3/11/77	REVISED PER DCN-125-1		
1	4/4/77	REV PER DCN-93-1		

	BY	DATE
DRAWN	C.FREA	1-17-77
CHECKED	W.PAYNE	1-26-77
APPROVED	F.KEY	2-24-77
APPROVED	[illegible]	3-14-77
APPROVED	[illegible]	2-16-77
APPROVED	[illegible]	2-16-77
ACC APPROVED	[illegible]	4-14-77

IR PLANT CODE: NCM
SCALE: NOTED
DATE: 4-14-77

INDEX CODE NUMBER
200 | 0659 | 62 | 287 | 13 | 2382

CPP AREA — BLDG. NO. 659

3RD LEVEL FLOOR SLAB SECTIONS
CALCINING AREA
NEW WASTE CALCINING FACILITY

FLUOR
ENGINEERS AND CONSTRUCTORS, INC.
LOS ANGELES, CALIFORNIA

FOR
U.S. ENERGY R&D ADMINISTRATION
IDAHO OPERATIONS OFFICE
IDAHO FALLS, IDAHO

DWG. NO. 1895-CPP-659-C-231 REV 2

FLUOR CONTRACT 4535

PKG #3

193282

DRAWING NUMBER

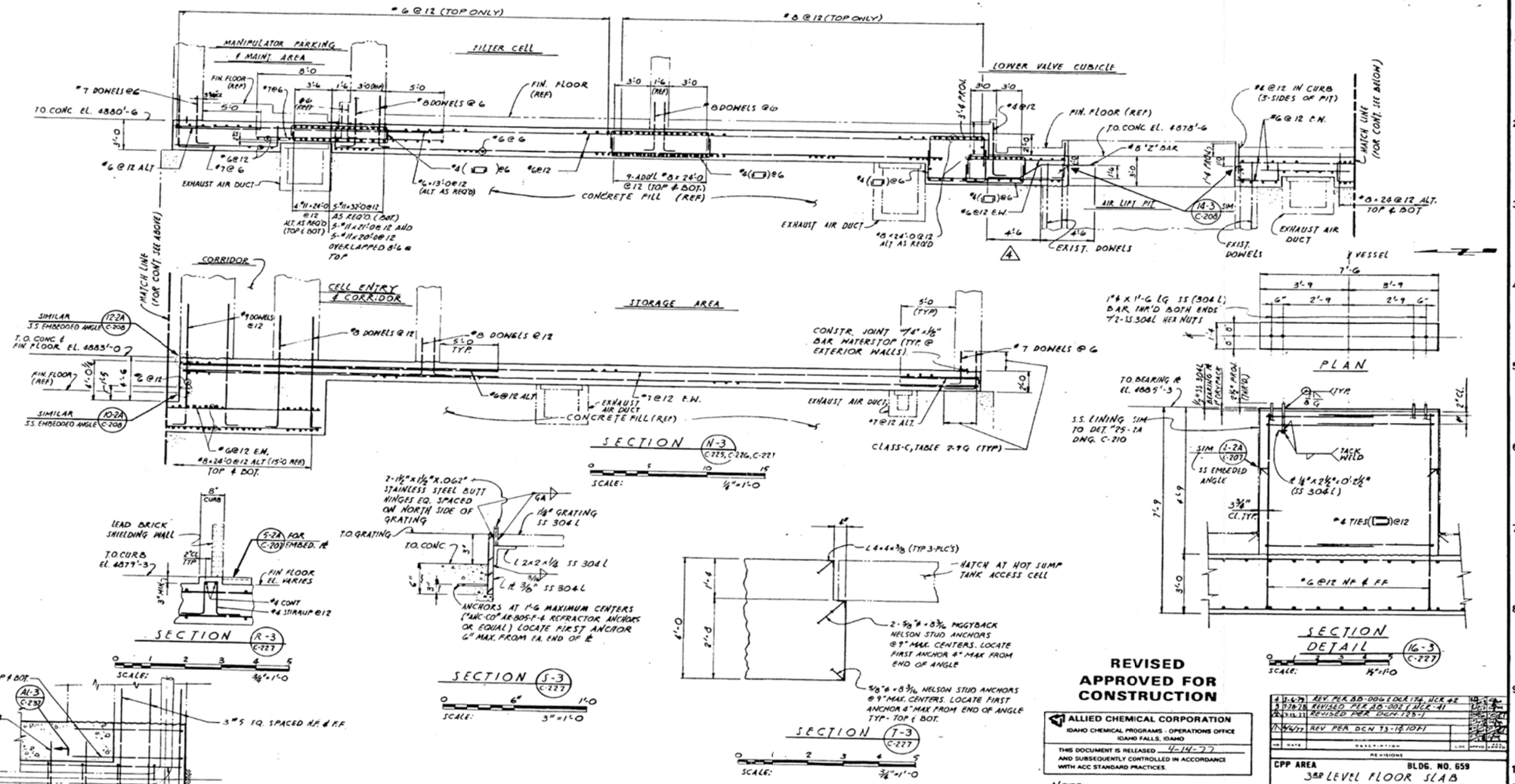
#6 @ 12 (TOP ONLY)
#8 @ 12 (TOP ONLY)
MANIPULATOR PARKING & MAINT. AREA
FILTER CELL
LOWER VALVE CUBICLE
#7 DOWELS @ 6
TO. CONC. EL. 4880'-6
FIN. FLOOR (REF.)
#8 DOWELS @ 6
#6 @ 12 ALT.
EXHAUST AIR DUCT
4"-11'-24'-0 @ 12 ALT. AS REQ'D (TOP & BOT.)
5"-11'-32'-0 @ 12 AS REQ'D. (BOT.)
5"-11'-21'-0 @ 12 ADD'L
5"-11'-20'-0 @ 12 OVERLAPPED 8'-6 @ TOP
#4 @ 13'-0 @ 12 (ALT. AS REQ'D)
9-ADD'L #8 x 24'-0 @ 12 (TOP & BOT.)
CONCRETE FILL (REF.)
#4 @ 12 E.W.
#8 x 24'-0 @ 12 ALT. AS REQ'D
#8 'Z' BAR
#6 @ 12 E.W.
#8 @ 12 IN CURB (3-SIDES OF PIT)
#6 @ 12 E.W.
MATCH LINE (FOR CONT. SEE ABOVE)
#8 x 24 @ 12 ALT. TOP & BOT.
AIR LIFT PIT
EXIST. DOWELS
CORRIDOR
CELL ENTRY & CORRIDOR
STORAGE AREA
SIMILAR 3.5 EMBEDDED ANGLE (12-2A C-208)
T.O. CONC. & FIN. FLOOR EL. 4883'-0
SIMILAR 3.5 EMBEDDED ANGLE (10-2A C-208)
#9 DOWELS @ 12
#8 DOWELS @ 12
5'-0 TYP.
#6 @ 12 ALT.
#7 @ 12 E.W.
EXHAUST AIR DUCT
CONCRETE FILL (REF.)
#6 @ 12 E.W.
#8 x 24'-0 @ 12 ALT (15'-0 REF.) TOP & BOT.
CONSTR. JOINT "A" x 1/8" BAR WATERSTOP (TYP. @ EXTERIOR WALLS)
#7 DOWELS @ 6
EXHAUST AIR DUCT
#7 @ 12 ALT.
CLASS-C, TABLE 2-9 G (TYP.)
SECTION N-3 (C-225, C-226, C-227)
SCALE: 1/4"=1'-0
2-1 1/2" x 1 1/2" x .062" STAINLESS STEEL BUTT HINGES EQ. SPACED ON NORTH SIDE OF GRATING
T.O. GRATING
T.O. CONC.
6A
1/8" GRATING SS 304 L
L 2x2x1/4 SS 304 L
L ft 3/8" SS 304 L
ANCHORS AT 1'-6 MAXIMUM CENTERS ("HILTI-CO" HB-BOS-F-6 REFRACTOR ANCHORS OR EQUAL) LOCATE FIRST ANCHOR 6" MAX. FROM EA. END OF L
SECTION S-3 (C-227)
SCALE: 3"=1'-0
L 4x4x3/8 (TYP. 3 PLC'S)
HATCH AT HOT SUMP TANK ACCESS CELL
2-5/8"ø x 8 3/16 PIGGYBACK NELSON STUD ANCHORS @ 9" MAX. CENTERS. LOCATE FIRST ANCHOR 4" MAX FROM END OF ANGLE
5/8"ø x 8 3/16 NELSON STUD ANCHORS @ 9" MAX. CENTERS. LOCATE FIRST ANCHOR 4" MAX FROM END OF ANGLE TYP. TOP & BOT.
SECTION T-3 (C-227)
SCALE: 3/4"=1'-0
8" CURB
LEAD BRICK SHIELDING WALL
T.O. CURB EL. 4879'-3
5-2A FOR C-209 EMBED. ℄
FIN. FLOOR EL. VARIES
#4 CONT
#4 STIRRUP @ 12
SECTION R-3 (C-227)
SCALE: 3/4"=1'-0
#5 (U) TOP & BOT.
AL-3 C-232
#4 (U) @ 18
3"ø SQ. SPACED H.F. & F.F.
6" ø PIPE
#3 TIES @ 18
6-#6 (1-EA. COR.)
SECTION BC-3 (C-232)
SCALE: 1/2"=1'-0
1" ø x 1'-6 LG. SS (304 L) BAR, THR'D BOTH ENDS W/ 2-SS 304 L HEX NUTS
PLAN
TO. BEARING PL EL. 4885'-3
SS LINING SIM. TO DET. "2S-2A DWG. C-210
SIM 1-2A (C-207) SS EMBEDED ANGLE
TACK WELD
1/4" x 2 1/2" x 0'-2 1/2" (SS 304 L)
3 3/4" CL. TYP.
#4 TIES @ 12
#6 @ 12 N.F. & F.F.
SECTION DETAIL 16-3 (C-227)
SCALE: 1/2"=1'-0
REVISED APPROVED FOR CONSTRUCTION
ALLIED CHEMICAL CORPORATION
IDAHO CHEMICAL PROGRAMS - OPERATIONS OFFICE
IDAHO FALLS, IDAHO
THIS DOCUMENT IS RELEASED 4-14-77
AND SUBSEQUENTLY CONTROLLED IN ACCORDANCE WITH ACC STANDARD PRACTICES.
NOTE: FOR GENERAL NOTES SEE DWG. C-225
REVISIONS
1 3-6-79 REV. PER AD-006 (ECR 174, ECR 42)
2 9-28-78 REVISED PER AD-002 (ECR-41)
3 11-11 REVISED PER DCN-125-1
11-14-77 REV. PER DCN 73-16 (OFF)
CPP AREA BLDG. NO. 659
3RD LEVEL FLOOR SLAB SECTIONS CALCINING AREA
NEW WASTE CALCINING FACILITY
FLUOR ENGINEERS AND CONSTRUCTORS, INC. LOS ANGELES, CALIFORNIA
U.S. ENERGY R&D ADMINISTRATION IDAHO OPERATIONS OFFICE IDAHO FALLS, IDAHO
IN PLANT CODE NC
DRAWN K. BURTON 1-18-77
CHECKED M. PAULY 2-24-77
APPROVED F. KEY 2-24-77
APPROVED T. HUMPHREYS 2-24-77
APPROVED [illegible] 3-24-77
APPROVED [illegible] 3-24-77
ACC APPROVED [illegible] 4-14-77
SCALE NOTED
DATE 4-14-77
INDEX CODE NUMBER 200 0659 62287 32383
DWG. NO. 1895-CPP-659-C-232
REV. 4
PKG #3
FLUOR CONTRACT 253504
DRAWING UNAWARD
DRAWING UNAWARD
DRAWING UNAWARD
DRAWING UNAWARD
ESCEI

REVISED APPROVED FOR CONSTRUCTION

NOTE:
FOR GENERAL NOTES SEE DWG. C-225.

ALLIED CHEMICAL CORPORATION
IDAHO CHEMICAL PROGRAMS - OPERATIONS OFFICE
IDAHO FALLS, IDAHO

THIS DOCUMENT IS RELEASED 4-14-77 AND SUBSEQUENTLY CONTROLLED IN ACCORDANCE WITH ACC STANDARD PRACTICES.

NO.	DATE	REVISIONS	BY	CHK'D	APP'D
A	3-28-77	REVISED PER DCN-363-1			
B	4-14-77	REV PER DCN 93-1			

IN-PLANT CODE: NCA

	BY	DATE
DRAWN	(illegible)	3-28-77
CHECKED	(illegible)	3-28-77
APPROVED	(illegible)	3-28-77
APPROVED	(illegible)	3-28-77
APPROVED	(illegible)	3-28-77
ACC APPROVED	(illegible)	4-14-77

INDEX CODE NUMBER: 200 065 9 62 287 132390

SCALE: NOTED
DATE: 4-19-77

CPP AREA — BLDG. NO. 659

3RD LEVEL FLOOR SLAB SECTIONS & DETAILS CALCINING AREA
NEW WASTE CALCINING FACILITY

FLUOR ENGINEERS AND CONSTRUCTORS, INC. LOS ANGELES, CALIFORNIA

U.S. ENERGY R&D ADMINISTRATION
IDAHO OPERATIONS OFFICE
IDAHO FALLS, IDAHO

DWG. NO. 1495-CPP-659-C-239 REV. 2.

FLUOR CNTR. # 4553-504

PAGE 13

DRAWING NUMBER

DRAWING NUMBER

DRAWING NUMBER

DRAWING NUMBER

19390

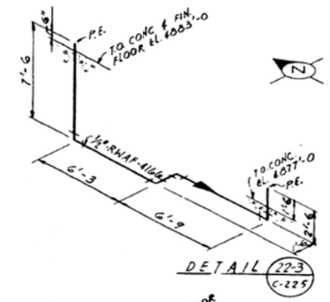

DETAIL 22-3 C-225

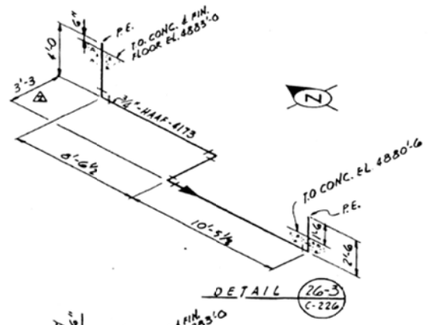

DETAIL 26-3 C-226

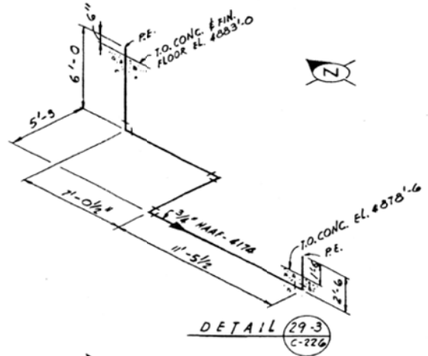

DETAIL 29-3 C-226

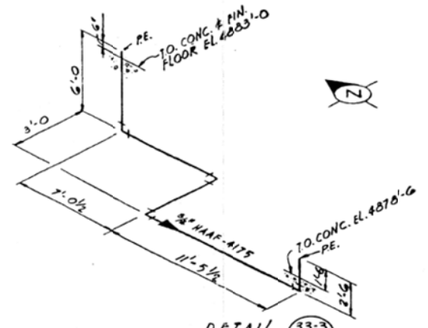

DETAIL 33-3 C-226

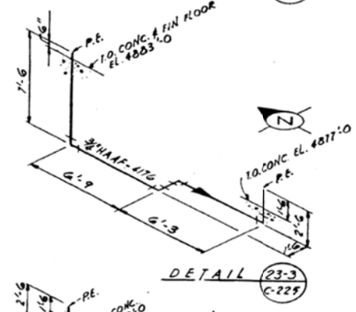

DETAIL 23-3 C-225

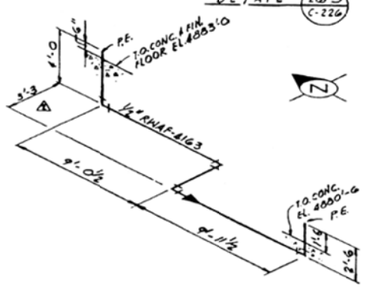

DETAIL 27-3 C-226

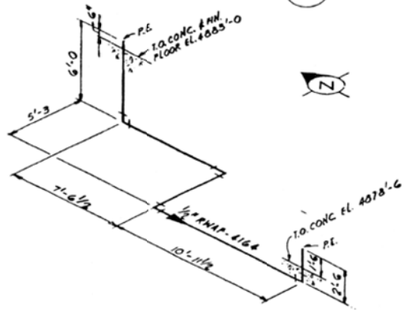

DETAIL 30-3 C-226

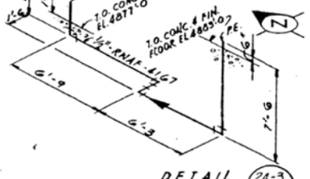

DETAIL 24-3 C-225

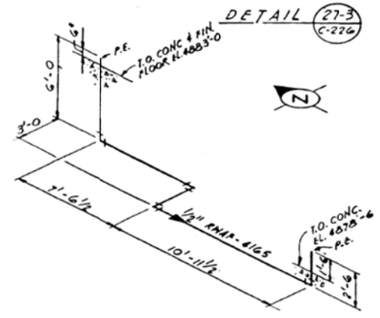

DETAIL 28-3 C-226

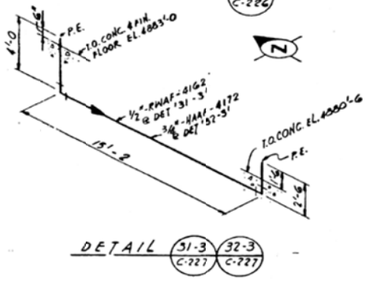

DETAIL 31-3 C-227 32-3 C-227

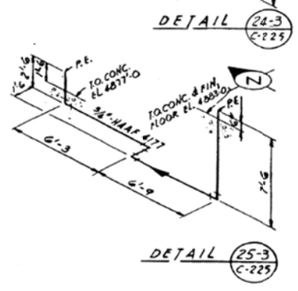

DETAIL 25-3 C-225

NOTE

1. FOR FABRICATION AND TESTING SEE GENERAL SPECIFICATION FOR PIPING SP-453504-50-2
2. TEST PRESSURE FOR LINES SHOWN ON THIS DRAWING SHALL BE:
   225 PSIG FOR WATER LINES (RNAF)
   187 PSIG FOR AIR LINES (HAAF)

REVISED APPROVED FOR CONSTRUCTION

ALLIED CHEMICAL CORPORATION
IDAHO CHEMICAL PROGRAMS - OPERATIONS OFFICE
IDAHO FALLS, IDAHO
THIS DOCUMENT IS RELEASED 4-15-77
AND SUBSEQUENTLY CONTROLLED IN ACCORDANCE WITH ACC STANDARD PRACTICES.

NO.	DATE	DESCRIPTION	ENG. APPROVAL
2	3-29-77	REV PER DCN 115-1	
1	3-4-77	REV PER DCN 95-1	

REVISIONS

CPP AREA — BLDG. NO. 659

3RD LEVEL FLOOR SLAB PIPING ISOMETRICS CALCINING AREA

NEW WASTE CALCINING FACILITY

	BY	DATE
DRAWN	E.KELTON	4-12-77
CHECKED	J. MACHAN	4-13-77
APPROVED	R.KEY	4-13-77
APPROVED	T.BRAUN	4-15-77
APPROVED	C.SCHULTZ	4-15-77
APPROVED	R.K. [illegible]	4-15-77
ACC APPROVED	R.W. [illegible]	4-19-77

SCALE: NONE
DATE: APR. 15, 1977

IR PLANT CODE: NCA

INDEX CODE NUMBER: 200 06 59 62 287 132391

FLUOR ENGINEERS AND CONSTRUCTORS, INC.
LOS ANGELES, CALIFORNIA
FOR
U.S. ENERGY R&D ADMINISTRATION
IDAHO OPERATIONS OFFICE
IDAHO FALLS, IDAHO

DWG. NO. 1495-CPP-659-C-240 REV. 2

3-29-77

FLUOR CONTRACT NO 453506

PKG #3

DRAWING NUMBER

DRAWING NUMBER

DRAWING NUMBER

DRAWING NUMBER

16261

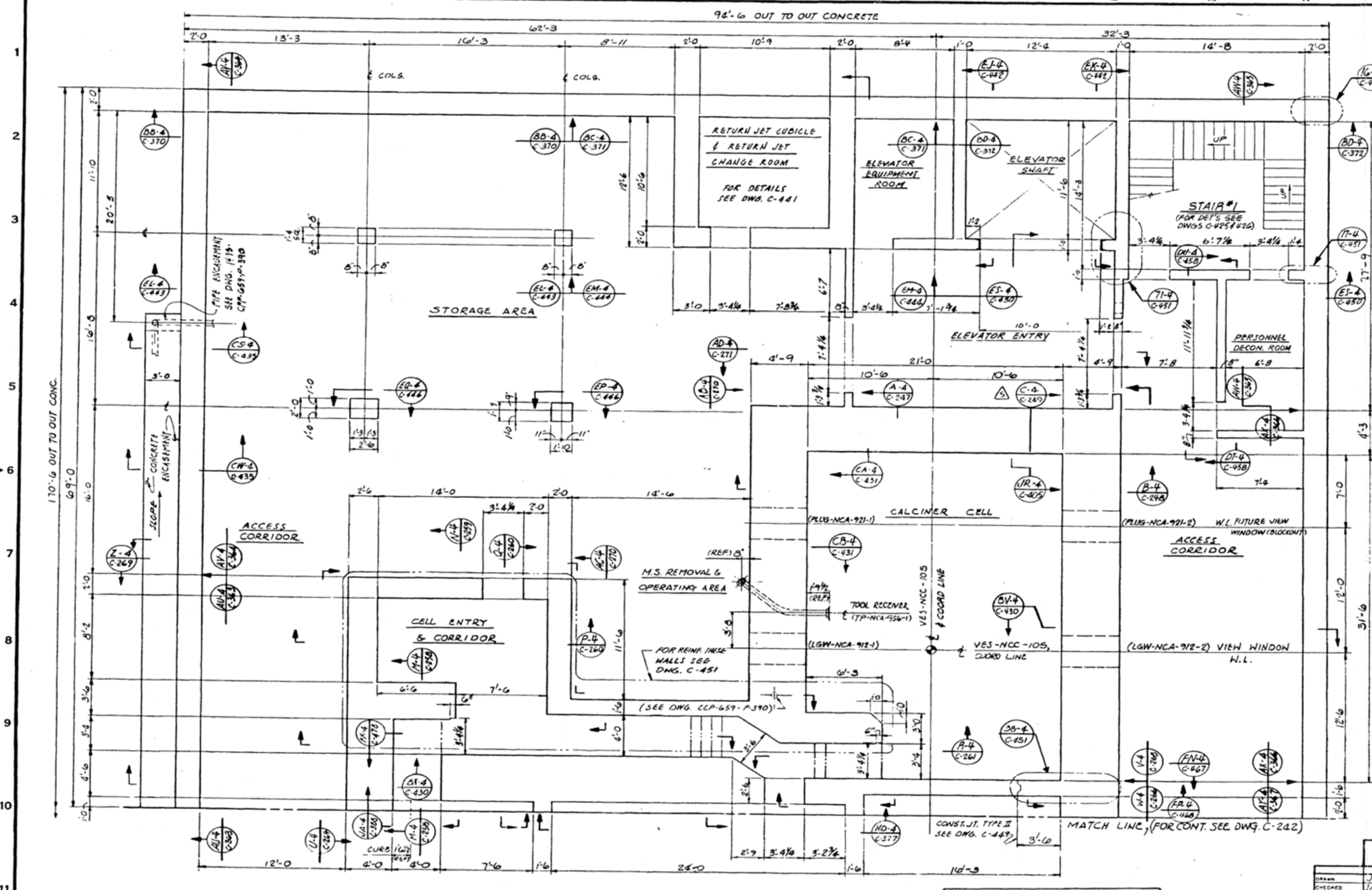

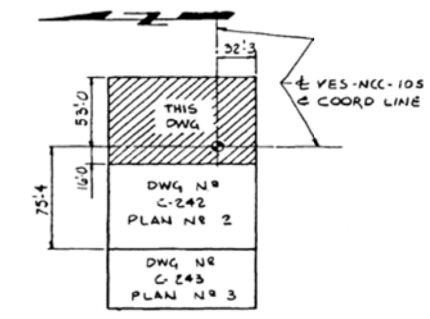

KEY PLAN
SCALE: NONE

GENERAL NOTES:

1. FOR CONCRETE SPECIFICATIONS SEE SP-453504-10-1.
2. EMBEDDED ITEMS SHALL BE IN ACCORDANCE WITH THE FOLLOWING SPECIFICATIONS:
   a. PIPE-SPECIFICATION SP-453504-50-3 LINE CLASS "AD", EXCEPT WHERE NOTED.
   b. CONDUIT-SPECIFICATION SP-453504-60-10.
   c. STUDS, PLATES, & ANGLES FOR LINER-SPECIFICATION SP-453504-20-1 & 2.
   d. ANCHOR BOLTS, PIPE SUPPORTS, & OTHER STRUCT STL MEMBERS-SPEC SP-453504-20-1 & 3
3. FOR ORIGINAL SS LINER DETAILS SEE STANDARD DETAILS DWGS C-207 THRU C-210. FOR ROOM 313 SS LINER SEE DWGS 093771 THRU 093778.
4. ALL EMBEDDED ELECTRICAL CONDUIT & GROUNDING TO BE IN PLACE BEFORE POURING CONCRETE. SEE ELECT. DWG'S. 1495-CPP-659-E-212 SHT'S. 1 THRU 7.
5. ALL CARBON STEEL (ASTM-A36) EMBEDDED PLATES SHALL BE PAINTED IN ACCORDANCE WITH SPECIFICATION SP-453504-80-2, AFTER FIELD WELDING OF SUPPORT BEAM CONNECTION IS COMPLETED.
6. ALL INTERIOR CONCRETE SURFACES OF PROCESS AREAS ABOVE STAINLESS STEEL LINER; FLOORS AND LOWER 3'-2 OF WALLS IN CORRIDORS SHALL HAVE A DECONTAMINABLE COATING IN ACCORDANCE WITH SPEC. 453504-30-1. OTHER AREAS TO BE PAINTED OR COATED ACCORDING TO ARCHITECTURAL FINISH SCHEDULE & SPECIFICATIONS.
7. FORM RELEASE AGENTS SHALL BE COMPATIBLE WITH PROTECTIVE COATING THAT WILL BE SUBSEQUENTLY USED. PER ANSI N 5.9-1967 REVISED & REDESIGNATED AS N 5.12-1974.
8. WATERSTOPS ARE REQD. AT ALL CONST. JOINTS IN EXTERIOR WALLS. AIRSEALS REQD. AT ALL CONST. JOINTS IN SHIELDING WALLS. MATERIAL SHALL BE A CONTINUOUS CARBON STEEL BAR 4 × 1/8 WITH BUTT WELDED ENDS & CORNERS PER SPEC. SP-453504-90-13.
9. FINISH FLOOR TO BE STEEL TROWEL FINISHED WITH CLASS "A" TOLERANCE. PER SPEC. SP-453504-10-1
10. WHERE LAP SPLICE LENGTHS ARE NOT SHOWN USE CLASS "C" TABLE 2-9G & 2-9H ACI-315 LATEST EDITION (f'c 4000)
11. MISCELLANEOUS STEEL ITEMS TO BE A36 (CARBON STEEL) UNLESS OTHERWISE NOTED
12. FOR TYPICAL CONCRETE REINFORCING DETAILS SEE DWG. C-238 & C-449 FOR CONST JOINTS.
13. ALL STRUCTURAL SHAPES (ANGLES, ANCHORS, STUDS, ℄'S, ETC) SHALL BE A36 STEEL, UNLESS NOTED OTHERWISE.

(FOR CONTINUATION OF NOTES SEE DWG C-242)

3RD LEVEL FLOOR WALL PLAN Nº 1

SCALE: 1/4" = 1'-0

NO	DATE	DESCRIPTION
6	2-26-90	SEE DCN 120130-AB12
5	3-22-79	REVISED PER DCN 758-1
4	5-10-79	REVISED PER AB 004 / DCR 337
3	9-28-78	REVISED PER AB-003 / DCR-405
2	7-28-77	REVISED PER DCN 178-1
1	6-11-77	REVISED PER DCN 140-1

REVISIONS

ALLIED CHEMICAL CORPORATION
IDAHO CHEMICAL PROGRAMS - OPERATIONS OFFICE
IDAHO FALLS, IDAHO

THIS DOCUMENT IS RELEASED 7-1-77 AND SUBSEQUENTLY CONTROLLED IN ACCORDANCE WITH ACC STANDARD PRACTICES.

INDEX CODE NUMBER: 200 0659 62 2871 13239 2

IN PLANT CODE: NCA

	BY	DATE
DRAWN	J CHAI	6-29-77
CHECKED	J CHAI	6-29-77
APPROVED	[illegible]	6-29-77
APPROVED	[illegible]	6-29-77
APPROVED	[illegible]	5-?-77
APPROVED	[illegible]	6-?-77
ACC APPROVED	[illegible]	6-30-77

SCALE 1/4" = 1'-0
DATE 6-30-77

CPP AREA BLDG. NO. 659

3RD LEVEL FLOOR
WALL PLAN Nº 1
CALCINING AREA
NEW WASTE CALCINING FACILITY

FLUOR
ENGINEERS AND CONSTRUCTORS, INC.
LOS ANGELES, CALIFORNIA
FOR
U.S. ENERGY R&D ADMINISTRATION
IDAHO OPERATIONS OFFICE
IDAHO FALLS, IDAHO

DWG. NO. 1495-CPP-659-C-241 REV. 6

PKG. #1A,B,C

FLUOR CONTRACT 452504

132392

DRAWING NUMBER

DRAWING NUMBER

DRAWING NUMBER

DRAWING NUMBER

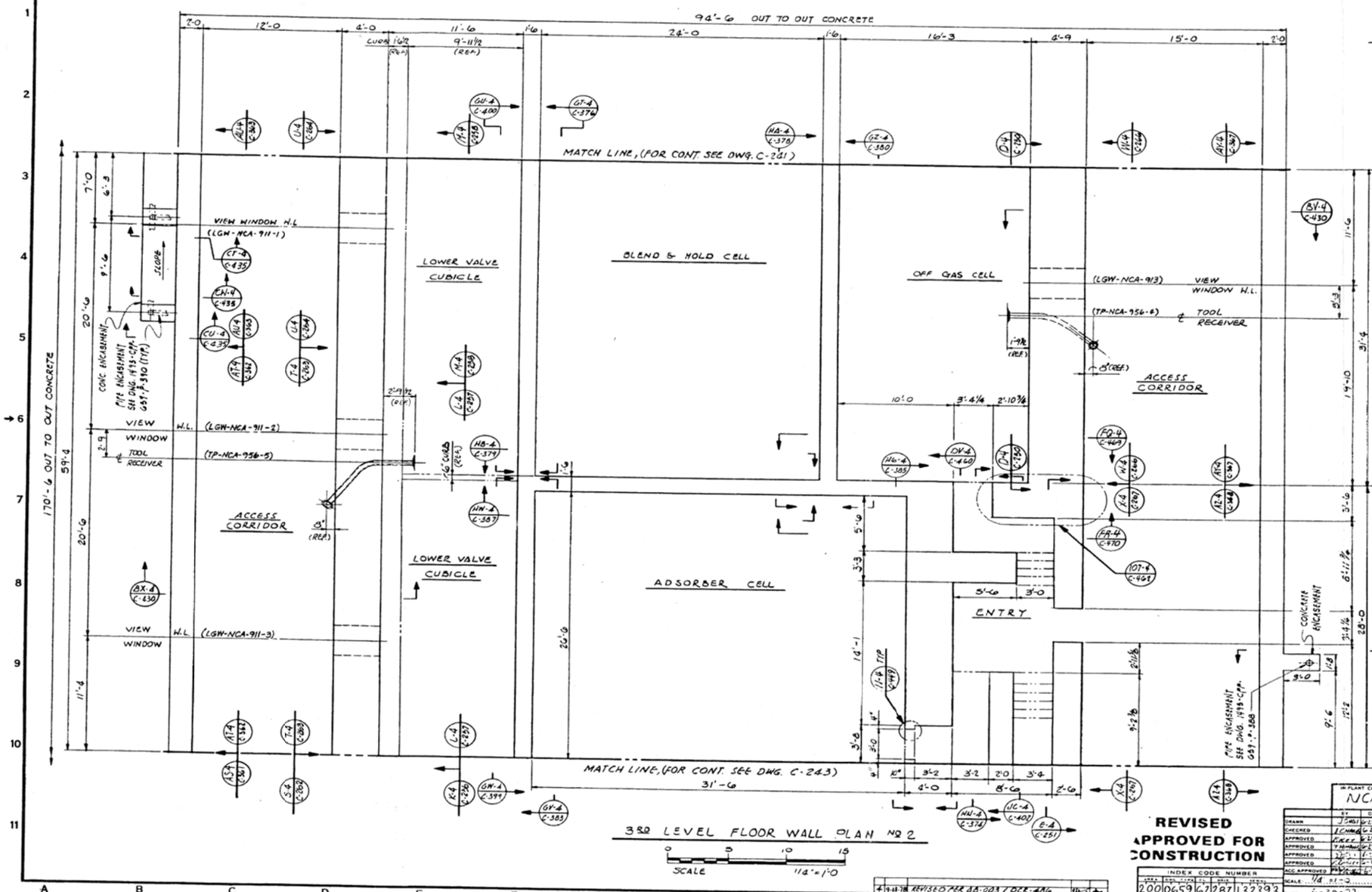

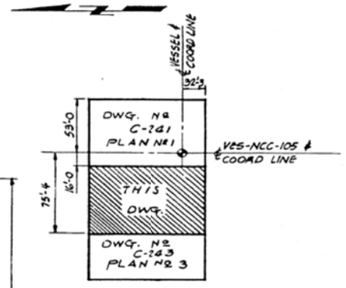

KEY PLAN
SCALE: NONE

NOTES CONTINUED FROM DWG C-241.

14. FOR REINFORCING AT DOOR OPENINGS SEE DWG C-462.
15. FOR PENETRATION DET'S THRU S.S. LINER ℄ SEE "TYP DET @ PIPE, CONDUIT OR SLEEVE", DWG 1495-CPP-659-C-453.
16. FOR BASIC PIPING WALL & FLOOR PENETRATION DET'S SEE DWG 1495-CPP-659-P-505, SHEET 1 & 2.
17. FOR SPECIAL PIPING PENETRATIONS FOR WALL & FLOORS SEE DET'S ON DWGS 1495-CPP-659-P-507, SHEET 1 THRU 5.
18. FOR BASIC PIPING WALL & FLOOR PENETRATION INDEX SEE DWG 1495-CPP-659-P-506, SHEET 1 THRU 11.
19. MAXIMUM AGGREGATE SIZE FOR CONC. WALLS SHALL NOT EXCEED 3/4 INCH PER ASTM C-33 SEE SP-453504-10-1.
20. ALL EXTERIOR WALLS WILL REQUIRE DAMPPROOFING FROM GRADE TO TOP OF LEAN CONCRETE AS PER SPEC SP-453509-30 10 NOT REQUIRED FOR FOOTING WALLS OR CONCRETE ENCASEMENTS AROUND PIPING.
21. ALL WELDING SHALL BE IN ACCORDANCE WITH SPEC. SP 453504-90-13
22. FOR LEGEND SEE DWG. C-243.
23. FOR HIGH DENSITY CONCRETE SEE SPEC. SP-453504-10-2.

ALLIED CHEMICAL CORPORATION
IDAHO CHEMICAL PROGRAMS - OPERATIONS OFFICE
IDAHO FALLS, IDAHO

THIS DOCUMENT IS RELEASED 7-1-77 AND SUBSEQUENTLY CONTROLLED IN ACCORDANCE WITH ACC STANDARD PRACTICES.

NO	DATE	DESCRIPTION	LOC	APPVD
4	6-13-78	REVISED PER DCN 433-1		
3	1-17-78	REVISED PER DCN 339-1		
2	8-11-77	REVISED PER DCN 140-1		

REVISIONS

CPP AREA — BLDG. NO. 659

3RD LEVEL FLOOR WALL PLAN NO 2
CALCINING AREA
NEW WASTE CALCINING FACILITY

FLUOR
ENGINEERS AND CONSTRUCTORS, INC.
LOS ANGELES, CALIFORNIA

U.S. ENERGY R&D ADMINISTRATION
IDAHO OPERATIONS OFFICE
IDAHO FALLS, IDAHO

DWG. NO. 1495-CPP-659-C-242 — REV 4

REVISED APPROVED FOR CONSTRUCTION

IN-PLANT CODE NCA

INDEX CODE NUMBER: 200 0659 62 287 132393

SCALE 1/4" = 1'-0
DATE 6-30-77

4 9-23-78 REVISED PER AB-003 / DCR-486

FLUOR CONTRACT #53504

PKG. #4A,B,C

132393

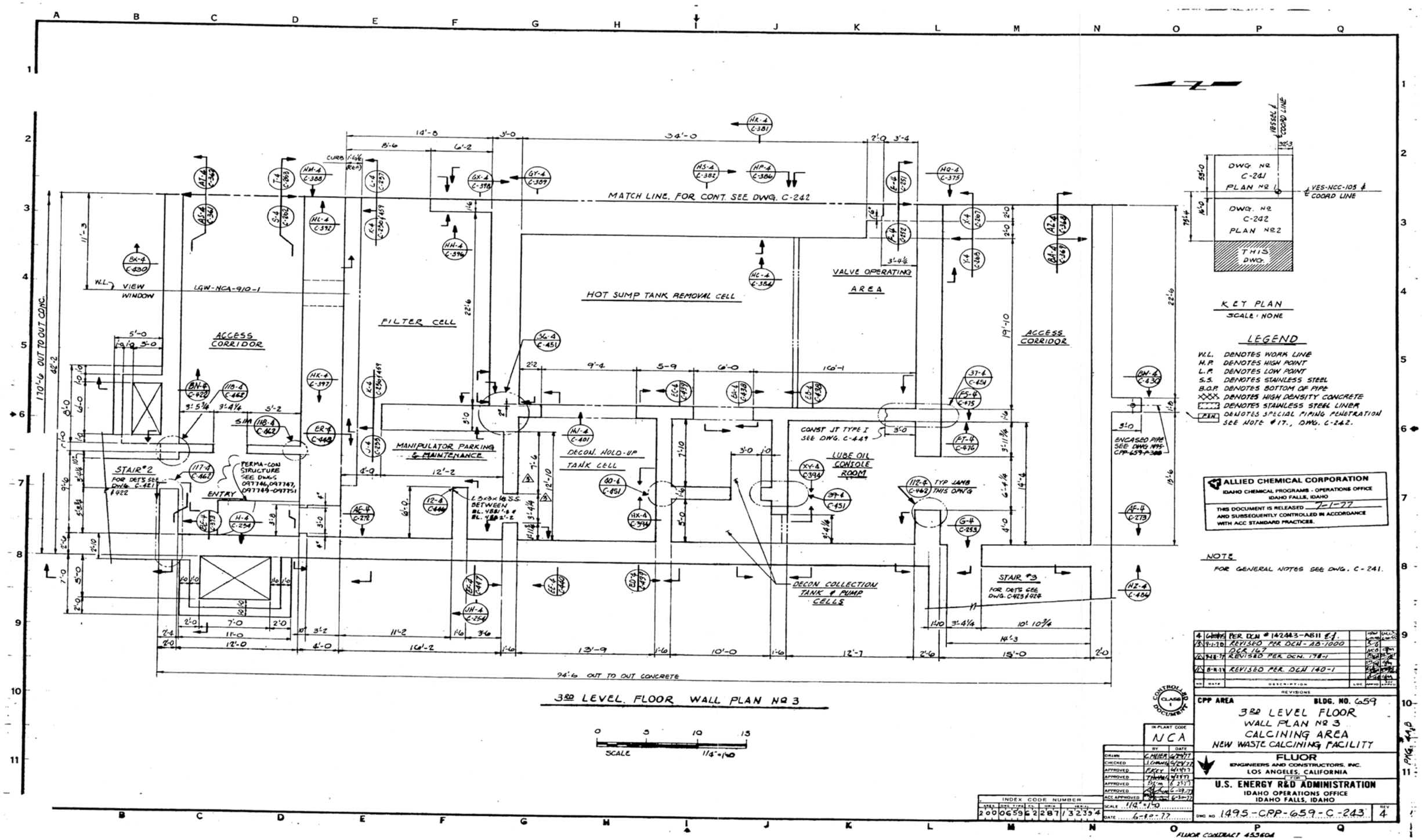

MATCH LINE, FOR CONT. SEE DWG. C-242
HOT SUMP TANK REMOVAL CELL
VALVE OPERATING AREA
FILTER CELL
ACCESS CORRIDOR
MANIPULATOR PARKING & MAINTENANCE
DECON. HOLD-UP TANK CELL
LUBE OIL CONSOLE ROOM
CONST JT TYPE I SEE DWG. C-449
DECON COLLECTION TANK & PUMP CELLS
STAIR #2
STAIR #3
ENTRY
PERMA-CON STRUCTURE SEE DWGS 097746, 097747, 097749-097751
ENCASED PIPE SEE DWG 1495-CPP-659-P-388
TYP LAMB THIS DWG
VIEW WINDOW
LGW-NCA-910-1
170'-6 OUT TO OUT CONC.
94'-6 OUT TO OUT CONCRETE
3RD LEVEL FLOOR WALL PLAN NO 3
SCALE 1/4"=1'-0
DWG. NO C-241 PLAN NO 1
DWG. NO C-242 PLAN NO 2
THIS DWG.
VES-NCC-105 & COORD LINE
KEY PLAN
SCALE: NONE
LEGEND
W.L. DENOTES WORK LINE
H.P. DENOTES HIGH POINT
L.P. DENOTES LOW POINT
S.S. DENOTES STAINLESS STEEL
B.O.P. DENOTES BOTTOM OF PIPE
DENOTES HIGH DENSITY CONCRETE
DENOTES STAINLESS STEEL LINER
DENOTES SPECIAL PIPING PENETRATION SEE NOTE #17., DWG. C-242.
ALLIED CHEMICAL CORPORATION
IDAHO CHEMICAL PROGRAMS - OPERATIONS OFFICE
IDAHO FALLS, IDAHO
THIS DOCUMENT IS RELEASED 7-1-77
AND SUBSEQUENTLY CONTROLLED IN ACCORDANCE WITH ACC STANDARD PRACTICES.
NOTE
FOR GENERAL NOTES SEE DWG. C-241.
4 PER DCN # 142443-AB11
REVISED PER DCN-AB-1000
REVISED PER DCN. 178-1
REVISED PER DCN 140-1
REVISIONS
CONTROLLED DOCUMENT CLASS I
CPP AREA
BLDG. NO. 659
3RD LEVEL FLOOR
WALL PLAN NO 3
CALCINING AREA
NEW WASTE CALCINING FACILITY
IN-PLANT CODE NCA
FLUOR
ENGINEERS AND CONSTRUCTORS, INC.
LOS ANGELES, CALIFORNIA
U.S. ENERGY R&D ADMINISTRATION
IDAHO OPERATIONS OFFICE
IDAHO FALLS, IDAHO
DWG NO 1495-CPP-659-C-243
REV 4
INDEX CODE NUMBER
200 0659 62 287 132394
FLUOR CONTRACT 453604

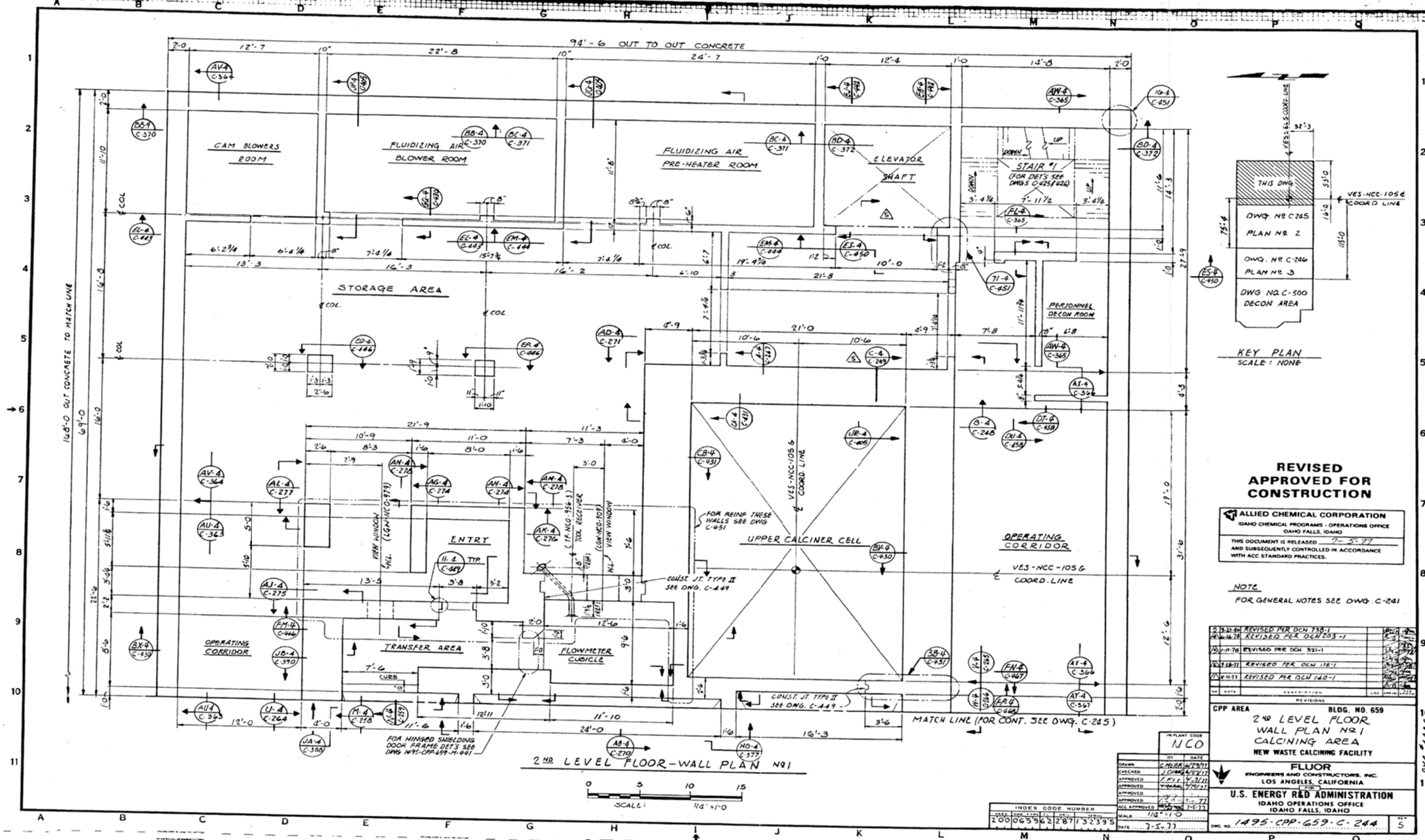
94'-6 OUT TO OUT CONCRETE
CAM BLOWERS ROOM
FLUIDIZING AIR BLOWER ROOM
FLUIDIZING AIR PRE-HEATER ROOM
ELEVATOR SHAFT
STAIR #1 (FOR DET'S SEE DWGS C-425 & 426)
STORAGE AREA
PERSONNEL DECON ROOM
ENTRY
UPPER CALCINER CELL
OPERATING CORRIDOR
TRANSFER AREA
FLOWMETER CUBICLE
VES-NCC-105 & COORD. LINE
FOR REINF. THESE WALLS SEE DWG C-451
CONST. JT. TYPE II SEE DWG. C-449
FOR HINGED SHIELDING DOOR FRAME DET'S SEE DWG 1495-CPP-659-M-441
MATCH LINE (FOR CONT. SEE DWG. C-245)
168'-0 OUT CONCRETE TO MATCH LINE
2ND LEVEL FLOOR-WALL PLAN No 1
SCALE: 1/4" = 1'-0
KEY PLAN
SCALE: NONE
THIS DWG
DWG. No C-245 PLAN No 2
DWG. No C-246 PLAN No 3
DWG No C-500 DECON AREA
VES-NCC-105 & COORD LINE
REVISED APPROVED FOR CONSTRUCTION
ALLIED CHEMICAL CORPORATION
IDAHO CHEMICAL PROGRAMS - OPERATIONS OFFICE
IDAHO FALLS, IDAHO
THIS DOCUMENT IS RELEASED 7-5-77 AND SUBSEQUENTLY CONTROLLED IN ACCORDANCE WITH ACC STANDARD PRACTICES.
NOTE
FOR GENERAL NOTES SEE DWG. C-241
REVISED PER DCN 738-1
REVISED PER DCN 203-1
REVISED PER DCN 321-1
REVISED PER DCN 178-1
REVISED PER DCN 140-1
REVISIONS
CPP AREA
BLDG. NO. 659
2ND LEVEL FLOOR WALL PLAN No 1 CALCINING AREA
NEW WASTE CALCINING FACILITY
FLUOR
ENGINEERS AND CONSTRUCTORS, INC.
LOS ANGELES, CALIFORNIA
U.S. ENERGY R&D ADMINISTRATION
IDAHO OPERATIONS OFFICE
IDAHO FALLS, IDAHO
DWG. NO. 1495-CPP-659-C-244
REV 5
IN PLANT CODE NCO
INDEX CODE NUMBER
200 065962 287 132395
FLUOR CONTRACT 453504
PKG. #4A,B,C
132395

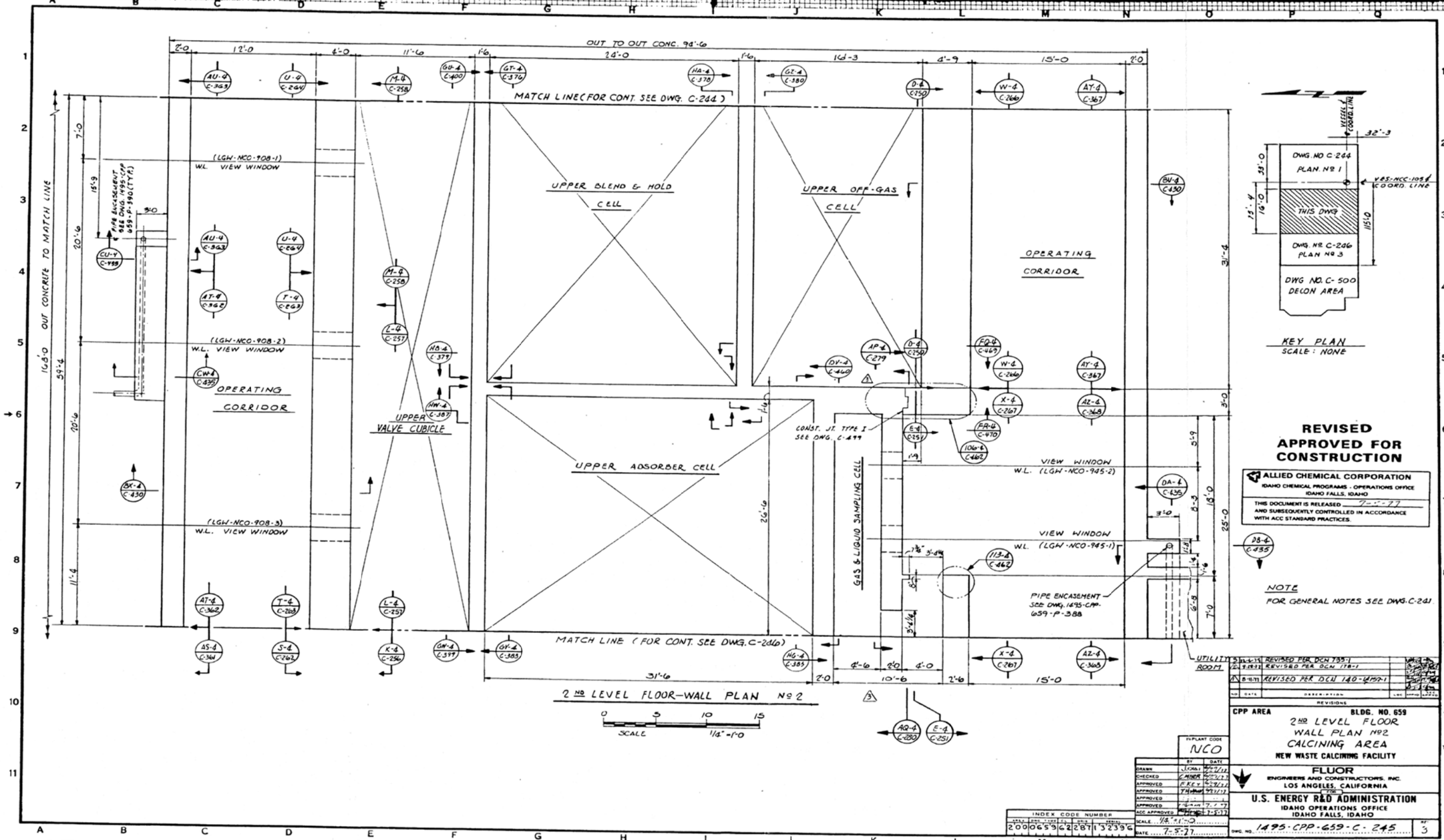

OUT TO OUT CONC. 94'-6
MATCH LINE (FOR CONT. SEE DWG. C-244)
MATCH LINE (FOR CONT. SEE DWG. C-246)
OUT CONCRETE TO MATCH LINE
168'-0
UPPER BLEND & HOLD CELL
UPPER OFF-GAS CELL
OPERATING CORRIDOR
UPPER VALVE CUBICLE
UPPER ADSORBER CELL
GAS & LIQUID SAMPLING CELL
CONST. JT. TYPE I SEE DWG. C-499
VIEW WINDOW W.L. (LGW-NCO-945-2)
VIEW WINDOW W.L. (LGW-NCO-945-1)
PIPE ENCASEMENT SEE DWG. 1495-CPP-659-P-388
UTILITY ROOM
2ND LEVEL FLOOR-WALL PLAN No 2
SCALE 1/4"=1'-0
KEY PLAN
SCALE: NONE
DWG. NO. C-244 PLAN No 1
THIS DWG
DWG. No. C-246 PLAN No 3
DWG NO. C-500 DECON AREA
REVISED APPROVED FOR CONSTRUCTION
ALLIED CHEMICAL CORPORATION
IDAHO CHEMICAL PROGRAMS - OPERATIONS OFFICE
IDAHO FALLS, IDAHO
THIS DOCUMENT IS RELEASED 7-5-77 AND SUBSEQUENTLY CONTROLLED IN ACCORDANCE WITH ACC STANDARD PRACTICES.
NOTE
FOR GENERAL NOTES SEE DWG. C-241
REVISED PER DCN 755-1
REVISED PER DCN 178-1
REVISED PER DCN 140-4157-1
CPP AREA
BLDG. NO. 659
2ND LEVEL FLOOR WALL PLAN No 2
CALCINING AREA
NEW WASTE CALCINING FACILITY
FLUOR
ENGINEERS AND CONSTRUCTORS, INC.
LOS ANGELES, CALIFORNIA
U.S. ENERGY R&D ADMINISTRATION
IDAHO OPERATIONS OFFICE
IDAHO FALLS, IDAHO
1495-CPP-659-C-245
FLUOR CONTRACT 453504
INDEX CODE NUMBER

132396

94'-6 OUT TO OUT CONCRETE

MATCH LINE (FOR CONT. SEE DWG. C-245)

163'-0 OUT CONCRETE TO MATCH LINE

W.L VIEW WINDOW

LGW-NCO-910-2

OPERATING CORRIDOR

UPPER FILTER CELL

UPPER HOT SUMP TANK REMOVAL CELL

ENTRY

W.L VIEW WINDOW (LGW-NCO-980)

CRANE MAINT & TRANSF. AREA

OFF-GAS BLOWER CELL

STAIR #2

DECON AREA

STAIR #2, FOR DETAIL SEE DWGS C-421 & C-422

MATCH LINE (FOR CONT. SEE DWG. C-500)

FOR DRAIN SEE DWG. P-388

UTILITY ROOM

PIPE ENCASEMENT SEE DWG #ES CPP-659-P-388

OPERATING CORRIDOR

ENTRY

TYP

ES-NCC-105 & COORD LINE

DWG. NO C-244 PLAN NO 1

DWG. NO C-245 PLAN NO 2

THIS DWG

DWG NO C-500 DECON AREA

KEY PLAN
SCALE : NONE

2ND LEVEL FLOOR-WALL PLAN NO 3

SCALE: 1/8"=1'-0

NOTE
FOR GENERAL NOTES SEE DWG. C-241

REVISED
APPROVED FOR CONSTRUCTION

ALLIED CHEMICAL CORPORATION
IDAHO CHEMICAL PROGRAMS - OPERATIONS OFFICE
IDAHO FALLS, IDAHO

THIS DOCUMENT IS RELEASED 7-5-77
AND SUBSEQUENTLY CONTROLLED IN ACCORDANCE WITH ACC STANDARD PRACTICES.

NO	DATE	DESCRIPTION	BY	APPD
4	4-16-79	REVISED PER DCN 203-1		
3	7-18-77	REVISED PER DCN 178-1		
2	8-24-77	REVISED PER DCN 140-1 & 192-1		

REVISIONS

CPP AREA BLDG. NO. 659

2ND LEVEL FLOOR
WALL PLAN NO 3
CALCINING AREA
NEW WASTE CALCINING FACILITY

FLUOR
ENGINEERS AND CONSTRUCTORS, INC.
LOS ANGELES, CALIFORNIA

FOR
U.S. ENERGY R&D ADMINISTRATION
IDAHO OPERATIONS OFFICE
IDAHO FALLS, IDAHO

DWG. NO. 1495-CPP-659-C-246 REV 3

	BY	DATE
DRAWN	J. Yost	4/27/77
CHECKED	C. Hall	5/27/77
APPROVED	F.E.L.	5/27/77
APPROVED	T. Hall	5/27/77
APPROVED	H. [illegible]	[illegible]
APPROVED	[illegible]	7-1-77
ACC APPROVED	[illegible]	7-5-77

IN PLANT CODE: NCO

INDEX CODE NUMBER: 2 000 659 6 2 287 1 323 9 7

SCALE: 1/4"=1'-0

DATE: 7-5-77

FLUOR CONTRACT 4555-04

PAGE 1 OF 1

DRAWING NUMBER

DRAWING NUMBER

DRAWING NUMBER

DRAWING NUMBER

193997

SECTION G-8 (LOOKING WEST) C-292 C-293
FOR SLAB REINF. SEE DWG C-299
1ST LEVEL EL. 4917'-0
H.P. SLAB EL. 4917'-4
EL 4916'-0 BOT. OF CONC.
#5-CONT.
#7@8 T.&B.
#8@6
#8@6 T.&B.
#5 TIES
3½" CL. TYP.
L.P. EL. 4917'-2
RAMP
#4 x 4'-0 LG. DOWELS @ 18
#7@6
#5@10
2" CLR (TYP.)
STORAGE AREA
OPERATING CORRIDOR
SECTION H-8 (LOOKING NORTH) C-292 & C-325
FOR SLAB REINF SEE DWG C-325
1ST LEVEL EL. 4917'-0
5-#8 T.&B.
3-#8 T.&B.
2-#8 EA. SIDE @EQ. SPC'G.
EL. 4914'-3
FAR SIDE
#5 ☐@6
#8@6 DOWELS
6'-0 LAP
4'-3 LAP
SEE N-4 C-259 FOR WALL ELEVATION & DETAILS
SEE EQ-4 C-446 FOR COLUMN ELEVATION & DETAILS
STORAGE AREA
½" x 6⅛" WELDED NELSON STUDS OR EQUAL
ELEVATION
PLAN
5/8" PL
DETAIL 16-8 C-291
SCALE: 3" = 1'-0
SECTION K-8 C-292
EL. VARIES H.P. EL. 4917'-4 L.P. EL. 4917'-2
EL. 4916'-0
#4 x 4'-0 LONG DOWELS @ 18
SECTION L-8 C-292
DOWELS TO MATCH SLAB SEE SECT. N-13 DWG C-340
EL. 4917'-0 T.O. CONC.
#5 U@10"
NOTE: SEE DWG C-340 & 421 FOR WALL & SLAB DET. NOT SHOWN.
SECTION M-8 C-292
SEE N-8 C-293 FOR A. BOLTS
#5 CONT.
#4 x 4'-0 LONG DOWELS @ 18
#5@18
SECTION N-8 C-292
½" A. BOLT W/1-HEX. NUT EA. TYPE L, SPACED @ 2'-0 O/C & @ 6" MAX. FROM ENDS. (PROJ. = 1")
6" CURB
EL. 4917'-0 TO. CONC.
#5@18"
SECTION P-8 C-292
SEE N-8 C-293 FOR A. BOLTS
8" CURB
4'-6 LAP
H.P. EL. 4917'-4
RAMP
SLOPE
#8@6 T.&B.
#7@8 T.&B.
3'-3 LAP
1" RECESS
EL. 4916'-0
SECTION Q-8 C-291
DOWELS TO MATCH EXISTING DOWELS
#5 OR #7 EXISTING DOWELS
LAP CLASS "C"
#7@8" T.&B.
#8@6" T.&B.
FOR BEAM DETAILS SEE SECT. GG-4 C-457
SECTION J-8 C-291
#4@12 DOWELS (ALT. HOOK)
NOTE: FOR GENERAL NOTES SEE DWG. C-241.
SCALE: ½" = 1'-0
REVISED APPROVED FOR CONSTRUCTION
ALLIED CHEMICAL CORPORATION
IDAHO CHEMICAL PROGRAMS - OPERATIONS OFFICE
IDAHO FALLS, IDAHO
THIS DOCUMENT IS RELEASED 10-4-77
AND SUBSEQUENTLY CONTROLLED IN ACCORDANCE WITH ACC STANDARD PRACTICES.
3 5-11-78 REVISED PER DCN 405-1
2 2-21-78 REVISED PER DCN 341-1
1 11-7-77 REV. PER DCN 205-1
REVISIONS
CPP AREA BLDG. NO. 659
1ST LEVEL SECTIONS & DETAIL
CALCINING AREA
NEW WASTE CALCINING FACILITY
IN PLANT CODE NCM
FLUOR ENGINEERS AND CONSTRUCTORS, INC.
LOS ANGELES, CALIFORNIA
U.S. ENERGY R&D ADMINISTRATION
IDAHO OPERATIONS OFFICE
IDAHO FALLS, IDAHO
INDEX CODE NUMBER 2000659 62 287 132444
SCALE: ½" = 1'-0 U.N.
DATE: 10-3-77
DWG. NO. 1495-CPP-659-C-293 REV. 3
PKG. #8
FLUOR CONTRACT #453509
132444

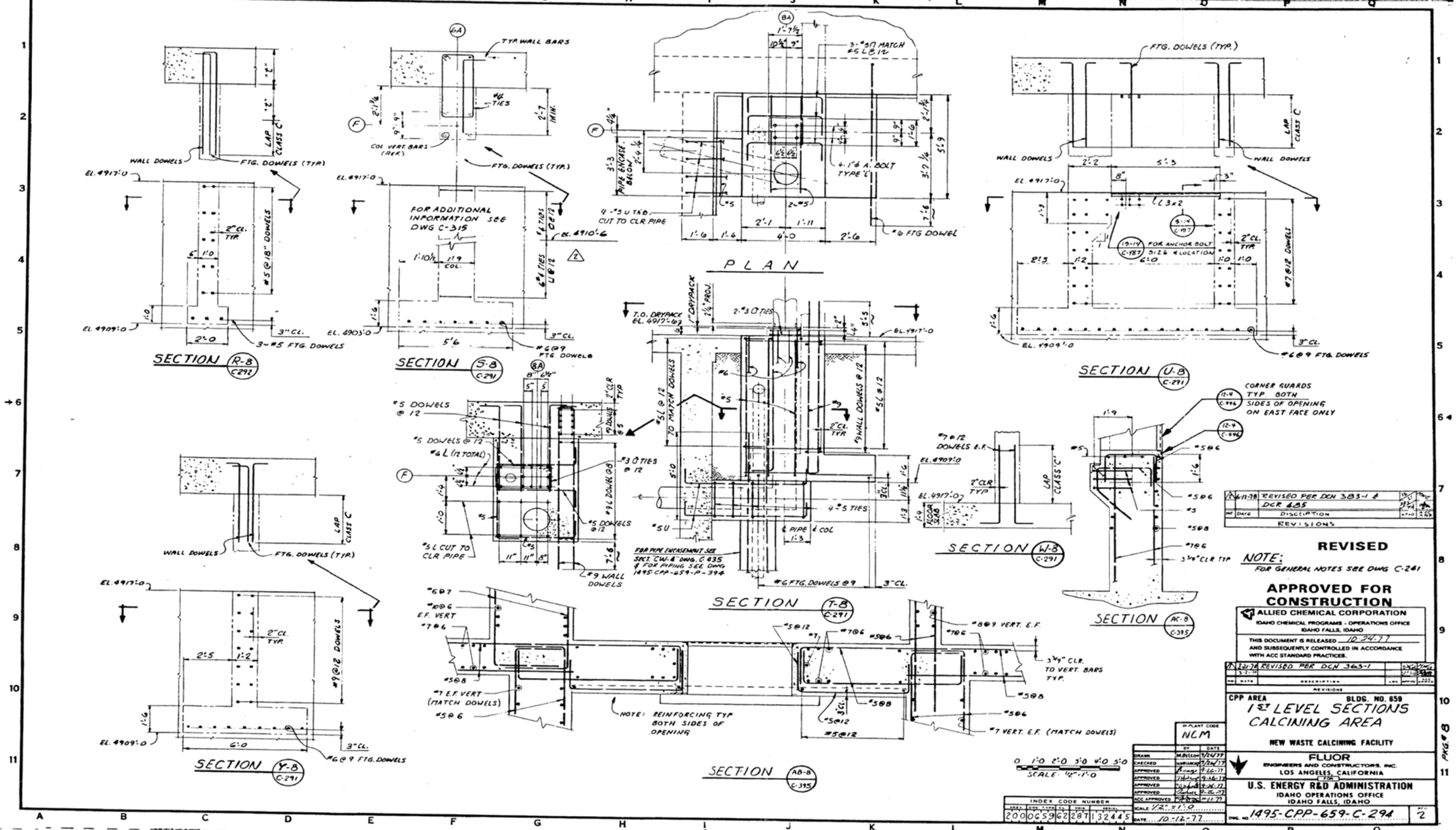

PLAN
SECTION R-8 C-292
SECTION S-8 C-291
SECTION U-8 C-291
SECTION W-8 C-291
SECTION T-8 C-291
SECTION AC-8 C-395
SECTION Y-8 C-291
SECTION AB-8 C-395
FOR ADDITIONAL INFORMATION SEE DWG C-315
FOR PIPE ENCASEMENT SEE SECT. "CW-4" DWG. C-435 & FOR PIPING SEE DWG 1495-CPP-659-P-394
NOTE: REINFORCING TYP BOTH SIDES OF OPENING
CORNER GUARDS TYP. BOTH SIDES OF OPENING ON EAST FACE ONLY
REVISED PER DCN 383-1 & DCR 485
REVISIONS
REVISED
NOTE: FOR GENERAL NOTES SEE DWG C-241
APPROVED FOR CONSTRUCTION
ALLIED CHEMICAL CORPORATION
IDAHO CHEMICAL PROGRAMS - OPERATIONS OFFICE
IDAHO FALLS, IDAHO
THIS DOCUMENT IS RELEASED 10-24-77 AND SUBSEQUENTLY CONTROLLED IN ACCORDANCE WITH ACC STANDARD PRACTICES.
REVISED PER DCN 363-1
CPP AREA
BLDG. NO. 659
1ST LEVEL SECTIONS CALCINING AREA
NEW WASTE CALCINING FACILITY
FLUOR
ENGINEERS AND CONSTRUCTORS, INC.
LOS ANGELES, CALIFORNIA
U.S. ENERGY R&D ADMINISTRATION
IDAHO OPERATIONS OFFICE
IDAHO FALLS, IDAHO
1495-CPP-659-C-294
SCALE: 1/2"=1'-0
DATE 10-12-77
INDEX CODE NUMBER
200 0659 62 287 132445
FLUOR CONTRACT #453504
132445

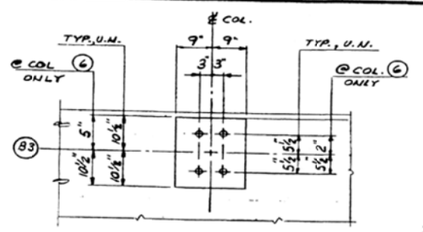

PLAN

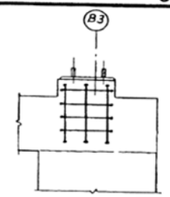

SECTION @ COL. (G) ONLY

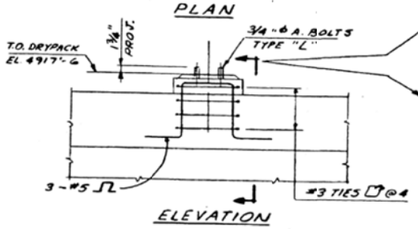

ELEVATION

DETAIL (2-B) C-292

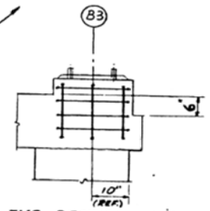

TYP. SECTION, U.N.

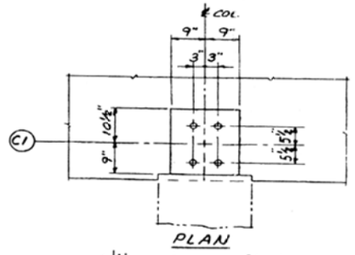

PLAN

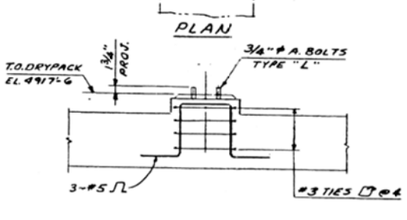

ELEVATION

DETAIL (3-B) C-292

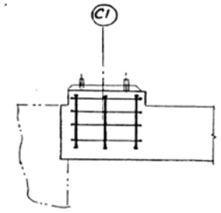

SECTION

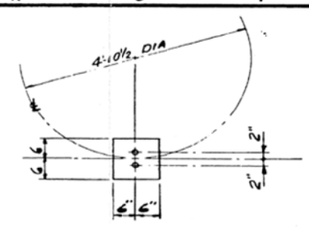

PLAN

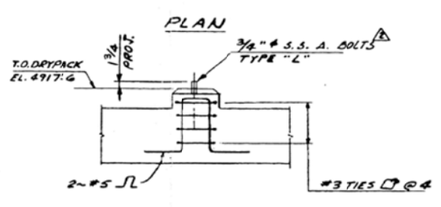

ELEVATION

DETAIL (4-B) C-292

UTILITY CORRIDOR OR ROOM

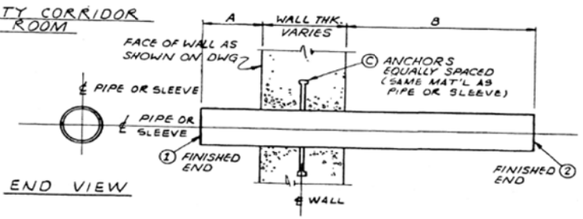

END VIEW

SIDE VIEW

DETAIL	①	②	Ⓐ	Ⓑ	ⓒ	PIPE SIZE	LINE CLASS
6-8	PLAIN END	THREADED END	1'-0	3'-0	NONE	1½" SCHED. 40S	AF
7-8	BEVEL END	BEVEL END	1'-0	2'-8 3/16	2-½"⊕ x 6½" LG. NELSON STUD OR EQUAL	6" SCHED. 40	NC
8-8	BEVEL END	BEVEL END	1'-0	3'-0	2-½"⊕ x 6½" LG. NELSON STUD OR EQUAL.	6" SCHED. 40S	AF
9-8	BEVEL END	BEVEL END	(SEE PLAN ON DWG. C-296)	(SEE PLAN ON DWG. C-296)	* 2-¾"⊕ x 6½" LG. NELSON STUD OR EQUAL	8" SCHED. 40	NB
10-8	PLAIN END	BEVEL END			3-⅜"⊕ x 8⅜" LG. NELSON STUD OR EQUAL.	14" SCHED. 10	
13-8	BEVEL END	BEVEL END	1'-0	2'-9 3/16	2-⅞"⊕ x 6½" LG. NELSON STUD OR EQUAL	1" SCHED. 40	NC
17-8	PLAIN END	PLAIN END	6"	6"	2-⅞"⊕ x 6½" LG. NELSON STUD OR EQUAL	4" SCHED. 40	NB
18-8	PLAIN END	PLAIN END	6"	6"	2-½"⊕ x 6½" LG. NELSON STUD OR EQUAL	10" SCHED. 40	NB

* ANCHOR STUD TO BE SET @ 45° ANGLE SEE PLAN ON DWG. C-296

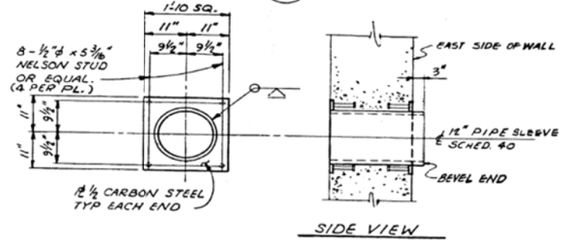

SIDE VIEW

DETAIL (11-B) C-296

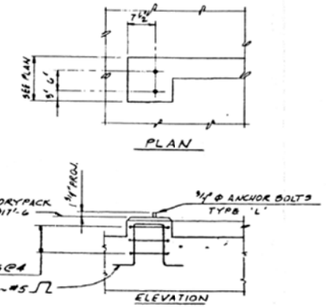

ELEVATION

DETAIL (14-B) C-292

PLAN

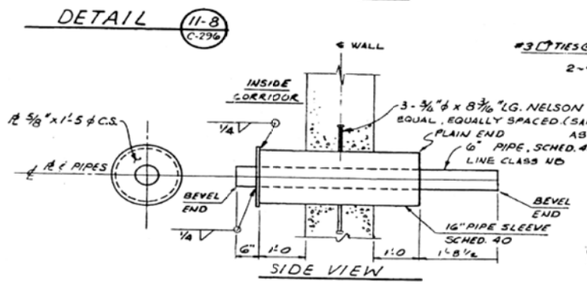

SIDE VIEW

DETAIL (12-B) C-297

0 1'-0 2'-0 3'-0 4'-0

SCALE ¾"=1'-0

NOTE:
FOR GENERAL NOTES SEE DWG. E41.

REVISED APPROVED FOR CONSTRUCTION

ALLIED CHEMICAL CORPORATION
IDAHO CHEMICAL PROGRAMS - OPERATIONS OFFICE
IDAHO FALLS, IDAHO

THIS DOCUMENT IS RELEASED 10-4-77 AND SUBSEQUENTLY CONTROLLED IN ACCORDANCE WITH ACC STANDARD PRACTICES.

IN PLANT CODE	NCM
	BY / DATE
DRAWN	10-3-77
CHECKED	10-3-77
APPROVED	10-26-77
APPROVED	10-26-77
APPROVED	10-26-77
APPROVED	10-26-77
ACC APPROVED	10-27-77
SCALE	¾"=1'-0
DATE	10-3-77

INDEX CODE NUMBER
AREA 200 | SYSTEM 659 | SEQ. NO. 62287 | REV. NO. 32446

NO	DATE	DESCRIPTION	LOC	INITIALS
REVISIONS				
A	9-1-77	REVISED PER DCN-432-1 & DCR 625		K.O. NCM
B	10-7-77	REV. PER DCN 205-1		K.O. NCM

CPP AREA — BLDG. NO. 659

1ST LEVEL DETAILS CALCINING AREA

NEW WASTE CALCINING FACILITY

FLUOR
ENGINEERS AND CONSTRUCTORS, INC.
LOS ANGELES, CALIFORNIA

FOR
U.S. ENERGY R&D ADMINISTRATION
IDAHO OPERATIONS OFFICE
IDAHO FALLS, IDAHO

DWG. NO. 1495-CPP-659-C-295 — REV. 2

FLUOR CONTRACT # 453506

PKG # 6

DRAWING UNNUMBERED

DRAWING UNNUMBERED

DRAWING UNNUMBERED

DRAWING UNNUMBERED

132946

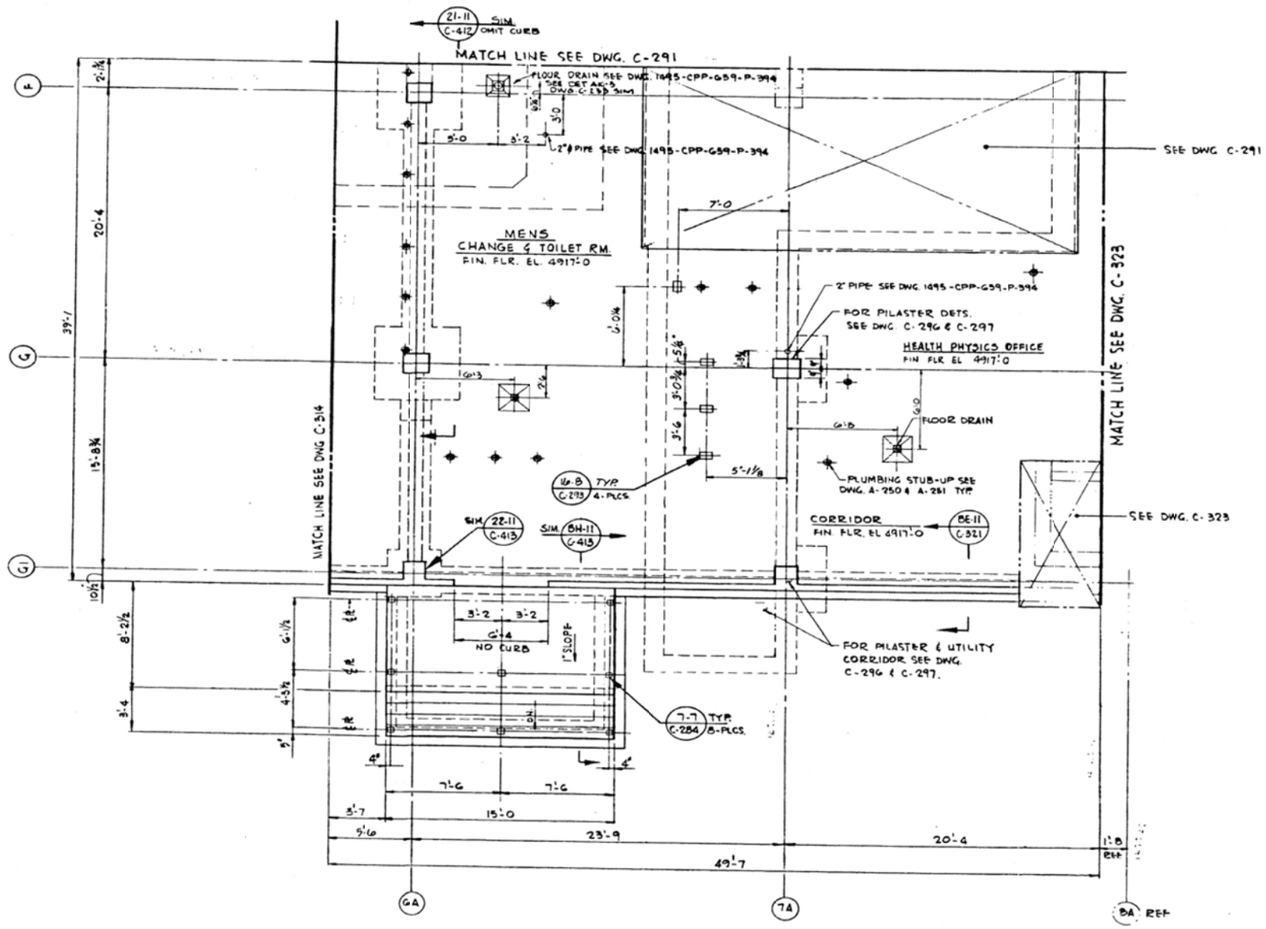

1ST LEVEL PLAN @ EL 4917'-0

SCALE: 1/4" = 1'-0

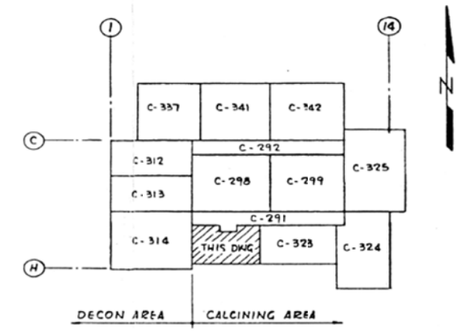

1ST LEVEL KEY PLAN

APPROVED FOR CONSTRUCTION

ALLIED CHEMICAL CORPORATION
IDAHO CHEMICAL PROGRAMS - OPERATIONS OFFICE
IDAHO FALLS, IDAHO

THIS DOCUMENT IS RELEASED 11-30-77 AND SUBSEQUENTLY CONTROLLED IN ACCORDANCE WITH ACC STANDARD PRACTICES.

NOTES:

1. FOR GENERAL NOTES SEE DWG. C-283
2. FOR PLUMBING PLANS & DETAILS SEE DWG 1495-CPP-659-A-251 & A-252
3. FOR SLAB REINF. SEE DWG C-317

NO.	DATE	DESCRIPTION	LOC	APPVD	DATE

REVISIONS

CPP AREA — BLDG. NO. 659

1ST LEVEL FLOOR & FDN. PLAN
CALCINING AREA
NEW WASTE CALCINING FACILITY

FLUOR
ENGINEERS AND CONSTRUCTORS, INC.
LOS ANGELES, CALIFORNIA

U.S. ENERGY R&D ADMINISTRATION
IDAHO OPERATIONS OFFICE
IDAHO FALLS, IDAHO

DWG. NO. 1495-CPP-659-C-315 — REV. 0

IN-PLANT CODE: NCM

	BY	DATE
DRAWN	[illegible]	8-16-77
CHECKED	ARCHER	8-16-77
APPROVED	[illegible]	8-16-77
APPROVED	[illegible]	11-16-77
APPROVED	[illegible]	11-16-77
APPROVED	[illegible]	11-16-77
ACC APPROVED	[illegible]	11-29-77

SCALE: 1/4" = 1'-0
DATE: 11-29-77

INDEX CODE NUMBER: 200 0659 62 287 132466

FLUOR CONTRACT 453504

132466

INSTRUMENT IDENTIFICATION
* FIRST LETTER — PROCESS VARIABLE OR ACTUATION
A ANALYSIS
B BURNER/FLAME
C CONDUCTIVITY (ELECT.)
DENSITY/SP. GR.
VOLTAGE (EMF)/ELECT.
RATE
QUANTITY
RATIO
(DIMENSIONAL)
H HAND (MANUALLY INITIATED)
I CURRENT/AMPS
P POWER/WATTS
K TIME
L LEVEL
M MOISTURE/HUMIDITY
N SECURITY/SAFEGUARDS
O UNCLASSIFIED
P PRESSURE/VACUUM
PD PRESSURE DIFFERENTIAL
Q QUANTITY/NUMBER
R RADIOACTIVITY
S SPEED/FREQUENCY
T TEMPERATURE
TD TEMP. DIFFERENTIAL
U MULTIVARIABLE
V VISCOSITY
W WEIGHT/FORCE
WD WEIGHT DIFFERENTIAL
X FIRE ALARM/PROTECTION & OTHER UNCLASSIFIED
Z POSITION
(* SELECT FIRST LETTER FROM TABLE ABOVE)
*A — * ALARM
*AH — * ALARM HIGH
*AL — * ALARM LOW
*C — * CONTROLLER OR CONTROL
*CV — * CONTROL VALVE (SELF ACTUATED)
*E — * ELEMENT
*G — * GLASS
*I — * INDICATOR
*IC — * INDICATING CONTROLLER
*J — * SCAN
*JR — * MULTIPOINT RECORDER
*O — * ORIFICE RESTRICTION
*P — * POINT (TEST CONNECTION)
*Q — * TOTALIZE OR EQUALIZE
*R — * RECORDER
*RC — * RECORDER CONTROLLER
*S — * SWITCH
*S O/C — * SWITCH OPEN/CLOSE
*SH — * SWITCH HIGH
*SL — * SWITCH LOW
*SV — * SAFETY VALVE
*T — * TRANSMITTER / TRANSDUCER
*V — * VALVE
*W — * WELL OR PROBE
*XS — * VIBRATION SWITCH (EXAMPLE OF UNCLASSIFIED ITEM)
(VIB)
TE
TW TEMPERATURE WELL OR TEMPERATURE ELEMENT
HS BACK LIGHTED HAND SWITCH
LIGHT-SEE LIGHT LEGEND THIS DWG.
RESISTANCE (BULB) TEMPERATURE DETECTOR
(RTD) P PURGE
CONTROL STATION
CONTROL STATION SINGLE FUNCTION
SELECTOR SWITCH (MULTI-CIRCUITS)
BY ELECT.
ELECTRICAL RELAY
LOCAL MOUNTED INSTRUMENT
LOCAL BOARD MOUNTED INSTRUMENT
* * DENOTES PANEL NO.
INSTRUMENT MOUNTED BEHIND LOCAL CONTROL BOARD
BOARD MOUNTED INSTRUMENT (CENTRAL CONTROL)
INSTRUMENT MOUNTED BEHIND MAIN CONTROL BOARD
DISTRIBUTED CONTROL SYSTEM INSTRUMENT (CENTRAL CONTROL)
INSTRUMENT WITH TWO SERVICES OR FUNCTIONS
LOGIC SYMBOLS
KY DI t — CONTINUOUS EXISTENCE OF INPUT FOR TIME t CAUSES OUTPUT TO EXIST WHEN t EXPIRES. OUTPUT TERMINATES WHEN INPUT TERMINATES.
KY DT t — EXISTENCE OF INPUT CAUSES OUTPUT TO EXIST IMMEDIATELY. OUTPUT TERMINATES WHEN INPUT HAS TERMINATED AND HAS NOT AGAIN EXISTED FOR TIME t.
OR — OR-OUTPUT EXISTS IF ONE OR MORE OF THE INPUTS EXIST.
AND — AND-OUTPUT EXISTS IF, AND ONLY IF, ALL OF THE INPUTS EXIST.
E — EXCLUSIVE OR-OUTPUT EXISTS IF ONE, AND ONLY ONE, INPUT EXISTS.
NOT-NO OUTPUT EXISTS IF AN INPUT EXISTS.
4 — INDICATES NO. FOR LOGIC DIAGRAM (SEE DWGS. 092826 THRU 092837)
I — ELECTRICAL INTERLOCK
LINE AND PIPING SYMBOLS IDENTIFICATION
MAJOR PROCESS LINE
UTILITY, MINOR PROCESS & PROCESS INSTRUMENT LINE
INSTRUMENT AIR LINE
INSTRUMENT ELECTRICAL LEAD
INSTRUMENT CAPILLARY TUBING
HYDRAULIC SIGNAL
ELECTROMAGNETIC SONIC, LIGHT BEAM OR FREQUENCY SIGNAL
HEAT TRACED LINE (SEE ABBREVIATIONS)
FLEXIBLE TUBING
REDUCTION IN LINE SIZE
R REMOTE (UNDEFINED, ELECTRICAL/INSTRUMENT AIR) CONNECTOR
RG REMOTE GRAYLOCK CONNECTOR
RGP REMOTE GRAYLOCK WITH PLATFORM
R3 REMOTE 3-BOLT CONNECTOR
R3P REMOTE 3-BOLT WITH PLATFORM
Q3J 3 BOLT QUICK DISCONNECT WITH "JUMPER"
MECHANICAL LINKAGE
MANUALLY OPERATED VALVES
BY ADDING AN OPERATOR TO THE BASIC VALVE SYMBOL, VALVE BECOMES A CONTROL VALVE.
GATE VALVE
GLOBE VALVE
CHECK VALVE
PLUG COCK
BALL VALVE
BUTTERFLY VALVE OR DAMPER
POST INDICATOR VALVE (BUTTERFLY)
NV NEEDLE VALVE
DIAPHRAGM VALVE
ANGLE VALVE
THREE-WAY VALVE
FOUR-WAY VALVE
IhV (SEE ABBREVIATIONS)
OTHER VALVES
INDICATE PROPER ABBREVIATION UNDER VALVE. EXAMPLE:
TS
CONTROL VALVES
CYLINDER OPERATED VALVE
REGULATOR SELF-CONTAINED
REGULATOR WITH EXTERNAL PRESSURE TAP
FLOW REGULATOR, SELF-CONTAINED
SOLENOID VALVE (R WITH RESET)
ONE WAY CYLINDER OPERATOR WITH HAND RESET
FO VALVE ACTION (SEE ABBREVIATIONS)
GAS (MANIFOLD OR BOTTLE) PRESSURE REGULATOR WITH INTEGRAL RELIEF VALVE
PI PRESSURE REDUCING REGULATOR WITH INTEGRAL RELIEF VALVE AND OUTPUT PRESSURE INDICATOR
M ELECTRIC MOTOR OPERATED VALVE
DIAPHRAGM OPERATED WITH HAND ACTUATOR
CYLINDER OPERATED SLIDE GATE VALVE WITH AIR PURGES
MISCELLANEOUS
JACKETED LINE
CONNECTION AND SIZE AND/OR TIE-IN NUMBER
PSV 1" x 2" SET @ 100 PSI
PRESSURE SAFETY VALVE
DRAIN FUNNEL
SP SPECIALTY ITEM
*CV X-STEAM TRAP L-CONTINUOUS DRAINER
T
CHEMICAL SEAL
PULSATION DAMPENER
PSE RUPTURE DISC (PRESSURE)
PSE RUPTURE DISC (VACUUM)
SPECTACLE BLIND (INSTALL DONUT IN LINE)
(BFP) REDUCED PRESSURE BACK FLOW PREVENTION DEVICE
TWIN BASKET MIXER
AP AIR PURGE ROTAMETER (DETAIL "G" DWG. 133457)
DEMISTER SECTION
PACKED SECTION (IDENTIFY TYPE)
TO RECEIVER
FI TARGET OR MASS UNCLASSIFIED FLOW, ETC. PRIMARY FLOW ELEMENT INTEGRAL WITH TRANSMITTER
FE ORIFICE PLATE WITH FLANGE, PIPE TAPS OR VENA CONTRACTA
FQI POSITIVE DISPLACEMENT TYPE FLOW TOTALIZER
FI ROTAMETER-TYPE FLOW INDICATOR
FE VENTURI TUBE OR FLOW NOZZLE
FE TURBINE OR PROPELLER-TYPE PRIMARY ELEMENT
FE ORIFICE PLATE IN QUICK CHANGE FITTING
FE PITOT TUBE OR PITOT-VENTURI TUBE
FJE AVERAGING TYPE PITOT TUPE
AIR SAMPLE HEAD (INCLUDES VALVE & REPLACEABLE FILTER)
SCREWED CAP
WELD CAP
RELAY FUNCTION IDENTIFICATION
*Y SEE LIST BELOW. MIN. 1/4" SIZE BOX LOCATED IN UPPER RIGHT HAND CORNER ONLY
*RELAY
A/D = ANALOG DIGITAL
1/D = INVERSE DERIVATIVE
D = DERIVATIVE OR RATE
> = HIGH - SELECTOR
< = LOW - SELECTOR
Σ = ADD
± = BIAS
÷ = DIVIDE
AVG = AVERAGE
f(x) = CHARACTERIZE
x^n = RAISE TO POWER
√ = EXTRACT SQUARE ROOT
<> = HIGH-LOW LIMITING
1:1 = BOOST
I-O = ON-OFF
S = SOLENOID
Δ = DIFFERENCE
f(t) = TIME FUNCTION
1-3 = GAIN
REV = REVERSE
X = MULTIPLY
I = INTEGRATE
= (FOR INPUT/OUTPUT OF THE FOLLOWING)
DESIGNATION — SIGNAL
E — VOLTAGE
I — CURRENT
H — HYDRAULIC
O — ELECTROMAGNETIC SONIC SIGNAL OR LIGHT BEAM
P — PNEUMATIC
R — RESISTANCE
F — FREQUENCY
MISCELLANEOUS (CONT.)
REGULATOR LUBRICATOR
FO RESTRICTION ORIFICE
BLIND FLANGE
FLEXIBLE HOSE W/ CONNECTION
TO PUMP TEMPORARY SUCTION STRAINER
BOOTLEG
VENT
SEAL LEGS
XCV T STEAM SEPARATOR AND TRAP
DIFFUSER
AIR CLEANER (COMPRESSOR SUCTION)
SPECTACLE BLIND (INSTALL DISC IN LINE)
Y-TYPE STRAINER W/ BLOW-OFF VALVE
TEE TYPE STRAINER
SPRAY NOZZLE
DENOTES ELECTRICAL TIE IN POINT
FILTER
SPRAY RING OR HEADER
6"-A 6"-N IDENTIFIES LINE SPEC. & SIZE
A N IDENTIFIES CHANGE IN MATERIAL
- PIPING UNION
- HOSE CONNECTION
- FIRE HYDRANT
- ATMOSPHERIC PRESSURE SENSING HEAD
- PIPE TO TUBE ADAPTER
EJECTOR, EDUCTOR, JET, INJECTOR OR EXHAUSTER
FL FLUSHING CONNECTION (DETAIL "H" DWG. 133456)
EXPANSION JOINT
WP WATER PURGE ROTAMETER (DETAIL "E" DWG. 133452)
PIPING MAT'L ABBREVIATIONS
AA MONEL 400
AB NITRONIC 50
AC 300 SERIES STAINLESS STEEL
AR 300 SERIES STAINLESS STEEL
CA CARPENTER 20 Cb3
HA HASTELLOY G-30
HC HASTELLOY C-4 or C-22
HG HASTELLOY G-30
ND CPVC
NI CONCRETE
NJ GALVANIZED CARBON STEEL
NK COPPER TUBING
NM STAINLESS STEEL TUBING
NN CARBON STEEL
NO PVC-DWV
NQ ALUMINUM TUBING
NR DUCTILE IRON
NT CAST IRON
NW PVC
NY ABS PLACTIC
NOTES
(1) PIPING SYMBOLS ILLUSTRATED ARE THOSE MOST OFTEN USED.
(2) VESSEL TRIM, LINE NUMBER, ETC. APPLIES TO VENTS, DRAINS, SC, LG, LA AND LC CONN. ON THAT PARTICULAR PIECE OF EQUIPMENT.
(3) INSTRUMENT IDENTIFICATIONS AS ILLUSTRATED ARE FLUOR STANDARDS BASED ON THE INSTRUMENT SOCIETY OF AMERICA S-5.1.
(4) WHEN NECESSARY, PIPING AND/OR EQUIPMENT SYMBOLS MAY BE INCLUDED AS PART OF AN INSTRUMENT LOOP.
(5) DIMENSION UNDER LS BALLOON INDICATES POINT OF ACTUATION OF LS UNIT ABOVE TANGENT LINE OR BOTTOM OF HORIZONTAL VESSEL.
(6) PIPING COMPONENTS NOT IDENTIFIED BY INSTRUMENT OR MECHANICAL EQUIPMENT NUMBERS, ETC.; AND NOT COVERED BY THE PIPING MATERIAL SPECIFICATION, ARE IDENTIFIED BY A SPECIALTY ITEM NUMBER.
HEAT TRACING IDENTIFICATION
4"-SGND-1700-ST(H)(2-3/8")
HEAT TRACING OR INSULATION SYMBOL FROM BELOW
QUANTITY AND SIZE OF TRACER
PURPOSE FOR TRACING *
ET(*)- ELECTRIC TRACED AND INSULATED
ETT(*)- ELECTRIC TRACED WITH HEAT TRANSFER CEMENT AND INSULATED
SJ(*)- STEAM JACKETED PIPE AND INSULATED
ST(*)- STEAM TRACED AND INSULATED
STS(*)- STEAM TRACED WITH SPACERS AND INSULATED
STT(*)- STEAM TRACED WITH HEAT TRANSFER CEMENT AND INSULATED
* (W) WINTERIZATION
(H) HEAT CONSERVATION
TB - HEAT TRACED VALVE BODY AND INSULATED
TBB - HEAT TRACED VALVE BODY AND BONNET AND INSULATED
ABBREVIATIONS
BD BLOWDOWN
CO CHAIN OPERATED
CSC CAR SEAL CLOSE
CSO CAR SEAL OPEN
CW COOLING WATER
CWS COOLING WATER SUPPLY
CWR COOLING WATER RETURN
Ic NSULATION COLD
Ih INSULATION HOT
Is INSULATION SAFETY
IhV INSULATED VALVE BODY
IVH INSTRUMENT VENT HEADER
LC LOCK CLOSE
LO LOCK OPEN
LP LOW PRESSURE
LPT LOW POINT
IAS INSTRUMENT AIR SUPPLY (FROM COMP AIR SUPPLY)
HOA HAND-OFF-AUTO
P/VAC COMPOUND PRESS VACUUM
VAC VACUUM PRESS
COND CONDUCTIVITY
S.G. SIMI GRAPHIC
H&V HWS HEATING & VENT HOT WATER SUPPLY
H&V HWR HEATING & VENT HOT WATER RETURN
OSA OUTSIDE AIR
NC NORMALLY CLOSED
NO NORMALLY OPEN
NV NEEDLE VALVE
PO PUMP OUT
SC SAMPLE CONNECTION
SO STEAM OUT
SP.GR SPECIFIC GRAVITY
SP SET POINT
TC THERMOCOUPLE GAUGE
T/T TANGENT TO TANGENT
TSO TIGHT SHUT OFF
H.PT HIGH POINT
HP HIGH PRESSURE
FO FAIL OPEN
FL FAIL LOCKED
FI FAIL INDEFINITE
FC FAIL CLOSE
(F&P) FURNISHED & PIPED
(F) FURNISHED
GTS GENERAL TWIN SEAL
ORB ORBIT VALVE
FP FULL PORT
OV OPERATING VALVE
FD FLOOR DRAIN
QC QUICK CONNECT COUPLING
MVD MANUAL VALVE DAMPER
HEATING & VENTILATING LEGEND
SUPPLY AIR
RECIRC. & EXHAUST AIR
TRANSFER AIR
MANUAL VOLUME DAMPER
MANUAL VOLUME DAMPER WITH REMOTE OPERATOR
F.D. FIRE DAMPER
AUTO. DAMPER
AUTO. DAMPER WITH HAND ACTUATOR
ONE-WAY DAMPER
DEEP PLEATED FILTER WITH ROUGHING PREFILTER
MOISTURE-SEPARATOR PREFILTER COMBINATION
OUTSIDE AIR INTAKE LOUVER
HEPA FILTER
ROUGHING FILTER
RESTRICTION, ORIFICE
MIST ELIMINATOR
AUTO. DAMPER (DIAPHRAGM OPERATOR)
AUTO. DAMPER WITH HAND ACTUATOR (DIAPHRAGM OPERATOR)
LIGHT LEGEND
A AMBER — SYSTEM ENERGIZED, VALVE CLOSED, HEATER OFF, PUMP NOT RUNNING, ETC.
B BLUE — AUTOMATIC MODE
G GREEN — NORMAL OPERATING CONDITION VALVE OPEN, HEATER ON, PUMP RUNNING. ETC.
R RED — ALARM CONDITION
RCRA LINE DESIGNATIONS
RCRA CONTROLLED
RCRA EXEMPT
RCRA CLOSURE
VOG
ALLIED CHEMICAL CORPORATION
IDAHO CHEMICAL PROGRAMS - OPERATIONS OFFICE
IDAHO FALLS, IDAHO
THIS DOCUMENT IS RELEASED 9-27-77
AND SUBSEQUENTLY CONTROLLED IN ACCORDANCE WITH ACC STANDARD PRACTICES.
7 | 8-6-02 | SEE DAR 92537 | MEW | DEJ 8-15-02
NO | DATE | DESCRIPTION | APPROVED
CPP AREA
BLDG. NO. 659
FLOW DIAGRAM LEGEND, SYMBOLS AND ABBREVIATIONS
NEW WASTE CALCINING FACILITY
FLUOR
LOS ANGELES, CALIFORNIA
U.S. ENERGY R & D ADMINISTRATION
IDAHO OPERATIONS OFFICE
IDAHO FALLS, IDAHO
NCO
CONTROLLED DOCUMENT
DRAWN 9-7-77
CHECKED 9-8-77
APPROVED 9-8-77
ACC APPROVED
SCALE
9-28-77
INDEX CODE NUMBER
AREA | DWG TYPE | CL | ORIG | SERIAL
200 | 0659 | 24 | 287 | 133376
1495-CPP-659-F-100
REV 7
INFORMATION ONLY
Date: 08/15/02 - 08:02 A.M.

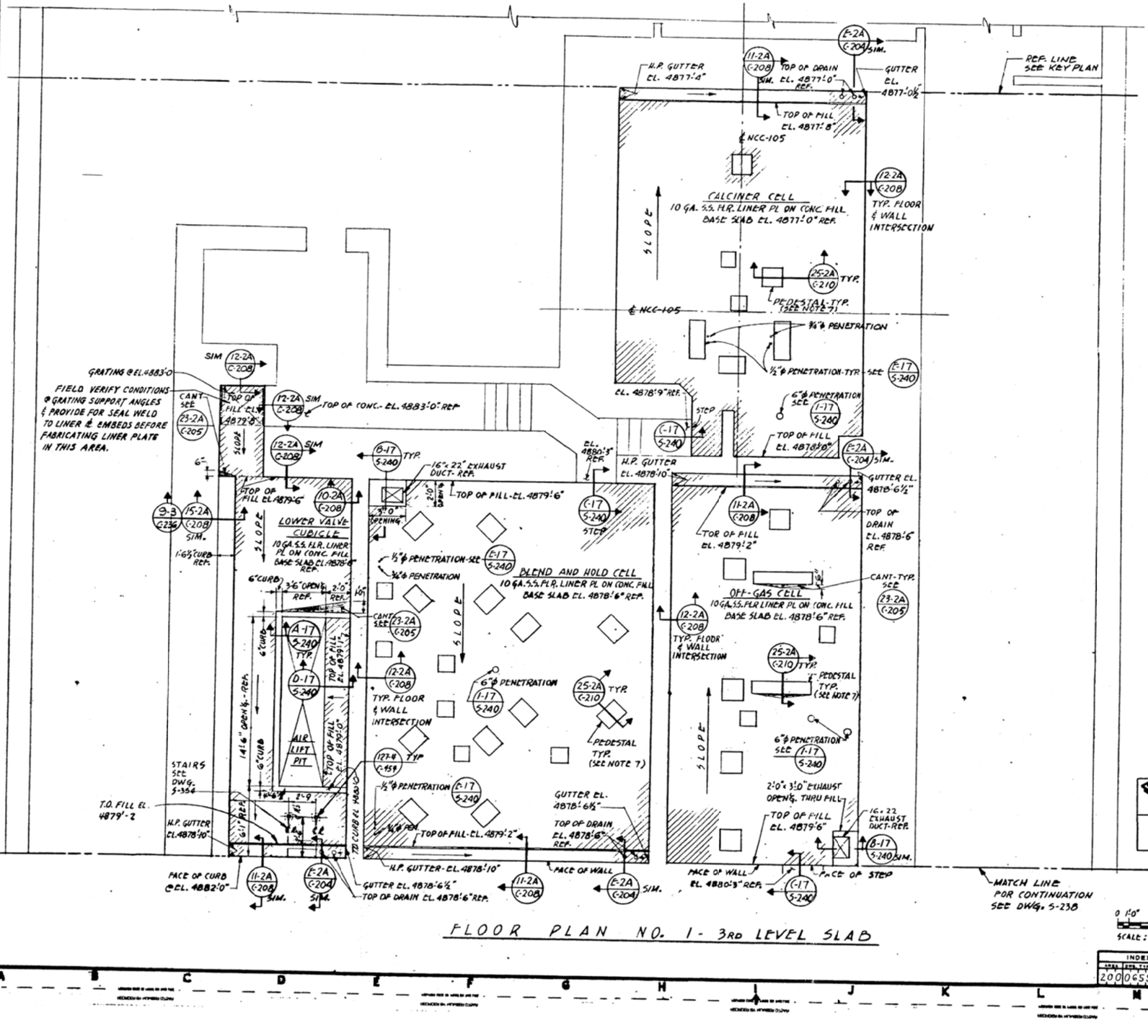

FLOOR PLAN NO. 1 - 3RD LEVEL SLAB

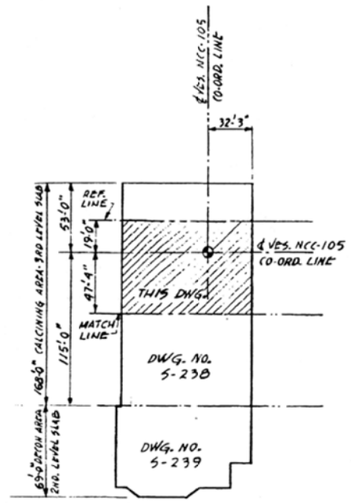

KEY PLAN
SCALE : NONE

NOTES

1. CROSS-HATCHING INDICATES LIMITS OF FLOOR LINER PLATE.
2. 10 GA. FLOOR LINER PLATE SHALL BE INSTALLED OVER CONCRETE FILL IN ACCORDANCE WITH DETAILS SHOWN ON DWG. C-207.
3. FOR STAINLESS STEEL FLOOR LINER PLATE NOTES, SEE DWG. C-207.
4. FOR CONCRETE SPECIFICATION, SEE SP-453504-10-1. f'_c=4000 P.S.I.
5. CONCRETE FILL SURFACES SHALL RECEIVE A STEEL TROWELLED FINISH WITHIN CLASS "A" TOLERANCES. SEE SP-453504-10-1.
6. FOR LOCATION OF 2'-0" × 3'-0" EXHAUST OPENINGS AND DUCT LOCATIONS WITHIN OPENINGS, SEE HVAC DWGS. H-301 THROUGH H-305.
7. EXACT LOCATION & SIZE OF PEDESTALS & PENETRATIONS SHALL BE VERIFIED BY THE CONTRACTOR.
8. FOR BASE SLAB DIMENSIONS, PEDESTAL SIZES & LOCATIONS, & PENETRATION LOCATIONS FOR PLAN NO. 1, SEE DWGS. C-225 & C-226. FOR WALL LOCATIONS FOR PLAN NO. 1, SEE C-241, & C-242.
9. WORK THIS DWG. WITH DWGS. S-238, S-240, C-204, C-205, C-207, C-208, C-210.

APPROVED FOR CONSTRUCTION

ALLIED CHEMICAL CORPORATION
IDAHO CHEMICAL PROGRAMS - OPERATIONS OFFICE
IDAHO FALLS, IDAHO

THIS DOCUMENT IS RELEASED 12-14-77 AND SUBSEQUENTLY CONTROLLED IN ACCORDANCE WITH ACC STANDARD PRACTICES.

CONTROLLED DOCUMENT CLASS I

0 1'-0" 5'-0" 10'-0"
SCALE: ½"=1'-0"

INDEX CODE NUMBER						
AREA	SYS	TYP	SEQ	SEQ	SEQ	SEQ
2	00	659	G0	28T	134	G19

W-PLANT CODE NCC		
	BY	DATE
DRAWN	HARDENBROOK	11-28-77
CHECKED	G.R.D.	11-28-77
APPROVED		11-28-77
APPROVED		11-30-77
APPROVED		11-28-77
APPROVED		11-28-77
ACC APPROVED		12-13-77
SCALE:	1/4" = 1'-0" & NOTED	
DATE	12-13-77	

NO.	DATE	DESCRIPTION	LOC	APPVD	ENGR
		REVISIONS			

CPP AREA — BLDG. NO. 650

STAINLESS STEEL FLOOR LINER PLATE INSTALLATION
FLOOR PLAN NO. 1
CALCINING AREA
NEW WASTE CALCINING FACILITY

FLUOR
ENGINEERS AND CONSTRUCTORS, INC.
LOS ANGELES, CALIFORNIA

U.S. ENERGY R&D ADMINISTRATION
IDAHO OPERATIONS OFFICE
IDAHO FALLS, IDAHO

DWG. NO. 1495-CPP-659-S-237 REV. 0

FLUOR CONTRACT 453504

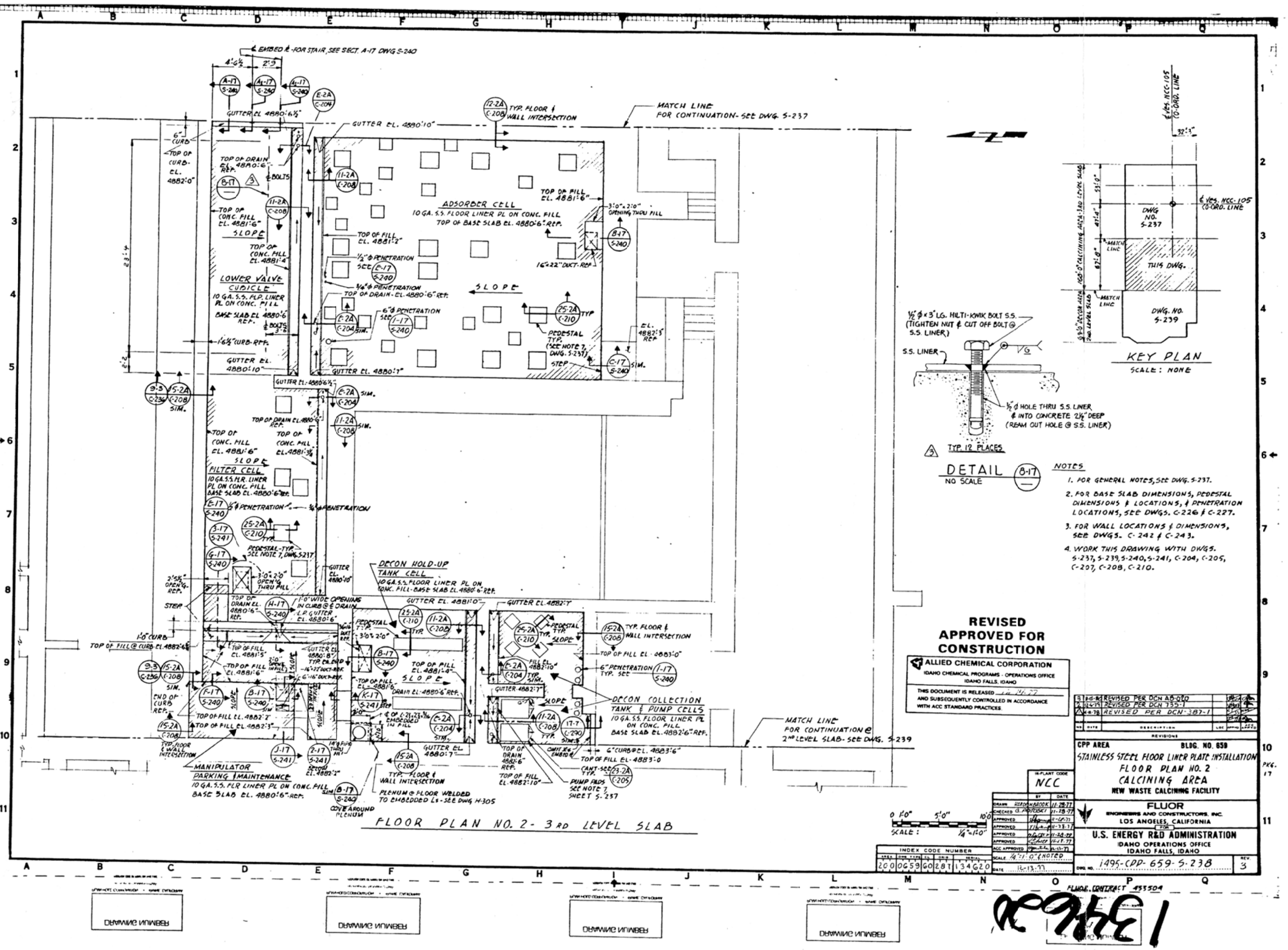
EMBED ℄ - FOR STAIR, SEE SECT. A-17 DWG S-240
GUTTER EL. 4880'-6½"
GUTTER EL. 4880'-10"
TYP. FLOOR & WALL INTERSECTION
MATCH LINE FOR CONTINUATION - SEE DWG. S-237
6" CURB
TOP OF CURB - EL. 4882'-0"
TOP OF DRAIN EL. 4880'-6" REF.
BOLTS
TOP OF CONC. FILL EL. 4881'-6"
SLOPE
TOP OF CONC. FILL EL. 4881'-4"
LOWER VALVE CUBICLE
10 GA. S.S. FLR. LINER PL ON CONC. FILL
BASE SLAB EL. 4880'-6" REF.
1'-6½" CURB REF.
GUTTER EL. 4880'-10"
GUTTER EL. 4880'-7"
ADSORBER CELL
10 GA. S.S. FLOOR LINER PL ON CONC. FILL
TOP OF BASE SLAB EL. 4880'-6" REF.
TOP OF FILL EL. 4881'-6"
3'-0" x 2'-0" OPENING THRU FILL
TOP OF FILL EL. 4881'-2"
½" ℄ PENETRATION SEE E-17 S-240
16" x 22" DUCT REF.
¾" ℄ PENETRATION
TOP OF DRAIN EL. 4880'-6" REF.
6" ℄ PENETRATION SEE I-17 S-240
SLOPE
PEDESTAL TYP. (SEE NOTE 7, DWG. S-237)
STEP
EL. 4882'-5" REF.
GUTTER EL. 4880'-6½"
TOP OF DRAIN EL. 4880'-6" REF.
TOP OF CONC. FILL EL. 4881'-6"
TOP OF CONC. FILL EL. 4881'-3½"
FILTER CELL
10 GA. S.S. FLR. LINER PL ON CONC. FILL
BASE SLAB EL. 4880'-6" REF.
¾" ℄ PENETRATION
DECON HOLD-UP TANK CELL
10 GA. S.S. FLOOR LINER PL ON CONC. FILL - BASE SLAB EL. 4880'-6" REF.
1'-0" WIDE OPENING IN CURB & DRAIN
L.P. GUTTER EL. 4880'-6"
GUTTER EL. 4881'-0"
GUTTER EL. 4882'-7"
PEDESTAL TYP.
TOP OF FILL EL. 4881'-0"
SLOPE
DRAIN EL. 4880'-6" REF.
TOP OF FILL EL. 4882'-7"
TOP OF FILL EL. 4882'-3"
1'-0" CURB
TOP OF FILL @ CURB EL. 4882'-6"
END OF CURB REF.
TYP. FLOOR & WALL INTERSECTION
MANIPULATOR PARKING / MAINTENANCE
10 GA. S.S. FLR LINER PL ON CONC. FILL
BASE SLAB EL. 4880'-6" REF.
PLENUM @ FLOOR WELDED TO EMBEDDED L's - SEE DWG. H-305
COVE AROUND PLENUM
DECON COLLECTION TANK & PUMP CELLS
10 GA. S.S. FLOOR LINER PL ON CONC. FILL
BASE SLAB EL. 4882'-6" REF.
TOP OF DRAIN EL. 4882'-6" REF.
TOP OF FILL EL. 4882'-10"
CANT - SEE
PUMP PADS SEE NOTE 7, SHEET S-237
MATCH LINE FOR CONTINUATION @ 2ND LEVEL SLAB - SEE DWG. S-239
TOP OF FILL EL. 4883'-0"
6" CURB @ EL. 4883'-6"
FLOOR PLAN NO. 2 - 3RD LEVEL SLAB
SCALE: 1/8" = 1'-0"
℄ YES, NCC-105 (CO-ORD. LINE)
DWG NO. S-237
THIS DWG.
DWG. NO. S-239
MATCH LINE
KEY PLAN
SCALE: NONE
½" ℄ x 3" LG. HILTI-KWIK BOLT S.S. (TIGHTEN NUT & CUT OFF BOLT @ S.S. LINER)
S.S. LINER
½" ℄ HOLE THRU S.S. LINER & INTO CONCRETE 2½" DEEP (REAM OUT HOLE @ S.S. LINER)
TYP. 12 PLACES
DETAIL 8-17
NO SCALE
NOTES
1. FOR GENERAL NOTES, See DWG. S-237.
2. FOR BASE SLAB DIMENSIONS, PEDESTAL DIMENSIONS & LOCATIONS, & PENETRATION LOCATIONS, SEE DWGS. C-226 & C-227.
3. FOR WALL LOCATIONS & DIMENSIONS, SEE DWGS. C-242 & C-243.
4. WORK THIS DRAWING WITH DWGS. S-237, S-239, S-240, S-241, C-204, C-205, C-207, C-208, C-210.
REVISED APPROVED FOR CONSTRUCTION
ALLIED CHEMICAL CORPORATION
IDAHO CHEMICAL PROGRAMS - OPERATIONS OFFICE
IDAHO FALLS, IDAHO
THIS DOCUMENT IS RELEASED ... 12-27-77
AND SUBSEQUENTLY CONTROLLED IN ACCORDANCE WITH ACC STANDARD PRACTICES
REVISIONS
5 2-15-78 REVISED PER DCN AB-010
4 12-6-77 REVISED PER DCN 735-1
3 4-6-78 REVISED PER DCN-387-1
CPP AREA
BLDG. NO. 659
STAINLESS STEEL FLOOR LINER PLATE INSTALLATION
FLOOR PLAN NO. 2
CALCINING AREA
NEW WASTE CALCINING FACILITY
IN-PLANT CODE NCC
DRAWN R.D. ROBERTSON 11-28-77
CHECKED G. ANDERSEN 11-28-77
APPROVED 12-13-77
APPROVED 12-13-77
APPROVED 12-28-77
ACC APPROVED 12-13-77
SCALE 1/8" = 1'-0" UNLESS NOTED
DATE 12-13-77
INDEX CODE NUMBER
2 C 0 0 G 5 9 G 0 2 B T 1 3 4 G 2 0
FLUOR
ENGINEERS AND CONSTRUCTORS, INC.
LOS ANGELES, CALIFORNIA
U.S. ENERGY R&D ADMINISTRATION
IDAHO OPERATIONS OFFICE
IDAHO FALLS, IDAHO
DWG. NO. 1495-CPP-659-S-238
REV. 3
FLUOR CONTRACT 453504
PKG. 17
DRAWING UNNUMBERED

FLOOR PLAN NO. 3 - 2ND LEVEL SLAB

KEY PLAN
SCALE: NONE

NOTES

1. FOR GENERAL NOTES, SEE DWG. S-237.
2. FOR BASE SLAB DIMENSIONS, PEDESTAL DIMENSIONS & LOCATIONS, & PENETRATION LOCATIONS, SEE DWG. C-281.
3. FOR WALL LOCATIONS & DIMENSIONS, SEE DWG. C-500.
4. WORK THIS DWG. WITH DWGS. S-238, S-240, S-241, S-242, C-204, C-205, C-207, C-208, C-210, C-284, & C-290.
5. 1/2" FLOOR LINER PLATE SHALL BE INSTALLED OVER CONC. FILL IN ACCORDANCE WITH DETAILS SHOWN ON DWG. S-242.

REVISED APPROVED FOR CONSTRUCTION

ALLIED CHEMICAL CORPORATION
IDAHO CHEMICAL PROGRAMS - OPERATIONS OFFICE
IDAHO FALLS, IDAHO

THIS DOCUMENT IS RELEASED 12-14-77 AND SUBSEQUENTLY CONTROLLED IN ACCORDANCE WITH ACC STANDARD PRACTICES.

NO	DATE	DESCRIPTION
2	1-9-78	REV. PER AB 010 LOCR 345
1	5-1-78	REVISED PER DCN 405-1

REVISIONS

CPP AREA — BLDG. NO. 659
STAINLESS STEEL FLOOR LINER PLATE INSTALLATION
FLOOR PLAN NO. 3
DECON AREA
NEW WASTE CALCINING FACILITY

IN-PLANT CODE: NCD

	BY	DATE
DRAWN	HARDENBROOK	11-28-77
CHECKED	G. POTOSKI	11-28-77
APPROVED	[illegible]	11-28-77
APPROVED	[illegible]	11-28-77
APPROVED	W. [illegible]	11-28-77
APPROVED	[illegible]	11-28-77
ACC APPROVED	[illegible]	12-13-77

SCALE: 1/4" = 1'0" & NOTED
DATE: 12-13-77

FLUOR ENGINEERS AND CONSTRUCTORS, INC. LOS ANGELES, CALIFORNIA
FOR
U.S. ENERGY R&D ADMINISTRATION
IDAHO OPERATIONS OFFICE
IDAHO FALLS, IDAHO

0 1'0" 5'0" 10'0"
SCALE: 1/4" = 1'0"

INDEX CODE NUMBER

AREA	DWG TYPE	CL	ORIG	SERIAL
200	0659	60	287	134621

DWG. NO. 1495-CPP-659-S-239 REV. 2

PKG. 17

134621

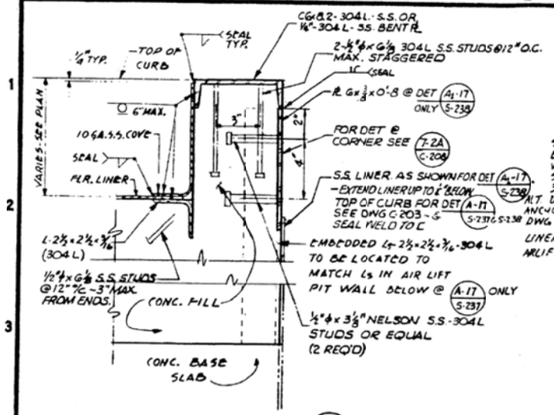

SECTION A-17 S-237 & S-238
AS SHOWN & NOTED

SECTION A1-17 S-238
AS SHOWN & NOTED

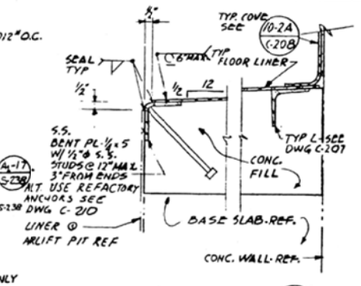

SECTION D-17 S-237

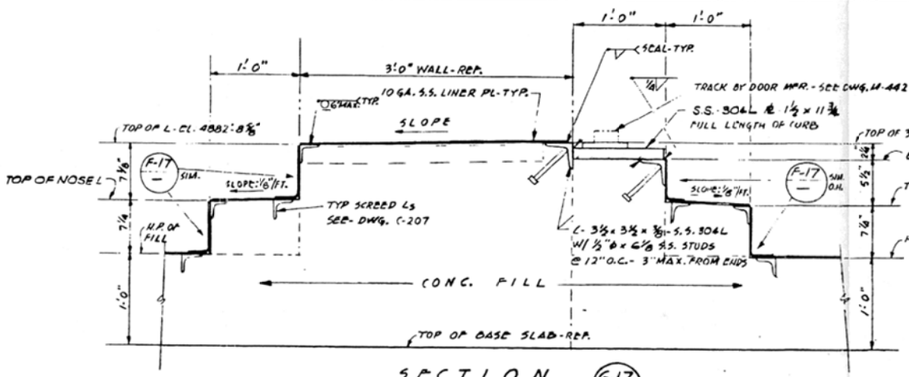

SECTION G-17 S-238

0 1" 3" 6" 9" 1'-0"
SCALE 1½"=1'-0"

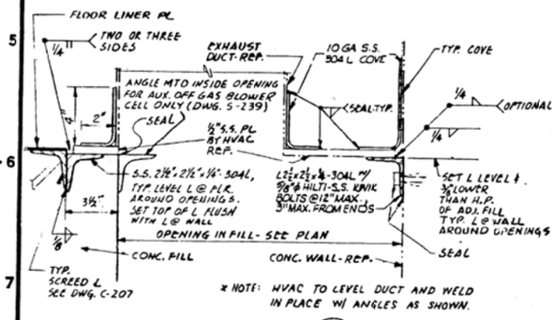

SECTION D-17 S-237

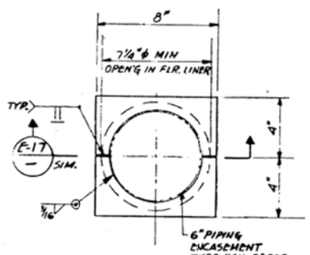

PLAN DETAIL 1-17 S-237

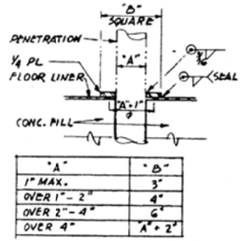

"A"	"B"
1" MAX.	3"
OVER 1" - 2"	4"
OVER 2" - 4"	6"
OVER 4"	A" + 2"

SECTION E-17 S-237

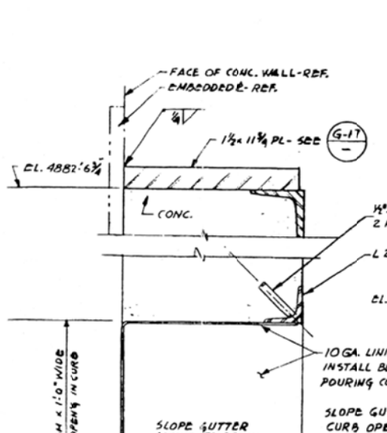

SECTION H-17 S-238

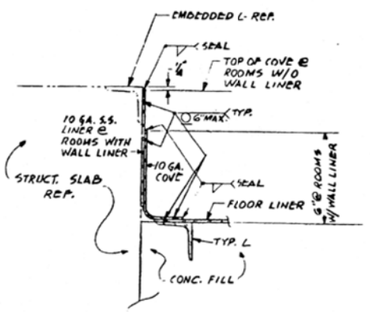

SECTION C-17 S-237

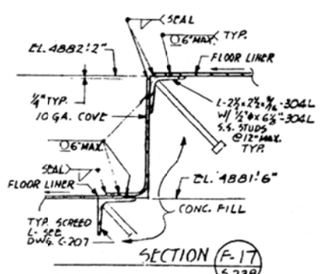

SECTION F-17 S-238

0 1" 3" 6" 9" 1'-0"
SCALE 3"=1'-0"

APPROVED FOR CONSTRUCTION

ALLIED CHEMICAL CORPORATION
IDAHO CHEMICAL PROGRAMS - OPERATIONS OFFICE
IDAHO FALLS, IDAHO

THIS DOCUMENT IS RELEASED 12-14-77
AND SUBSEQUENTLY CONTROLLED IN ACCORDANCE WITH ACC STANDARD PRACTICES.

NOTE:
WORK THIS DRAWING WITH DWGS. S-237, S-238, & S-239.

NO.	DATE	DESCRIPTION	BY	APPD
2	12-9-77	REV PER AB DIO & DCR 345		
1	12-13-77	REVISED PER DWG 4881 REV 21		

REVISIONS

CPP AREA	BLDG. NO. 659	
STAINLESS STEEL FLOOR LINER PLATE INSTALLATION SECTIONS AND DETAILS CALCINING AND DECON AREAS NEW WASTE CALCINING FACILITY		PKG 17
FLUOR ENGINEERS AND CONSTRUCTORS, INC. LOS ANGELES, CALIFORNIA		
U.S. ENERGY R&D ADMINISTRATION IDAHO OPERATIONS OFFICE IDAHO FALLS, IDAHO		
DWG. NO. 1495-CPP-659-S-240	REV. 2	

		BY	DATE
	IN PLANT CODE	NJCC	
DRAWN	HARDY-HEDDEN		11-28-77
CHECKED	G. ROBERTS		11-28-77
APPROVED			11-28-77
APPROVED			11-28-77
APPROVED			11-28-77
ACC APPROVED			12-13-77
SCALE	3"=1'-0" & NOTED		
DATE	12-13-77		

INDEX CODE NUMBER
200 0659 60 287 134 G22

FLUOR CONTRACT 453504

DRAWING NUMBER

1346638

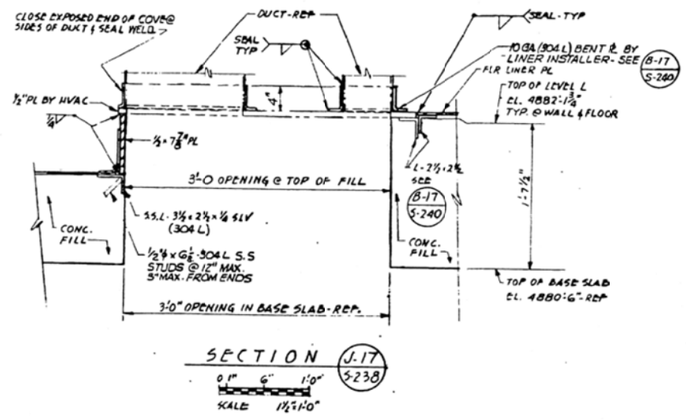

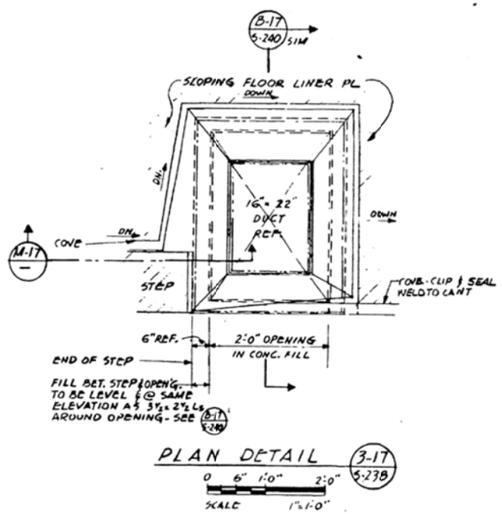

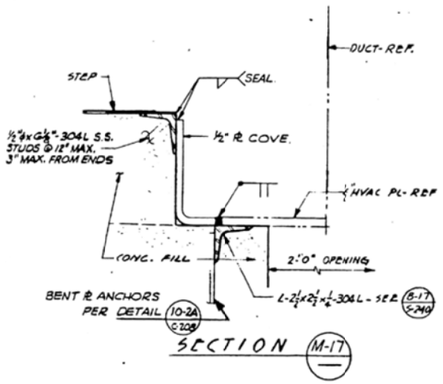

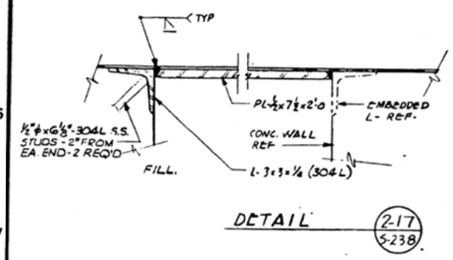

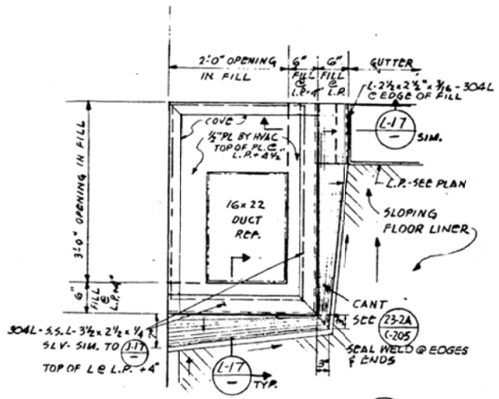

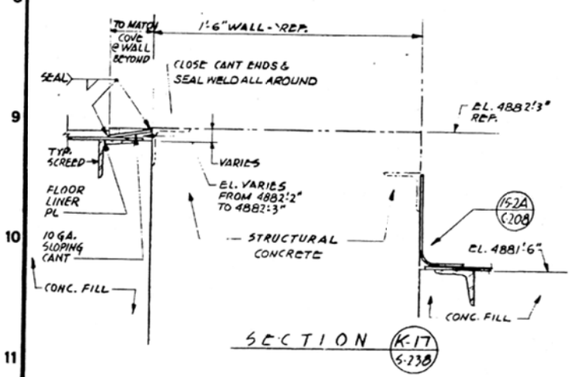

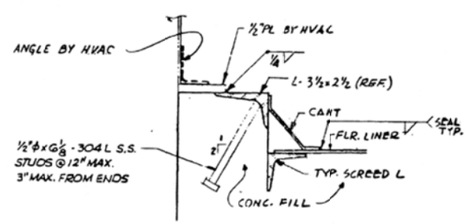

0 1" 3" 6" 1'0"
SCALE 3"=1'0"

APPROVED FOR CONSTRUCTION

ALLIED CHEMICAL CORPORATION
IDAHO CHEMICAL PROGRAMS - OPERATIONS OFFICE
IDAHO FALLS, IDAHO

THIS DOCUMENT IS RELEASED 12-14-77 AND SUBSEQUENTLY CONTROLLED IN ACCORDANCE WITH ACC STANDARD PRACTICES.

NOTE:
WORK THIS DWG. WITH DWGS. S-238, S-239, S-140, & C-205.

NO.	DATE	REVISIONS DESCRIPTION	LOC APPD

CPP AREA BLDG. NO. 659
STAINLESS STEEL FLOOR LINER PLATE INSTALLATION
SECTIONS AND DETAILS
DECON AND CALCINING AREAS
NEW WASTE CALCINING FACILITY

IN PLANT CODE NCC	BY	DATE
DRAWN	HARDENBROOK	11-28-77
CHECKED	G. POTOSKY	11-28-77
APPROVED		11-28-77
APPROVED		11-28-77
APPROVED		12-12-77
APPROVED		12-13-77
ACC APPROVED		12-13-77

SCALE 3"=1'-0" UNLESS NOTED
DATE 12-13-77

INDEX CODE NUMBER: 200 | 0659 | 60 | 28T | 13 | 4623

FLUOR ENGINEERS AND CONSTRUCTORS, INC. LOS ANGELES, CALIFORNIA

U.S. ENERGY R&D ADMINISTRATION
IDAHO OPERATIONS OFFICE
IDAHO FALLS, IDAHO

DWG. NO. 1495-CPP-659-S-241 REV 0

FLUOR CONTRACT 453504

PKG 17

13433

DRAWING NUMBER

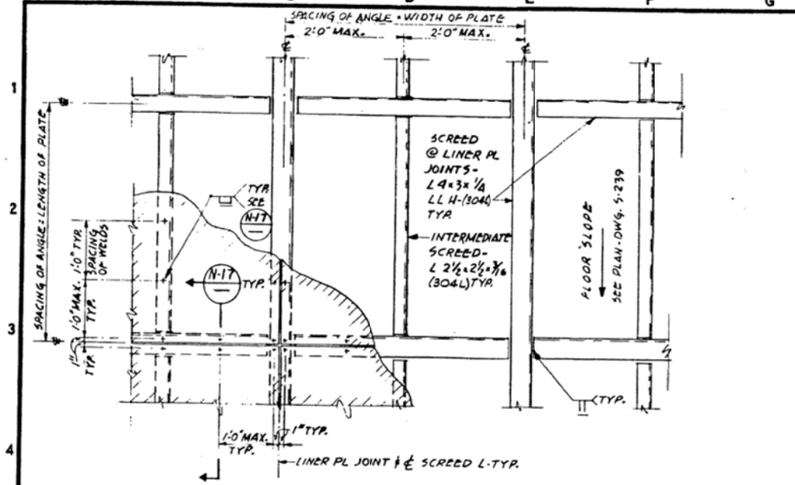

PLAN - TYP. LINER SCREED ARRANGEMENT - 1/4" & 1/2" LINER PLATE (S-17 / S-239)

SCALE : NONE

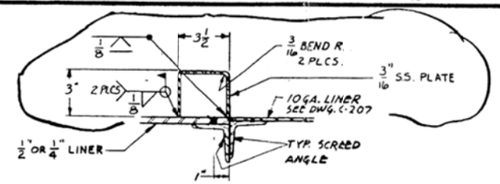

SECTION (R-17 / C-313)

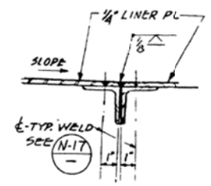

SECTION (S-17 / C-312)

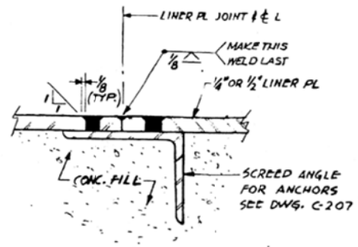

SECTION (N-17 / —)

SCALE: HALF SIZE

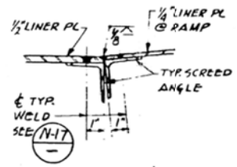

SECTION (T-17 / C-312)

NOTES

1. FOR GENERAL NOTES, SEE DWG. S-237.
2. WORK THIS DWG. WITH DWGS. S-239, C-207, C-290, C-312, C-313

APPROVED FOR CONSTRUCTION

ALLIED CHEMICAL CORPORATION
IDAHO CHEMICAL PROGRAMS - OPERATIONS OFFICE
IDAHO FALLS, IDAHO

THIS DOCUMENT IS RELEASED 12-14-77
AND SUBSEQUENTLY CONTROLLED IN ACCORDANCE WITH ACC STANDARD PRACTICES.

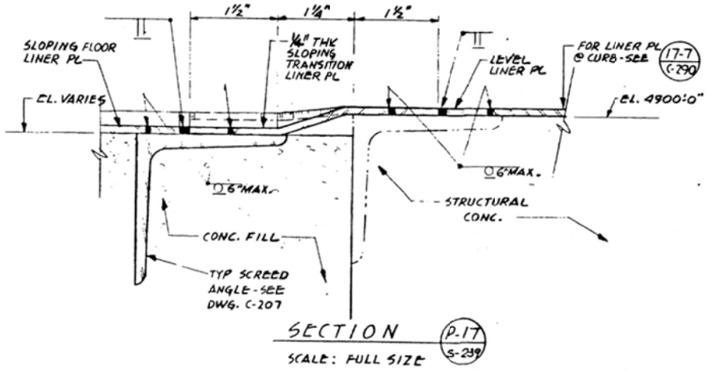

SECTION (P-17 / S-239)

SCALE: FULL SIZE

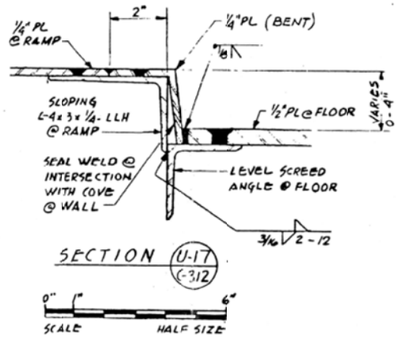

SECTION (U-17 / C-312)

SCALE HALF SIZE

SCALE 3" = 1'-0"

IN PLANT CODE	NCC	
	BY	DATE
DRAWN HARDENBROOK		11-28-77
CHECKED G.A. CROSBY		11-28-77
APPROVED		11-28-77
APPROVED		11-28-77
APPROVED		11-28-77
ACC APPROVED		12-13-77
SCALE 3" = 1'-0" & NOTED		
DATE 12-13-77		

INDEX CODE NUMBER: 200 | 0659 | G | 0287 | 134624

NO.	DATE	DESCRIPTION	LOG	APPROVED	CHECKED
1	12-10-84	SEE DCN #1 246226 (85-064)			

REVISIONS

CPP AREA — BLDG. NO. 659

STAINLESS STEEL FLOOR LINER PLATE INSTALLATION
SECTIONS AND DETAILS
CALCINING AND DECON AREAS
NEW WASTE CALCINING FACILITY

FLUOR
ENGINEERS AND CONSTRUCTORS, INC.
LOS ANGELES, CALIFORNIA

FOR
U.S. ENERGY R&D ADMINISTRATION
IDAHO OPERATIONS OFFICE
IDAHO FALLS, IDAHO

DWG. NO. 1495-CPP-659-S-242 — REV. 1

PK 17

DRAWING NUMBER

DRAWING NUMBER

DRAWING NUMBER

DRAWING NUMBER

FLUOR CONTRACT 4535DA

1 3HC9HE

EXIST. TANK VAULT

N

8" VENT CAST IN WALL – SEE DWG. U-5

NEW ACCESS TUNNEL & PUMP PIT

EXIST. LIQUID EVAP ROOM

⅝"ø x 10" ANCH. BOLTS ON 20" B.C.

EL. (-)27'-0" @ ROOM PERIMETER

IMBED PL ½"x1'-6"x16'-0" IN CEILING (SST)

NEW MONORAIL FOR DETAILS SEE DWG. 160897

2" FLOOR DRAIN SEE DET. 1/S-2

EL. (-)27'-0" @ ROOM PERIMETER

⅝"ø x 10" LG. M.P. W/6" PROJ. 4 EA. PUMP PAD

VES-WL-106

6" HIGH CONC. PUMP PADS.

L5"x5"x⅝"x7'-0" SEE SECT. C S-2

SEE DET. 1/S-2

EXISTING SEPARATION & CONDENSATION CELL

EXIST. PUMP PIT

REMOVE EXIST. PUMP PIT ACCESS MANHOLE

CAULK CONT.

SEE DET. 2/S-2

#8 CORNER BAR @12" % EF

SEAL WELD LINER TO PIPE

2" PIPE SLEEVE @ EL. (-)19'-5" SEE DET. 12/S-3

3" PIPE SLEEVE THRU ROOF SEE DET. 12/S-3

3½" PIPE SLEEVE @ EL. (-)13'-0½" SEE DET. 12/S-3

7'-0" x 3'-6" DOORWAY

3" SCH. 80S PIPE IMBEDDED IN WALL @ EL. (-)2'-6⅜"

NEW EVAP CELL

SLOPE

11 GA. SST LINER-EXTEND 1'-0" UP WALL (TYPICAL)

#8 CORNER BAR @6" % EF

TYPICAL IMBEDDED L FOR SST. LINER – SEE DET. 10/S-3

SEAL WELL LINER TO PIPE

CAULK CONT.

TEMPORARY SHORING

EXIST. CONC. DUCT ABOVE

EXIST. FOOTING

NOTES:

1. FOR STRUCTURAL SUPPORTS (& ANCH. BOLTS) FOR VESSELS SEE DWG. S-4
2. FOR IMBEDDED ELECTRICAL ITEMS REFER TO ELECT. DWGS.

PARTIAL PLAN
SCALE: ¼"=1'-0"

11 GA. SST LINER

SEAL WELL

PERF COVER PL, 11 GA SST W/

EL. (-)27'-1"

PL 6"x⅜"x 0'-6" (SST)

6" SCH. 40 SST DRAIN

6" SCH. 10S PIPE (ENCASEM'T)

DRAIN DETAIL (1/A-P/12)
SCALE: 3"=1'-0"

EL. 10'-0"

EXIST. VALVE BOXES & VALVE STEM EXTENSIONS SEE DWG U-3.

EXIST. 36" MANHOLE TO BE REMOVED & REPLACED AS SHOWN IN SECT C S-2

EXIST. LIQUID EVAP ROOM

SEE DET. 8/S-2

EL. (-)27'-0" @ ROOM PERIMETER

SST LINER

EL. (-)27'-1" T.O.D.

1'-0"

1'-2"

#4 @12" % E.W.

2" F.D.

2" DRAIN SEE DWG. G04-P-10

PUMP PAD SEE DET. 11/S-3

SEE DET. 7/S-2 (TYPICAL)

#6 @12" % E.W.

#6 @ 10" % T.G.B.

#6 @ 12" % T.G.B.

PL 6"x3"x6'-0" SST IMBEDDED IN CEILING W/ ¾" DIA. ANCHORS @ 1'-0" %

16'-6"

CAULK CONT.

PAINT "FLOOR LOADING 1500 PSF" W/4" HIGH LETTERS W/ BLACK PAINT ON WALL

EL. (-) 17'-10"

3" PIPE SLEEVE

#8 @ 12" % VERT. E.F

#6 @ 12" % HORIZ. E.F

7'-0"

8'-0"

2'-0"

4" WATERSTOP

4"x6" KEYWAY

EL. (-) 33'-4"

SECTION (4/S-2)
SCALE: ¼"=1'-0"

EXIST. SEPARATION & CONDENSATION RM.

SEE DET. 4/S-2

SEE DET. 5/S-2

EL. 10'-0"

3'-0"

16'-0"

2'-0"

14'-0"

#8 @ 12" % VERT. E.F

#8 @ 12" % HORIZ. E.F

6"ø PENET. THRU DUCT & WALL – SEE DWG 604-S-6

EXIST. CONC. DUCT

37'-0"

13'-0"

#6 @ 12" % VERT. E.F

#8 @ 10" % HORIZ. E.F

SST L2"x2"x⅜" W/ ½"ø x 4" ANCHORS @ 3'-0" %

3'-0"

10'-0"

#6 @ 12" % VERT. E.F

#8 @ 6" % HORIZ. E.F

#4 @ 12" % E.W.

7'-0"

EL. (-)27'-1" T.O.D.

4'-1"

2"

2'-0"

2" F.D.

5'-0"

4" WATERSTOP

4"x6" KEYWAY

2" DRAIN SEE DWG. G04-P-10

SEE DET. 7/S-2 (TYPICAL)

SECTION (B/S-2)
SCALE: ¼"=1'-0"

INFORMATION ONLY

RCRA CONTROLLED DRAWING

NOTES:

1. FOR STRUCTURAL SUPPORTS (& ANCH. BOLTS) FOR VESSELS SEE DWG. S-4
2. FOR IMBEDDED ELECTRICAL ITEMS REFER TO ELECT. DWGS.

9'-0"

L5"x5"x⅝" OPP SIDE

EXIST. FOOTING APPROX. 1'-6" FROM WALL

TEMPORARY SHORING

SECTION (E/S-2)
SCALE: ¼"=1'-0"

EXIST. LIQUID EVAP. ROOM

EXIST. SEPARATION & CONDENSATION ROOM

CPP G04

CPP G05

SPARE PEW EVAPORATOR CELL

KEY PLAN SCALE: 1"=30'

CONTROLLED DOCUMENT CLASS I

CONTROLLED DOCUMENT CLASS I

NO.	DATE	REVISIONS	APPD'D ARC	APPD'D	APPD'D ARC	APPD'D ARC
5	6-24-94	Revised per DCN #455753-A8205	AW			
4	6-15-94	PER DCN #455753-A8189 GS	AW			
3	1-18-82	SEE DCN NO. 3	SWM	WPT	WPT	
2	9-19-75	AS BUILT	CEM	EWN	EWN	
1	9-9-74	ADD SUMP-ADD SHIELD BLANK PIT, REVISED	RCW	RCW		

	BY	DATE
DESIGNED	JDM	7-24-73
DRAWN	L.C.L.	7-24-73
CHECKED	J.K.S.	7-24-73
APPROVED	R.C.W.	7-24-73

APPROVALS

ORGAN.	BY	DATE
ARC		
	W.C.A.	9/11/74
ASC		
AEC		
AEC R&D		
AEC E&C		

AEROJET NUCLEAR COMPANY
INCORPORATED
IDAHO FALLS, IDAHO
FOR
U. S. ATOMIC ENERGY COMMISSION
IDAHO OPERATIONS OFFICE
IDAHO FALLS, IDAHO

CPP BLDG. G04

SPARE PROCESS EQUIPMENT
WASTE (PEW) EVAPORATOR SYS.
PLAN & SECTIONS

INDEX CODE NUMBER
AREA SYSTEM CL. | ORIG. | SERIAL
200 | 0604 | 2400 | 155069

SCALE: 1" = 1'-0"
DATE ISSUED: 11-12-73

DWG. NO. 1375-CPP-G04-S-4 REV. 5

CPP 605

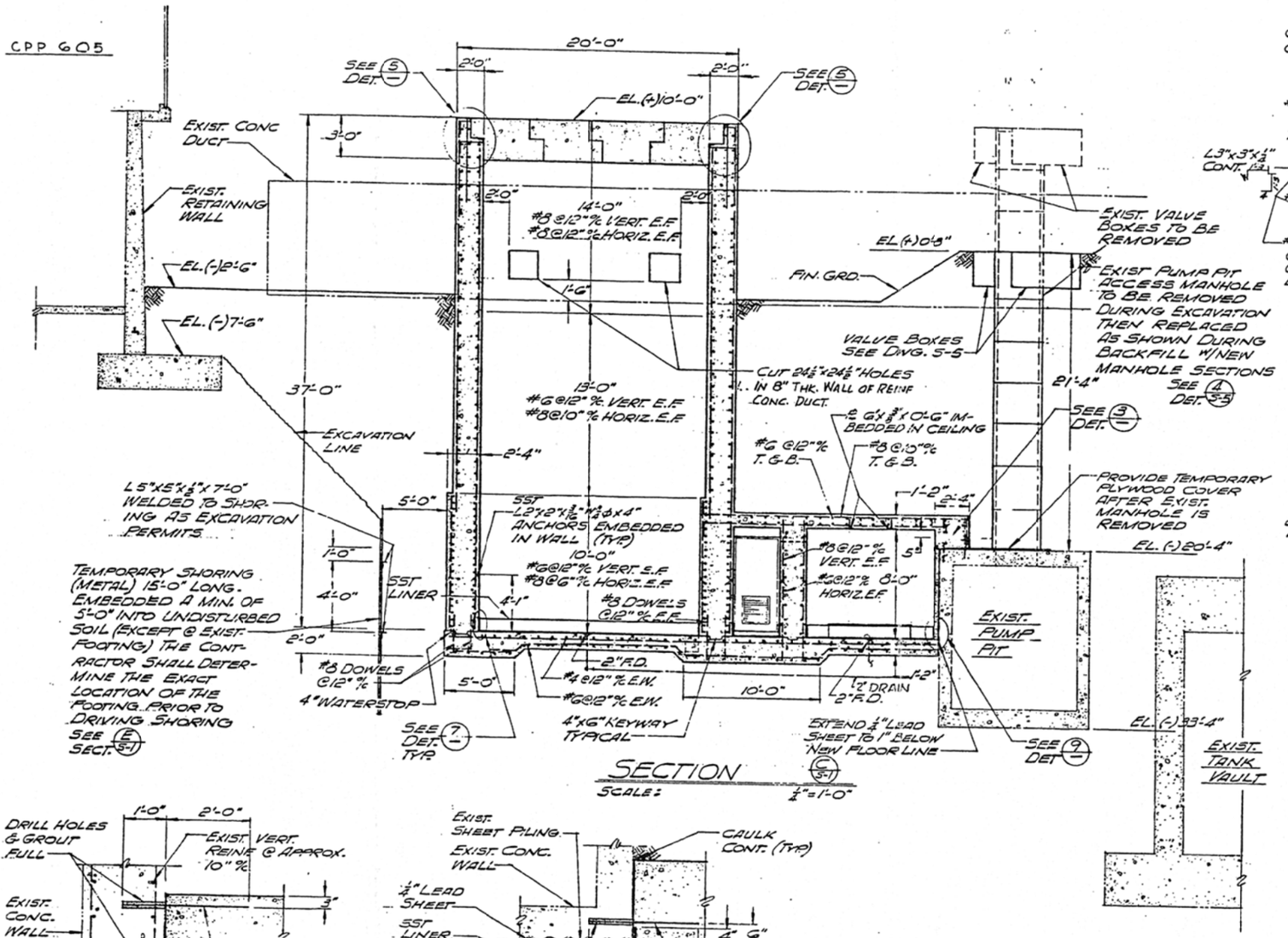

SECTION (C 5-1)
SCALE: ¼"=1'-0"

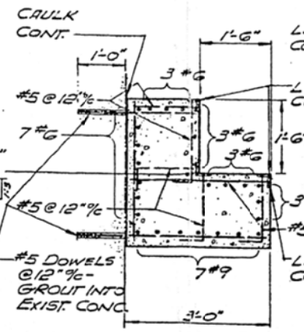

DETAIL (4 5-1)
SCALE: ¾"=1'-0"

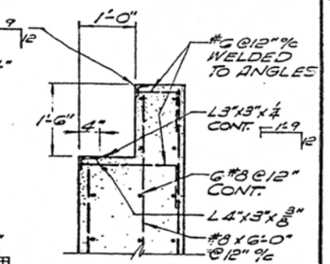

DETAIL (5 5-1) (5 —)
SCALE: ¾"=1'-0"

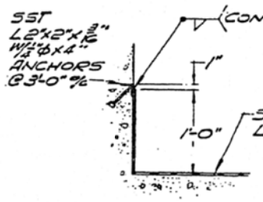

DET. (7 —) (7 3-1)
NO SCALE

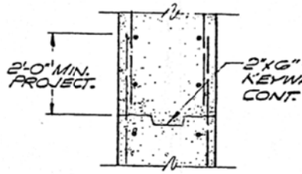

TYP. COLD JOINT DETAIL
NO SCALE

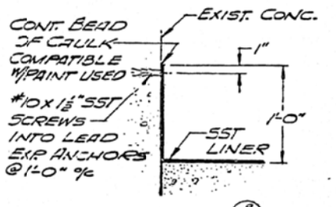

DET. (6 5-1)
NO SCALE

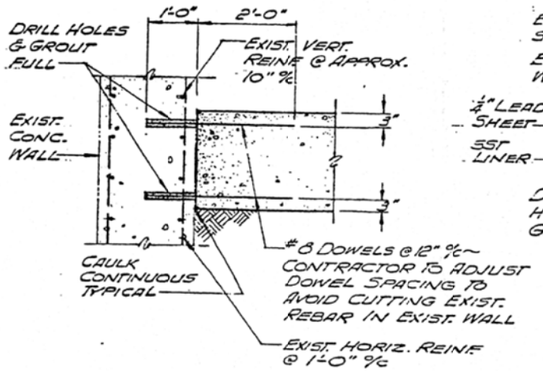

DETAIL (1 5-1)
NO SCALE

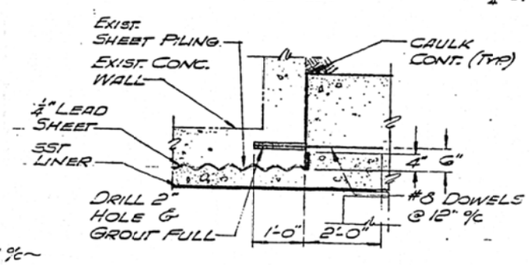

PLAN

DETAIL (2 5-1)
SCALE: ¾"=1'-0"

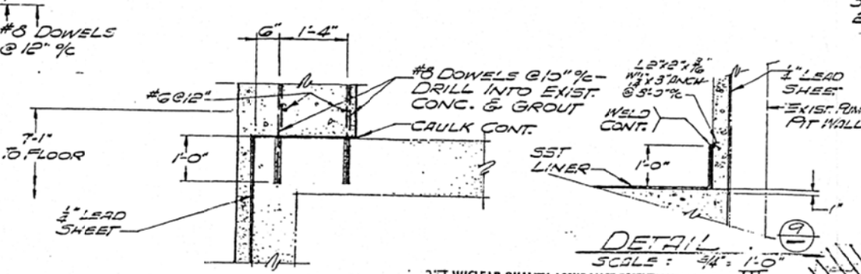

DETAIL (9 —)
SCALE: ¾"=1'-0"

DETAIL (3 —)
SCALE: ¾"=1'-0"

NOTE:

1. EL. 0'-0" = 4917' N.R.T.S. DATUM
2. ALL INTERIOR WALLS OF NEW ACCESS TUNNEL, PUMP PIT & EVAP. CELL TO BE PAINTED W/ DECONTAMINABLE PAINT. EXISTING WALLS MUST BE CLEANED PRIOR TO PAINTING.
3. MIN. COVER FOR REINF.: 3" FOR CONC. IN CONTACT W/ EARTH; 2" FOR SLABS & WALLS NOT IN CONTACT W/ EARTH.

INFORMATION ONLY

AEROJET NUCLEAR QUALITY ASSURANCE ESSENTIALITY LEVEL III

CONTROLLED DOCUMENT CLASS 1

NO.	DATE	REVISIONS	BY	DATE	APPVD. AEC	APPVD.	APPVD.	APPVD. AEC	APPVD. AEC	APPVD. AEC
2	9-17-73	AS BUILT	C.E.M.	9/17/73						
1	6/6/74	ADD CAUK TO FACE OF PUMP PIT WALL PER DCN 2	R.C.D.	6/11/74						

	BY	DATE
DESIGNED	J.D.H.	12-6-72
DRAWN	L.C.L.	12-6-72
CHECKED	J.K.S.	12-7-72
APPROVED	D.R.H.	12-11-72

APPROVALS

ORIGIN.	BY	DATE
A/E		
R.C.D.		12-11-72
AEC		
AEC		
AEC H&S		
AEC E&C		

AEROJET NUCLEAR COMPANY
INCORPORATED
IDAHO FALLS, IDAHO
FOR
U.S. ATOMIC ENERGY COMMISSION
IDAHO OPERATIONS OFFICE
IDAHO FALLS, IDAHO

CPP BLDG. 604

SPARE PROCESS EQUIPMENT

WASTE (PSW) EVAPORATOR SYS.

SECTIONS & DETAILS

INDEX CODE NUMBER					
AREA	SYST/TYPE	CL	DRTG.	SERIAL	
200	0604	6	200	155070	

SCALE: AS NOTED
DATE ISSUED: 11-12-73

DWG. NO. 1575-CPP-604-S-2 REV. 2

PROJECT NO.

ZONE	REV	REVISIONS DESCRIPTION			APPROVED
	4	PER DCN #155753-AB 49 ED for 4/31/94	CMC SEE 4/94		
	5	PER DCN 155753-AP138 SCB 5/9/94	JW 5/24/94	btw 5-25-94	
	6	REVISED PER DCN #155753-AB207	MW 6-21-94	GS 6-28-94	DSA 6-29-94

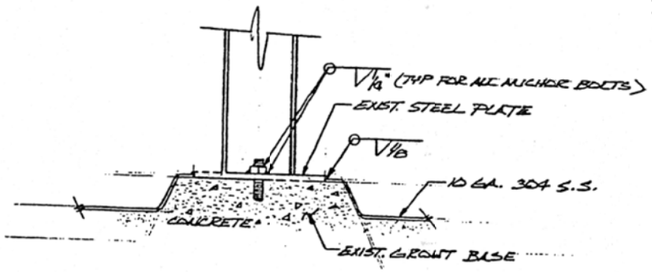

TYPICAL CONNECTION BASE SIZE VARIES

NO SCALE:

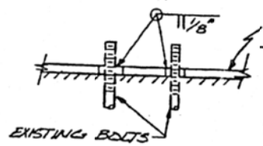

TYPICAL PUMP BASE

NO SCALE:

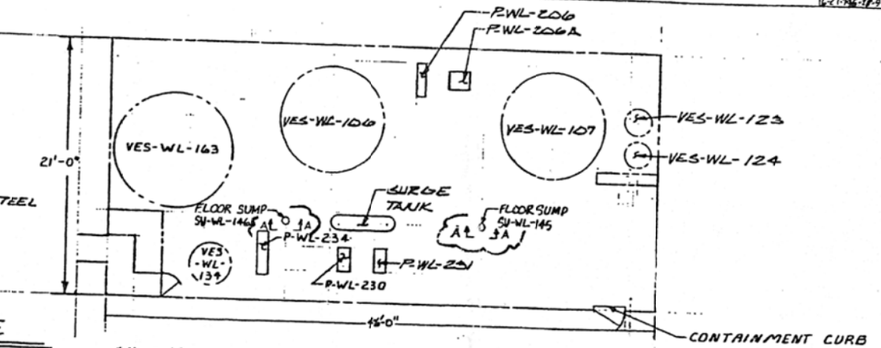

CONDENSATION CELL ROOM PLAN

NO SCALE:

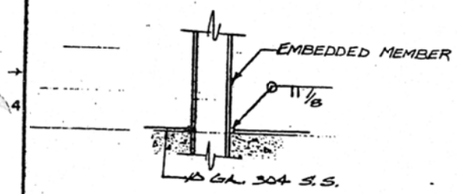

TYPICAL FLOOR PIPE CONNECTION

NO SCALE:

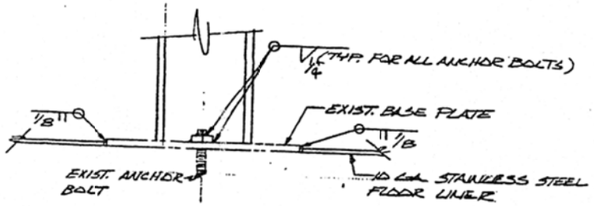

TYPICAL CONNECTION BASE PLATE

NO SCALE:

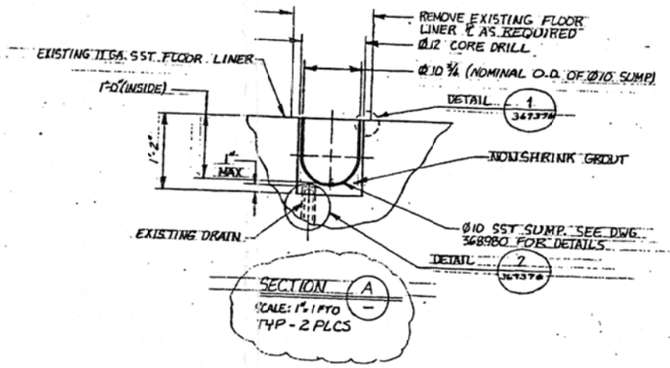

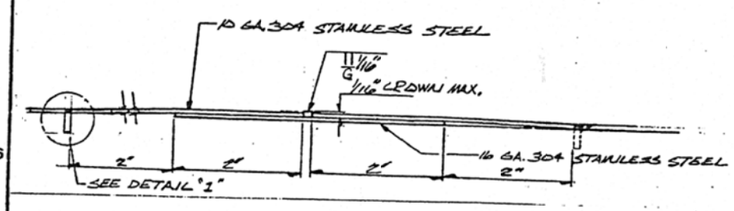

TYPICAL FLOOR JOINT

NO SCALE:

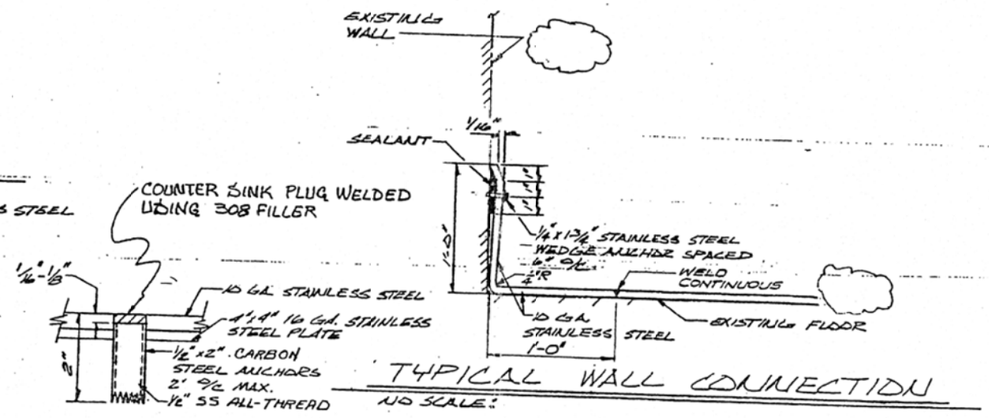

TYPICAL WALL CONNECTION

NO SCALE:

DETAIL 1

NO SCALE:

INFORMATION ONLY

RCRA CONTROLLED DRAWING

CONTROLLED DOCUMENT

ACC QUALITY ASSURANCE ESSENTIALITY LEVEL: C

DESIGN SUPR.	JEL	1/29/79
DESIGN	C.J. KEISTER	1/29/79
CHECKED	SAC	1/29/79
DRAWN	MARBLE	DATE 7-6-78
SCALE	NOTED	RELEASE DATE JANUARY 29, 1979

EGEG Idaho, Inc.

FOR U. S. ENERGY RESEARCH & DEVELOPMENT ADMINISTRATION

IDAHO OPERATIONS OFFICE IDAHO FALLS, IDAHO

TITLE CPP-604

LPP-604 CONDENSATE CELL FLOOR LINER

PLAN & CONNECTIONS

WL

DWG. SIZE	INDEX CODE NUMBER AREA	DWG. TYPE	CL	DWG.	DRAWING NUMBER	REV
D	200	0604	60	220	158768	6

SHEET

PROJECT NO.

M-1

REVISIONS				
ZONE	REV.	DESCRIPTION	DATE	APPROVED
	1	AS BUILT	11/18/85	
	2	INACTV. PER DCN# 111161-21	1-10-89	
	3	ACTIVATED PER DCN# 155753-AB 52	5-3-94	
	4	REVISED PER DCN# 155753-AB 212	6-23-94	6-29-94

16 GA. TYPE 304 S.S. CORNER PIECE (TYP.)

TYP. 6" TYP.

16 GA. TYPE 304 S.S. LINING (TYP.)

RED HEAD WEDGE ANCHOR = WW-1270 @ 4'-0" MAX. O.C., EMBED 5½" (TYP.)

½" x 1½" SS BACKING BAR (TYP.)

DETAIL 1 N.T.S.

WEDGE ANCHOR (TYP.)

16 GA. S.S. LINING (TYP.)

6" MIN. 6" MIN.

TYP.

½" x 1½" S.S. BACKING BAR (TYP.)

DETAIL 2 N.T.S.

EXISTING C.S.L

TYP.

16 GA. S.S. LINING

BOTTOM OF HATCH COVER

6" MIN.

TYP.

½" x 1½" S.S. BACKING BAR (TYP.)

16 GA. S.S. LINING

WEDGE ANCHOR (TYP.)

DETAIL 3 N.T.S.

RED HEAD WEDGE ANCHOR = WW-1270 @ 4'-0" MAX. O.C. (HORIZ.) EMBED 5½" (TYP.)

16 GA. TYPE 304 S.S. SHT. METAL LINER (TYP.)

NOTCH SHT. METAL AS REQ'D TO MISS ANCHOR HEAD (TYP.) SEE NOTE 3

2'-0" MAX. (TYP.)

TYP.

½" x 1½" TYPE 304 S.S. BACKING BAR (TYP.)

DETAIL 4 N.T.S.

EXIST. HATCH COVER

EXISTING C.S.L (TYP.)

TYP.

½" MIN. FIELD FIT (4 PLCS)

16 GA. TYPE 304 SHT. METAL LINER

DETAIL 5 N.T.S.

FIT LINING TO BARS & SEAL WELD (TYP.)

½" x 1½" TYPE 304 S.S. BACKING BAR (TYP.)

TYP. ¼

½" x 1½" TYPE 304 S.S. BAR INSTALLED VERTICALLY AS REQ'D FOR REPLACEMENT OF PIPE & CONDUIT SUPPORTS AND AT VERT. LINING SEAMS

WEDGE ANCHORS (TYP.)

PIPE & CONDUIT SUPPORT BAR DETAIL N.T.S.

N

NEW 16 GA. TYPE 304 S.S. LINING

15'-8"

2'-0"±

14'-0"

SEE DETAIL 1

PLAN

SCALE: 1/4" = 1'-0"

2'-0"

8'-6"±

SEE DETAIL 3

SEE DETAIL 2

34'-6"±

12"± EXIST. LINER

½" x 1½" S.S. BAR HORIZONTALLY PLACED FROM TOP TO BOTTOM OF CELL

½" x 1½" S.S. VERT. BAR FOR SHT. SPLICES, CORNER & SUPPORTS (TYP.)

2'-0" MAX. O.C.

SEE DETAIL 4

EXIST. S.S. LINER

SECTION A SCALE: ¼" = 1'-0"

SEE DETAIL 3

NEW 16 GA. TYPE 304 S.S. LINING

4"±

LAP NEW LINER OVER EXISTING LINER AND SEAL WELD (TYP.)

SEAL WELD LINING TO EXIST. DOOR JAMB

EXIST. S.S. LINER

SECTION B SCALE: ¼" = 1'-0"

NOTES:

1. SCOPE - ADD S.S. LINING TO WALLS AND BOTTOMS OF HATCH COVERS SUPPLEMENTING S.S. LINING NOW ON FLOOR AND APPROX. 12" UP THE WALLS. SEAL WELD ALL JOINTS
2. SHAPE 16 GA. S.S. LINING AROUND ½" STRUCTURAL ANCHOR PLATES AND SEAL WELD TO THEM. ADD SHIMS BETWEEN LINING AND ⅜" THK. ANCHOR PLATES AS REQUIRED - SEAL WELD TO SLEEVES @ PIPE PENETRATIONS
3.

INFORMATION ONLY

4. WELDING OF 16 GA. TYPE 304 S.S. LINER: ATTACH SHEETS TO BACKING BARS OR TO EACH OTHER WITH ½" TACK WELDS, USING PROCEDURE 32.0, 33.0 OR 36.1. COMPLETE THE SEAL WELDING WITH 12" MAX. SKIP WELDS USING PROCEDURE 36.1. WHEN WELDING SHEETS TO EACH OTHER, USE A MIN. OVERLAP OF ¼".
5. QUALITY CONTROL - REFERENCE SPECS., WI-05A1, "FOR STRUCTURES".

RCRA CONTROLLED DRAWING

APPROVED FOR CONSTRUCTION

E.A.# 98870 FOR DRAWING INDEX SEE DRAWING NO. 162534

CONTROLLED CLASS 1 DOCUMENT

EG&G
A/E CONTRACT NO. 1570
FOR
U.S. DEPARTMENT OF ENERGY
IDAHO OPERATIONS OFFICE
IDAHO FALLS, IDAHO

		CPP BLDG-604
		CPP-604 WL-129
		EVAPORATOR UPGRADE
		CELL #2
		CELL LINING PLAN, SECTIONS AND DETAILS
C.A. Roberts	11-10-82	WL
DESIGN SUPV. W.K. Morgan	12-9-82	
DESIGN J.S. Kilburn	12-09-82	
CHECKED JPB	12-9-82	
DRAWN S. KUTTERER	DATE 12-82	
PROJECT NO.		SIZE D; INDEX CODE NUMBER AREA 200 DWG. TYPE 604 CL 60 DWG 220; DRAWING NO. 162748; REV. 4
SUBCONTRACT NO.		
ISSUED FOR CONSTRUCTION 12-10-82		SCALE 1/4"=1'-0" UNLESS NOTED; SPEC. CODE ISSUE; A/E SHEET NO. S-6

QUALITY LEVEL

115667

$ THINK VALUE ENGINEERING $

REVISIONS			
REV	DESCRIPTION	DATE	APPROVED
2	REVISED PER DCN #167238–AB43 MAW	7-11-96	LWG
		7-11-96	MDS

12

N

CPP-659

SEE NOTE 2

COVER EXPOSED CONCRETE W/ 11 GA SST LINER AND SEAL WELD ALL JOINTS. SEE DETAIL 8 / 176267

8" CMU WALL

SEE NOTE 2

3/4"

FND LINE OF CPP-659

8" WALL

CONC WALL ANCHORED TO BLOCK WALL. SEE DETAIL I / 176266 (TYP 2 PLCS)

8" CONCRETE RETAINING WALL BUILT UNDER CORNER OF FLOOR SLAB

SST GRATING PER SPEC

12" SS SLEEVE

4'-0" OPENING

1'-6"

19'-0"

20'-0"

INTERMEDIATE EMBEDDED ANGLES

6 1/2"

2'-8"

3'-7"

3'-9"

3'-7"

2'-4"

7'-4"

5'-5"

1'-6"

2'-6"

CONC PIER FOR TANK SUPPORT 4 PLACES

1'-8 1/2"

1'-9 1/2"

1'-8 1/2"

6 1/2" TYP

FLOOR SLAB, SEE PLAN ON DWG 176264

SUMP

2" X 1/8" SS BACKER PLATE FOR WELD JOINT. TYPICAL AT EACH CORNER OF BUILDING AND SUPPORT COLUMN AND AT ALL JOINTS IN CORNER LINE PLATE.

44'-5 1/2" (REF)

9% SLOPE DOWN

RAMP

EMBEDDED ANGLE TYP AT INTERIOR FOUNDATION AND SUMP CORNERS. SEE DETAIL 7 / 176267

5'-0"

12" SS SLEEVE

1'-0" WALL

8" WALL

8" WALL

1'-0" WALL

4'-0" OPENING

1'-6"

13'-0"

15'-0"

REINFORCED CONC SLAB

12'-4"

18'-0"

42'-7"

43'-7"

20'-0" (REF)

8" RAMP WALL (REF)

H 176268 · G 176265 · R 176267 · B 176265 · E 176267 · C 176265 · A 176265 · F 176266 · D 176265

NOTES:

1. FLOOR SLAB, CONCRETE PIERS, SUMP AND WALLS UP TO EL 4917'-0" IS LINED WITH 11 GAUGE STAINLESS STEEL SHEET. ALL JOINTS & EDGES ARE WELDED TO FORM LEAK-TIGHT SEALS. LINER NOT SHOWN ON FOUNDATION PLAN FOR CLARITY. SEE DWG 176267 FOR TYPICAL LINER DETAILS AND ADDITIONAL NOTES.
2. EMBEDDED ANGLE AT LINER JOINTS. SPACING DIMENSIONS DETERMINED BY LENGTH OF LINER SHEET.
3. FOR ELECTRICAL CONDUIT PENETRATIONS SEE DWG'S 176307, 176308 AND 176310.
4. FOR PIPING AND DUCTING PENETRATIONS SEE DWG'S 176282, 176287 AND 176302.

GENERAL CONCRETE DESIGN:
DESIGN CODE - ACI 318-89
CLASS 40 (4000 PSI) - FOUNDATION, WALLS AND DECK TOPPING
CLASS 50 (5000 PSI) - PRECAST CONCRETE ROOF PANELS
REINFORCING STEEL - ASTM A615 GRADE 60
WELDED WIRE FABRIC - ASTM A185

7. FOR DOOR LOCATIONS SEE DWG 176258.

STORAGE TANK ENCLOSURE
FOUNDATION PLAN

INFORMATION ONLY

CONTROLLED DOCUMENT CLASS I

SAFETY PAYS

FOR DRAWING INDEX SEE DRAWING NO. 176253		APPROVALS	DATE
SCALE: 1" = 1" IN 1/10"	PROJECT NO. 020036		
SCALE: 1" = 1" IN 1/16"	DESIGN PHASE / DATE / APPROVED	P.E. KWR	11-20-91
QUALITY LEVEL I	TITLE I / 4-11-91 MJP	DES. MGR. SAS	11-21-91
	TITLE II / APPROVED FOR CONSTRUCTION 11-26-91 MJP	DESIGN R LIPPERT	11-9
		CHECKED V.J.B ARR	11-20-91
		DRAWN K KELLER	4-11-91
		SUBCONTRACT NO. S-29588I	
		ISSUED FOR CONSTRUCTION AR ROWLEY	11-27-91

EG&G Idaho, Inc. A/E CONTRACT NO. 1570 FOR U.S. DEPARTMENT OF ENERGY IDAHO OPERATIONS OFFICE IDAHO FALLS, IDAHO

CPP BLDG 659

LET & D
ACID RECYCLE SYSTEM
FOUNDATION PLAN

SIZE	ASCII CHECK NUMBERS ASCII TYPE / LG / CHKC	DRAWING NO.	REV	A/E SHT. NO.
D	20010659 62 220	176263	2	S-1
SCALE 3/8"=1'-0"	SPEC CODE ISSCONST			

NCR

176263 skk

REVISIONS				
REV	DESCRIPTION		DATE	APPROVED
1	AS-BUILT W/NO DCN	GCB	1-22-96	BDN

14

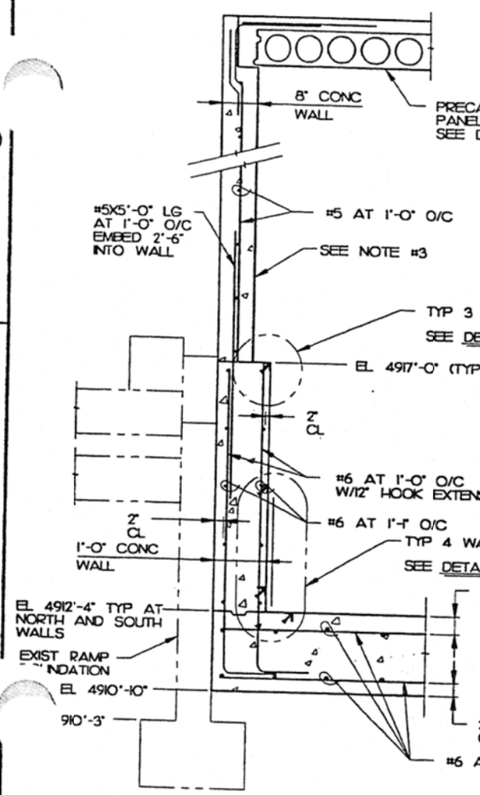

SECTION A 176263

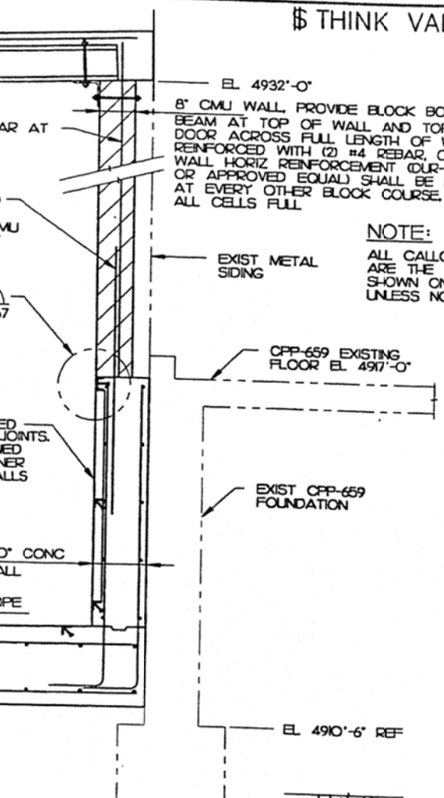

SECTION B 176263

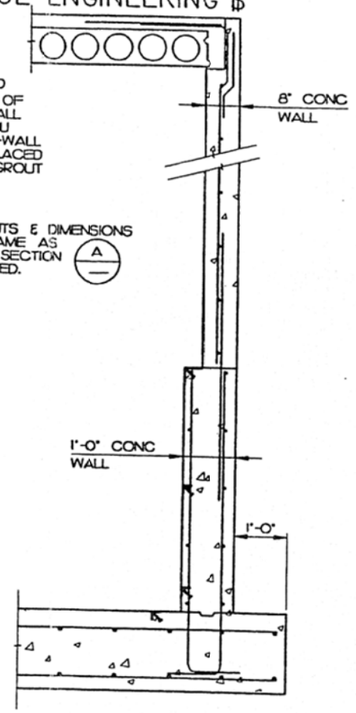

SECTION C 176263

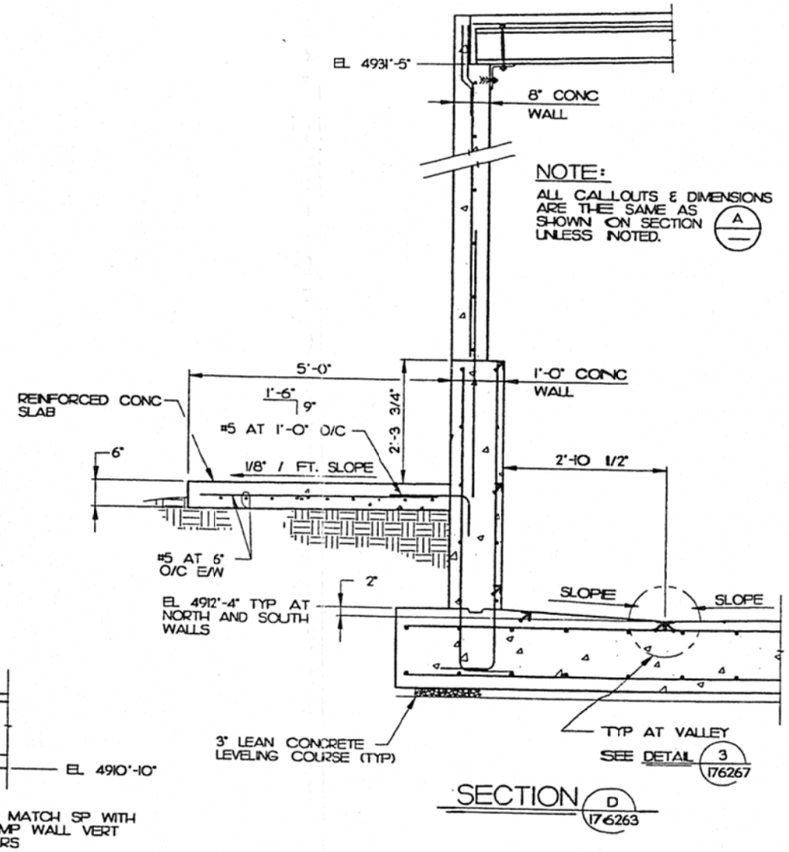

SECTION D 176263

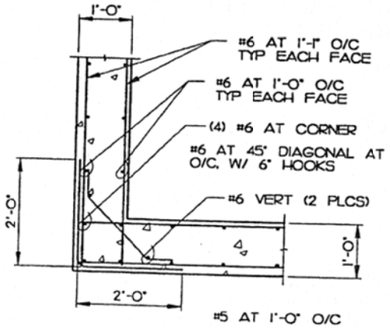

REBAR PLAN AT CORNER
(TYP FOR 12" WALL)

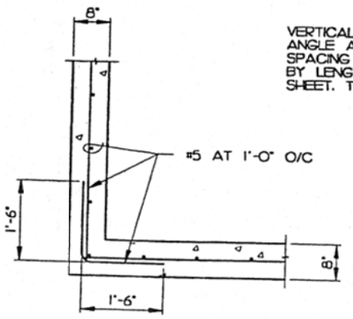

REBAR PLAN AT CORNER
(TYP FOR 8" WALL)

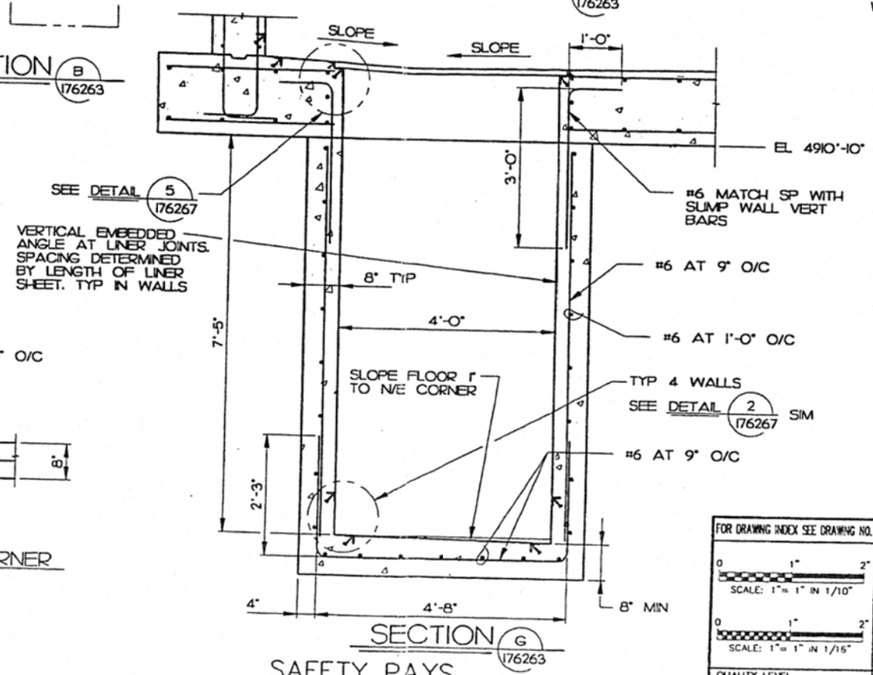

SECTION G 176263

SAFETY PAYS

INFORMATION ONLY

NOTES:

1. METAL LINER NOT SHOWN FOR CLARITY.
2. WALLS AND ROOF SHOWN ON SECTION VIEWS FOR CLARITY.
3. FORM FINISH ON INTERIOR SURFACES OF 8" WALLS REQUIRES EXTRA DEGREE OF SMOOTHNESS PER THE SPECIFICATIONS.

INACTIVE
FOR REF. USE ONLY
This Dwg. Superseded By:
Dwg. No. NONE
Date 1-22-96

FOR DRAWING INDEX SEE DRAWING NO. 176253

SCALE: 1"= 1" IN 1/10

SCALE: 1"= 1" IN 1/16

QUALITY LEVEL II

PROJECT NO. 020036

DESIGN PHASE	DATE APPROVED
TITLE I	X
TITLE II	4-11-91 MP
APPROVED FOR CONSTRUCTION	11-26-91 MP

APPROVALS	DATE
P.M. KWR	11-20-91
DES MGR SAS	11-21-91
DESIGN R LIPPERT	3-91
CHECKED V.B ARR	11-20-91
DRAWN K KELLER	4-11-91
SUBCONTRACT NO. S-29588I	
ISSUED FOR CONSTRUCTION AR ROWLEY	11-27-91

NCR

EG&G Idaho, Inc. A/E CONTRACT NO. 1570 | FOR U.S. DEPARTMENT OF ENERGY IDAHO OPERATIONS OFFICE IDAHO FALLS, IDAHO

CPP BLDG 659

LET & D ACID RECYCLE SYSTEM

FOUNDATION SECTIONS

SIZE	INDEX CODE NUMBER AREA	TYPE	G	DWNG	DRAWING NO.	REV	A/E SHT. NO.
D	200	0659	62	220	176265	1	S-3

SCALE 3/4"=1'-0" SPEC CODE ISSCONST

176265 skk

$ THINK VALUE ENGINEERING $

50

REVISIONS				
REV	DESCRIPTION		DATE	APPROVED
1	AS-BUILT WITH NO DCN	GCB	1-22-96	BDN
2	PER DCN #167238-AB66	ALR	7/6/96 7/9/96	LWG MDS

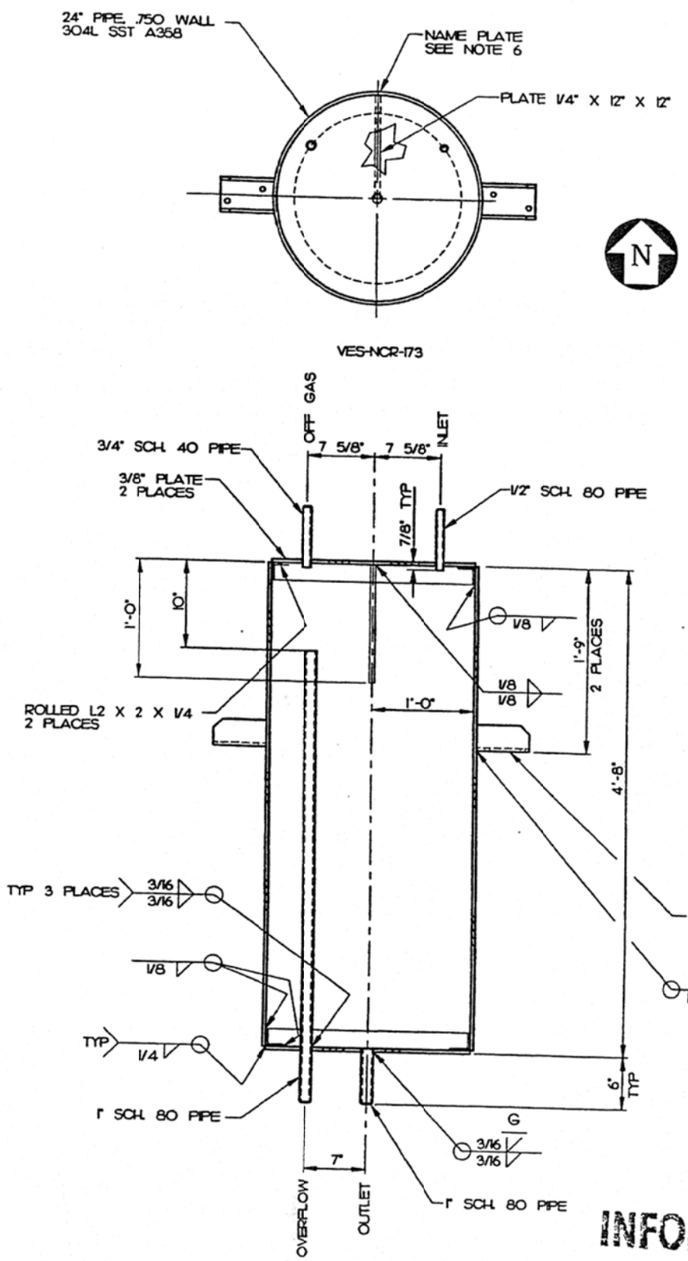

INFORMATION ONLY

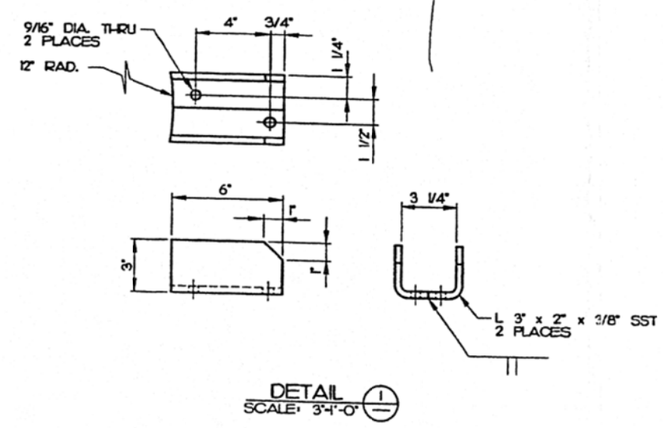

DETAIL 1
SCALE: 3"=1'-0"

NOTES

1. ALL MATERIAL SHALL BE TYPE 304L SST UNLESS OTHERWISE NOTED.
2. ALL WELDS SHALL BE IN ACCORDANCE WITH INEL WELDING PROCEDURE SPECIFICATION MANUAL, PROCEDURE NO. S2.0 OR S3.0.
3. WELD FILLER METAL SHALL BE TYPE 308L.
4. HYDROTEST VESSEL AT 15 PSIG FOR 2 HOURS, NO LEAKS PERMITTED.
5. FINAL PASS OF ALL WELDS SHALL BE INSPECTED IN ACCORDANCE WITH THE WELDING SPECIFICATION.
6. MANUFACTURER SHALL PROVIDE A 304L STAINLESS STEEL NAME PLATE, SPOT WELDED TO VESSEL. INFORMATION SHALL INCLUDE EQUIPMENT TAG NUMBER, TEST PRESSURE, WORKING PRESSURE (ATMOSPHERIC), AND VOLUME (13 CUBIC FEET).

CONTROLLED DOCUMENT CLASS I

FOR DRAWING INDEX SEE DRAWING NO. 176253		APPROVALS	DATE	NCR
PROJECT NO. 020036				EG&G Idaho, Inc. A/E CONTRACT NO. 1570 FOR U.S. DEPARTMENT OF ENERGY IDAHO OPERATIONS OFFICE IDAHO FALLS, IDAHO
SCALE: 1"= 1" IN 1/10"		P.M. KWR	11/20/91	CPP BLDG 659
DESIGN PHASE	DATE APPROVED	DES MGR RJ WATERS	11/26/91	LET & D ACID RECYCLE SYSTEM
		DESIGN MI POPE	11/5/91	
TITLE I	9-8-89 R.I.W.	CHECKED RWN ARR	11/27/91	HEAD TANK VES-NCR-173 & SUPPORT BRACKET
		DRAWN BRONSON	10-89	
TITLE II	4/11/91 MIP	SUBCONTRACT NO. S-295881		SIZE D; HOLE CODE NUMBER AREA 200 TYPE D659 CL 53 ORIG 220; DRAWING NO. 176301; REV 2; A/E SHT. NO. M-4
QUALITY LEVEL II	APPROVED FOR CONSTRUCTION 11/24/91 MIP	ISSUED FOR CONSTRUCTION AR ROWLEY 11-27-91		SCALE 1 1/2"=1'-0" U.N.; SPEC CODE ISSCONST

LETD16

SAFETY PAYS

GENERAL NOTES:

GN1. SEE ARCHITECTURAL DRAWINGS AND SPECIFICATIONS FOR BUILDING ROOFING, SIDING, AND INSULATION.

EARTHWORK NOTES:

E1. EXCAVATION AND BACKFILL SHALL BE PER SPECIFICATION C1, EARTHWORK.

E2. EACH LIFT OF FILL OR BACKFILL SHALL BE COMPACTED TO 95 PERCENT OF ITS MAXIMUM DRY DENSITY DETERMINED IN ACCORDANCE WITH ASTM D1557-78, METHOD B. FILL AND BACKFILL SHALL BE PLACED WITHIN 3 PERCENT OF ITS OPTIMUM MOISTURE CONTENT.

E3. EXISTING MANHOLE COVERS ARE RATED FOR LIGHT DUTY AND SUBCONTRACTOR SHOULD AVOID DRIVING HEAVY CONSTRUCTION VEHICLES OVER MANHOLES.

CONCRETE NOTES:

C1. CAST-IN-PLACE CONCRETE SHALL BE PER SPECIFICATION S2, CONCRETE CONSTRUCTION. COMPRESSIVE STRENGTH SHALL BE 3,000 POUNDS PER SQUARE INCH, UNLESS NOTED OTHERWISE.

GROUT NOTES:

G1. GROUT SHALL BE NONSHRINK, AND SHALL BE A PREMIXED, PROPERLY PROPORTIONED, FACTORY PACKAGED, READY TO USE PRODUCT, CONSISTING OF A PATENTED MIXTURE OF CEMENT, SAND, AND INERT MATERIALS.

G2. GROUT SHALL BE EMBECO 636 BY MASTER BUILDERS, OR APPROVED EQUAL, AND SHALL BE FREE OF CHEMICALLY PRODUCED GAS, FREE OF OXIDIZING CATALYSTS, FREE OF INORGANIC ACCELERATORS, AND NONSTAINING. MANUFACTURER'S PRINTED INSTRUCTIONS SHALL ACCOMPANY THE GROUT SACK.

G3. CONCRETE SURFACES TO BE GROUTED SHALL BE AT LEAST SEVEN DAYS OLD PRIOR TO GROUTING. METAL SURFACES TO BE IN CONTACT WITH GROUT SHALL BE CLEAN AND FREE FROM OIL, GREASE, AND OTHER FOREIGN SUBSTANCES. THE PRESENCE OF TIGHTLY BONDED PAINT IS ACCEPTABLE.

G4. MIXING, PLACING, FINISHING, CURING, AND PROTECTION OF GROUT SHALL BE IN STRICT ACCORDANCE WITH THE MANUFACTURER'S PRINTED INSTRUCTIONS.

G5. PLACING OF GROUT IN DRILLED HOLES FOR INSTALLATION OF ANCHOR BOLTS OR CONCRETE REINFORCEMENT SHALL BE AS FOLLOWS:

FOR A VERTICAL HOLE, FILL THE HOLE WITH GROUT, INSTALL THE BOLT OR REBAR, ROTATE IT 180 DEGREES TO ENSURE REMOVAL OF TRAPPED AIR, AND SECURE AND PLUMB IT WITH THE REQUIRED PROJECTION;

FOR A HORIZONTAL HOLE, THE USE OF A WATERTIGHT PLUG AND PRESSURE GROUTING IS REQUIRED IN ADDITION TO THE ABOVE NOTED REQUIREMENTS.

STEEL NOTES:

S1. ALL STEEL SHALL BE PER SPECIFICATION S1, STRUCTURAL STEEL.

S2. STEEL SHALL BE PAINTED CARBON STEEL (CS), UNLESS NOTED OTHERWISE. CARBON STEEL, INCLUDING EXPOSED SURFACE OF STEEL EMBEDDED IN CONCRETE, SHALL BE PAINTED PER SPECIFICATION PA1, PAINTING.

S3. STAINLESS STEEL REQUIRES NO COATING.

S4. WELDING OF STRUCTURAL MEMBERS AND MISCELLANEOUS METALS SHALL BE PER SPECIFICATION W2, WELDING - STRUCTURAL AND MISCELLANEOUS METALS. ALL WELDS SHALL BE VISUALLY INSPECTED. ALL WELDS ARE TO BE SEALED TO PREVENT ANY CONTAMINATION TRAPS.

S5. LINER PLATE SHALL BE 10 GAUGE STAINLESS STEEL, UNLESS NOTED OTHERWISE. THE LINER SHALL NOT BE WELDED IN PLACE UNTIL THE BUILDING HAS BEEN ENCLOSED AND THE INSIDE AIR TEMPERATURE IN THE CELLS IS BETWEEN 50° AND 80°F.

S6. WELDING OF STAINLESS STEEL LINER SHALL BE PER SPECIFICATION W6, WELDING - STAINLESS STEEL CELL LINER. LINER WELDS TO BE 100% LIQUID PENETRANT TESTED PER SPECIFICATION W6. ALL LINER WELDS ARE TO BE SEALED TO FORM A LEAK TIGHT SURFACE. THE FINISHED WELD CONTOUR SHALL BE DEPOSITED OR GROUND SMOOTH TO ELIMINATE CONTAMINATION TRAPS.

S7. FABRICATION AND ERECTION TOLERANCE FOR HVAC SUPPORTS SHALL BE ± 1/8" UNLESS NOTED OTHERWISE. FABRICATION AND ERECTION TOLERANCE FOR PIPE SUPPORT ELEVATIONS SHALL BE +1/16" -1/4". HORIZONTAL TOLERANCE SHALL BE ± 1/4" UNLESS NOTED OTHERWISE.

S8. ALL STRUCTURAL BOLTS SHALL BE 3/4 INCH DIAMETER HIGH STRENGTH BOLTS, UNLESS NOTED OTHERWISE.

DESIGN CRITERIA:

D1. SAFETY CLASSIFICATION: SAFETY CLASS III, POTENTIALLY CONTAINING NUCLEAR MATERIALS

D2. LIVE LOADS:

A) FLOORS 200 PSF
B) ROOF 30 PSF

D3. SNOW LOAD: 30 PSF

D4. EARTHQUAKE LOADS:

PER 1985 UBC ZONE 3 (MODIFIED BY ADDITION OF VERTICAL REQUIREMENTS), WITH IMPORTANCE FACTOR I = 1.5 FOR CLASS III NUCLEAR BUILDING, "NON-ESSENTIAL" PER UBC.

A) BUILDING DESIGN LOADS

HORIZONTAL COEFFICIENT = 0.21
VERTICAL COEFFICIENT = 0.14

B) EQUIPMENT DESIGN LOADS

HORIZONTAL DESIGN LOADS = 0.34
VERTICAL DESIGN LOADS = 0.23

D5. WIND LOAD:

PER 1985 UBC FOR BASIC WIND SPEED OF 80 MPH, EXPOSURE C.

D6. LATERAL EARTH PRESSURES:

A) ACTIVE PRESSURE (SHORING): 30 PCF EQUIVALENT FLUID PRESSURE

B) AT-REST PRESSURE (BLDG WALLS): 50 PCF EQUIVALENT FLUID PRESSURE

C) COMPACTION ALLOWANCE: 115 PSF UNIFORM PRESSURE

D) PASSIVE RESISTANCE: 350 PCF EQUIVALENT FLUID PRESSURE

ABBREVIATIONS AND SYMBOLS

AB	ANCHOR BOLT	LG	LONG
A/C	ASPHALTIC CONCRETE	LR	LONG LEG HORIZONTAL
ADDL	ADDITIONAL	LP	LOW POINT
APPROX	APPROXIMATELY	MATL	MATERIAL
BOBP	BOTTOM OF BASE PLATE	MAX	MAXIMUM
BOP	BOTTOM OF PIPE	MIN	MINIMUM
BLDG	BUILDING	MS	MISCELLANEOUS SUPPORT
BM	BEAM	NIC	NOT IN CONTRACT
BOT	BOTTOM	NF	NEAR FACE
CHKD	CHECKERED	NO	NUMBER
CJ	CONSTRUCTION JOINT	NTS	NOT TO SCALE
CL	CENTERLINE	OD	OUTSIDE DIAMETER
CLR	CLEAR	OPNG	OPENING
COL	COLUMN	OPP	OPPOSITE
CONC	CONCRETE	PCF	POUNDS PER CUBIC FOOT
CONN	CONNECTION	PSF	POUNDS PER SQUARE FOOT
CS	CARBON STEEL	PL	PLATE
DET	DETAIL	PLATF	PLATFORM
DF	DRAIN FUNNEL	PLCS	PLACES
DIA	DIAMETER	PROJ	PROJECTION
DISCH	DISCHARGE	RAD	RADIUS
DN	DOWN	REF	REFERENCE
DR	DOOR	REQ'D	REQUIRED
DWG	DRAWING	R	RISER
EA	EACH	RECT	RECTANGULAR
EF	EACH FACE	REINF	REINFORCING
ELECT	ELECTRICAL	SCH	SCHEDULE
EL	ELEVATION (HEIGHT)	SECT	SECTION
ELEV	ELEVATION (VIEW)	SH	SHEET
EMBED	EMBEDMENT	SIM	SIMILAR
EQUIP	EQUIPMENT	SQ	SQUARE
EW	EACH WAY	SS	STAINLESS STEEL
EXIST	EXISTING	STD	STANDARD
FD	FLOOR DRAIN	STIFF	STIFFENER
FDN	FOUNDATION	SU	SUMP
FF	FAR FACE	SUPT	SUPPORT
FIN	FINISH	T	TREAD
FLG	FLANGE	T&B	TOP AND BOTTOM
FLR	FLOOR	THK	THICK
GA	GAGE	TO	TOP OF
GALV	GALVANIZED	TOC	TOP OF CONCRETE
HORIZ	HORIZONTAL	TOG	TOP OF GROUT
HP	HIGH POINT	TOS	TOP OF STEEL
HR	HAND RAIL	TYP	TYPICAL
HS	HIGH STRENGTH	UNO	UNLESS NOTED OTHERWISE
ID	INSIDE DIAMETER	VERT	VERTICAL
IE	INVERT ELEVATION	W/	WITH
INSTR	INSTRUMENT	W/O	WITHOUT
KB	KNEE BRACE	WP	WORK POINT
		ø	DIAMETER

LEGEND

EXTENT OF GRATING — SPAN DIRECTION OF GRATING BEARING BARS

EXTENT OF CHKD PL — HR.(R) HANDRAIL(REMOVABLE)

EXTENT OF CONCRETE

OPENING

QUALITY LEVEL III

FOR DRAWING INDEX SEE DRAWING NO. COM

FLUOR
CONTRACT NO. 59936
FOR
U.S. DEPARTMENT OF ENERGY
IDAHO OPERATIONS OFFICE
IDAHO FALLS, IDAHO
CONTRACT DE-AC07-84ID12401

CONTROLLED DOCUMENT CLASS 1

CPP BLDG 1618
LIQUID EFFLUENT TREATMENT & TREATMENT FACILITY

NOTES & ABBREVIATIONS

SIZE	INDEX CODE NUMBER				DRAWING NO.	REV.
	AREA	DWG TYPE	CL	DRG		
D	200	16	60	287	347791	2

SCALE: NONE — SPEC CODE — WORK REQUEST NO. 87-49 — A/E SHEET NO. S-1

DISTRIBUTION CODE NO.

2	9-92	START-UP & TEST AS-BUILT			
1	11-87	AS-BUILT			
Δ	DATE	REVISION DESCRIPTION	DRAWN	CHECK	APP.

DRAWN BY C. BORROEL — ENGR. — DATE 3/20/88
CHECKED BY — DATE
SUPERVISOR C. Borroel — DATE 6-23-88
SUPV. ENGR. — DATE 10-25-88
PROJECT MGR. — APP. DATE 11-7-88
CLIENT — APP. DATE 11-7-88

FOR INFORMATION ONLY

3477 91

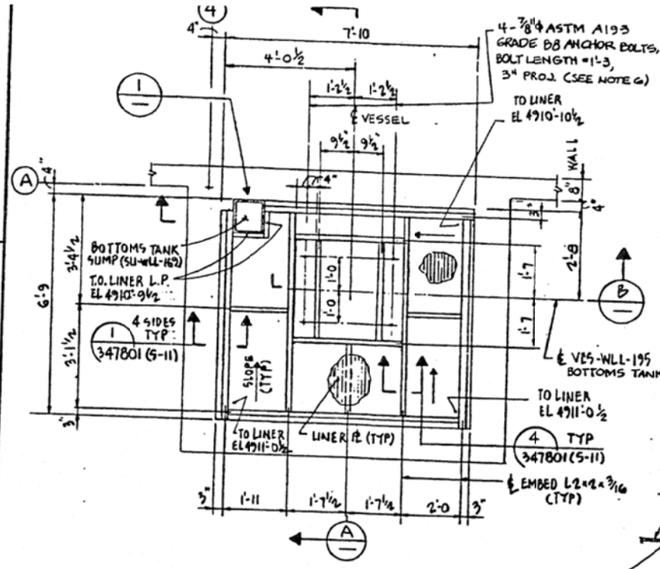

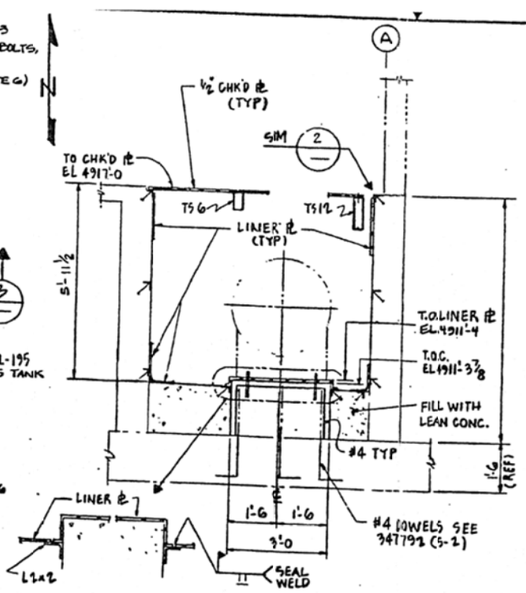

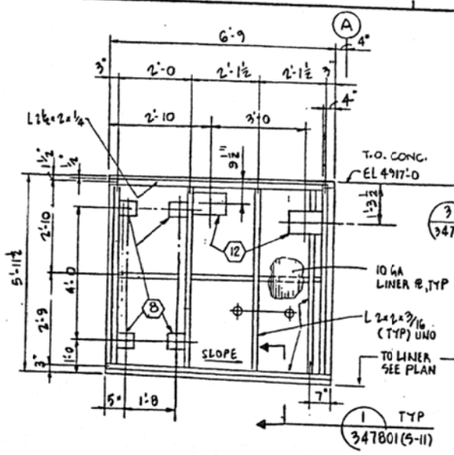

ELEVATION
LOOKING WEST

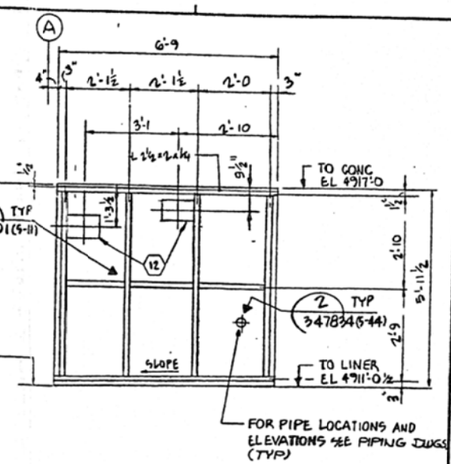

ELEVATION
LOOKING EAST

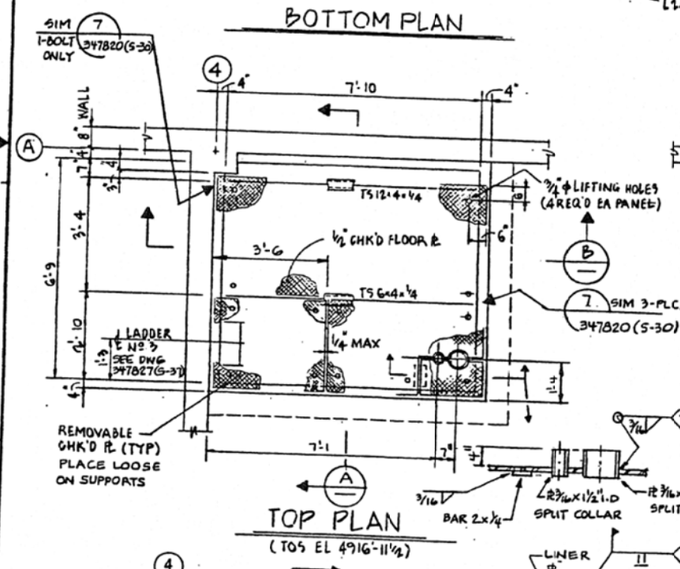

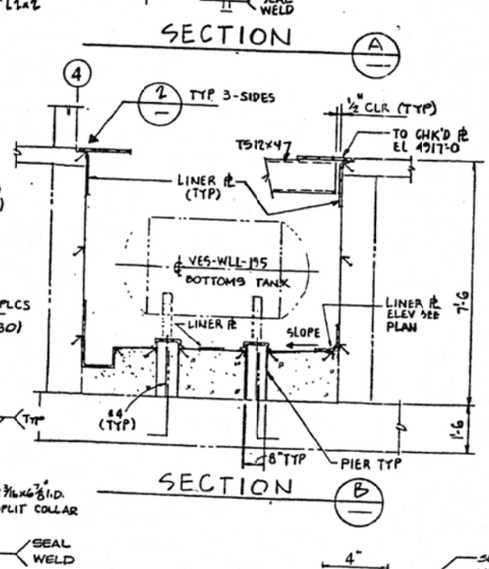

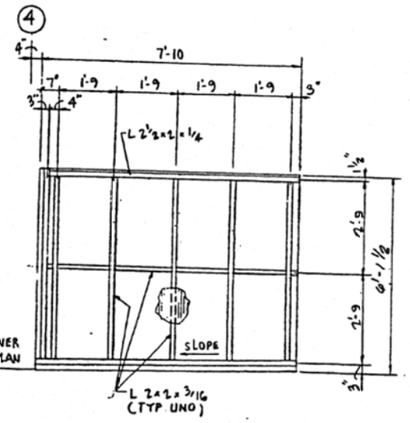

ELEVATION
LOOKING NORTH

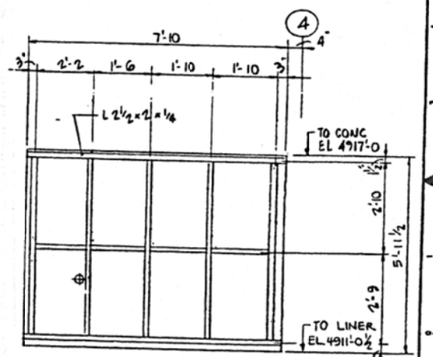

ELEVATION
LOOKING SOUTH

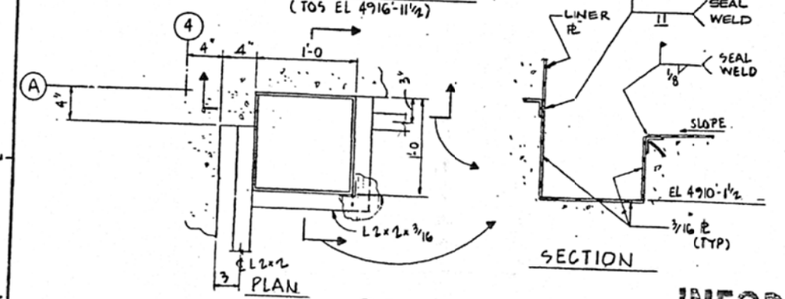

DETAIL
SCALE: 1½" = 1'-0

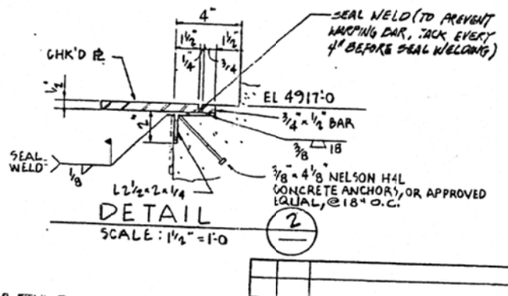

DETAIL
SCALE: 1½" = 1'-0

INFORMATION ONLY

NOTES

1. FOR NOTES & ABBREVIATIONS SEE DWG 347791 (S-1)
2. ALL STRUCTURAL STEEL ON THIS DRAWING INCLUDING EMBEDS AND LINER PLATE TO BE STAINLESS STEEL (SS)
3. FOR EMBED PLATES ⬡ SEE DWG 347835 (S-45)
4. LINER PLATE SHALL BE SEAL WELDED TO EMBEDDED ANGLES AND AT JOINTS SUCH THAT THE COMPLETED PIT FORMS A LEAK-TIGHT CONTAINMENT.
5. LINER PLATE SHALL EXTEND ON ALL SIDES AND TOP OF BOTTOMS TANK PIERS.
6. ALL ANCHOR BOLTS PROJECTING THRU STAINLESS STEEL LINER PLATE SHALL BE SEAL WELDED TO THE LINER PLATE.
7. WELD SS LINER TO THE INTERMEDIATE ANGLES EMBEDS WITH ⅜" ϕ PLUG WELDS, 2'-0" ON CENTERS AS MEASURED ALONG THE LENGTH OF ANGLE.

QUALITY LEVEL III

FOR DRAWING INDEX SEE DRAWING NO. WLH WLL

FLUOR CONTRACT NO. 846304

FOR U.S. DEPARTMENT OF ENERGY IDAHO OPERATIONS OFFICE IDAHO FALLS, IDAHO CONTRACT DE-AC07-84ID12401

CPP BLDG 1618

LIQUID EFFLUENT TREATMENT & DISPOSAL FACILITY

BOTTOMS TANK PIT PLAN, SECTIONS & DETAILS

NO	DATE	REVISION DESCRIPTION
2	9-92	START-UP & TEST AS-BUILT
1	8-89	AS-BUILT

DRAWN BY M MARKOVICH ENGR. DATE 9/12/88
CHECKED BY C SCHULZ DATE 8-24-88
SUPV ENGR. DATE 8-25-88
PROJECT MGR. DATE 10-25-88
APP. DATE 11-7-88
CLIENT APP. DATE 11-7-88

CONTROLLED DOCUMENT CLASS 1

SIZE D | INDEX CODE NUMBER: AREA 200 | DWG TYPE 161 | CL 8 | ORIG 60 | 187 | DRAWING NO. 347796 | REV. 2
SCALE 1½" = 1'-0 UNO | SPEC CODE | WORK REQUEST NO. 87-49 | A/E SHEET NO. S-6
DISTRIBUTION CODE RD

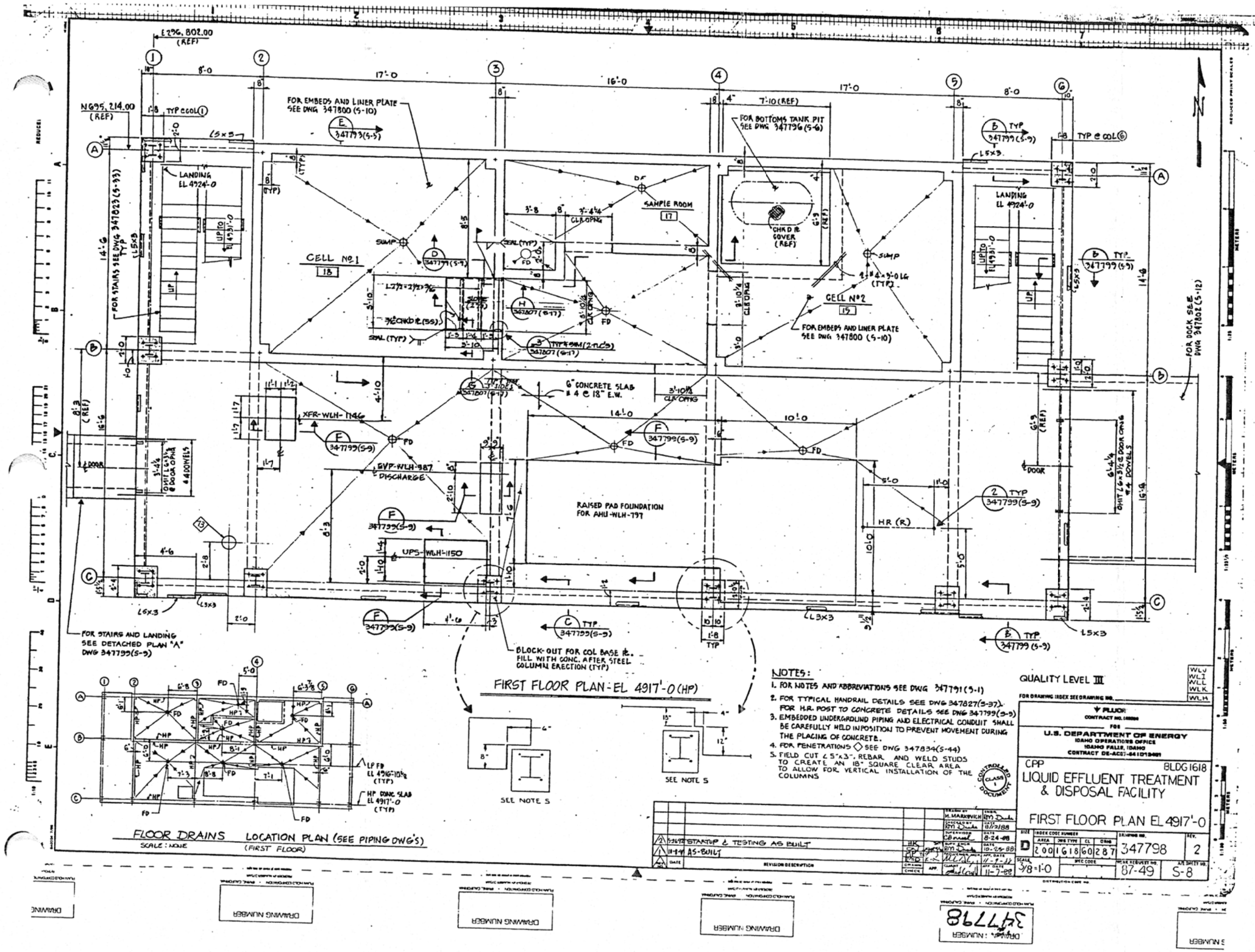

NOTES:

1. FOR NOTES AND ABBREVIATIONS SEE DWG 347791 (S-1)
2. FOR TYPICAL HANDRAIL DETAILS SEE DWG 347827 (S-37). FOR H.R. POST TO CONCRETE DETAILS SEE DWG 347799 (S-9)
3. EMBEDDED UNDERGROUND PIPING AND ELECTRICAL CONDUIT SHALL BE CAREFULLY HELD IN POSITION TO PREVENT MOVEMENT DURING THE PLACING OF CONCRETE.
4. FOR PENETRATIONS ◇ SEE DWG 347834 (S-44)
5. FIELD CUT ∠ 5"x3", REBAR AND WELD STUDS TO CREATE AN 18" SQUARE CLEAR AREA TO ALLOW FOR VERTICAL INSTALLATION OF THE COLUMNS

QUALITY LEVEL III

FOR DRAWING INDEX SEE DRAWING NO.

FLUOR CONTRACT NO. 140000

FOR

U.S. DEPARTMENT OF ENERGY
IDAHO OPERATIONS OFFICE
IDAHO FALLS, IDAHO
CONTRACT DE-AC07-84 ID 12401

CPP BLDG 1618

LIQUID EFFLUENT TREATMENT & DISPOSAL FACILITY

FIRST FLOOR PLAN EL 4917'-0

REV. NO.	DATE	REVISION DESCRIPTION	DRAWN BY	CHECKED BY	SUPERVISOR	DATE	SUPV. ENGR.	DATE	PROJECT ENGR.	APP. DATE	CLIENT	APP. DATE
2	5-26-92	STARTUP & TESTING AS BUILT	H. MARKOVICH	RM Dunk	RM Dunk	8/12/88	CB	8-24-88	RM Dunk	10-25-88		11-9-88
1	11-9-88	AS-BUILT										11-7-88

SIZE	INDEX CODE NUMBER				DRAWING NO.	REV.
D	AREA	DWG TYPE	CL	ORIG	347798	2
	200	1618	60	287		

SCALE 3/8"=1'-0 | SPEC CODE | WORK REQUEST NO. 87-49 | A/E SHEET NO. S-8

INFORMATION ONLY

REVISIONS			
REV.	DESCRIPTION	DATE	APPROVED
0	A.F.C.	4/13/90	R.F.M.
1	AS-BUILT OL 10/90	10/31/90	
2	INACTIVATE PER DCN #125992-R03		
3	SEE DAR 93956 MEW 8-5-02	8-15-02	DEJ

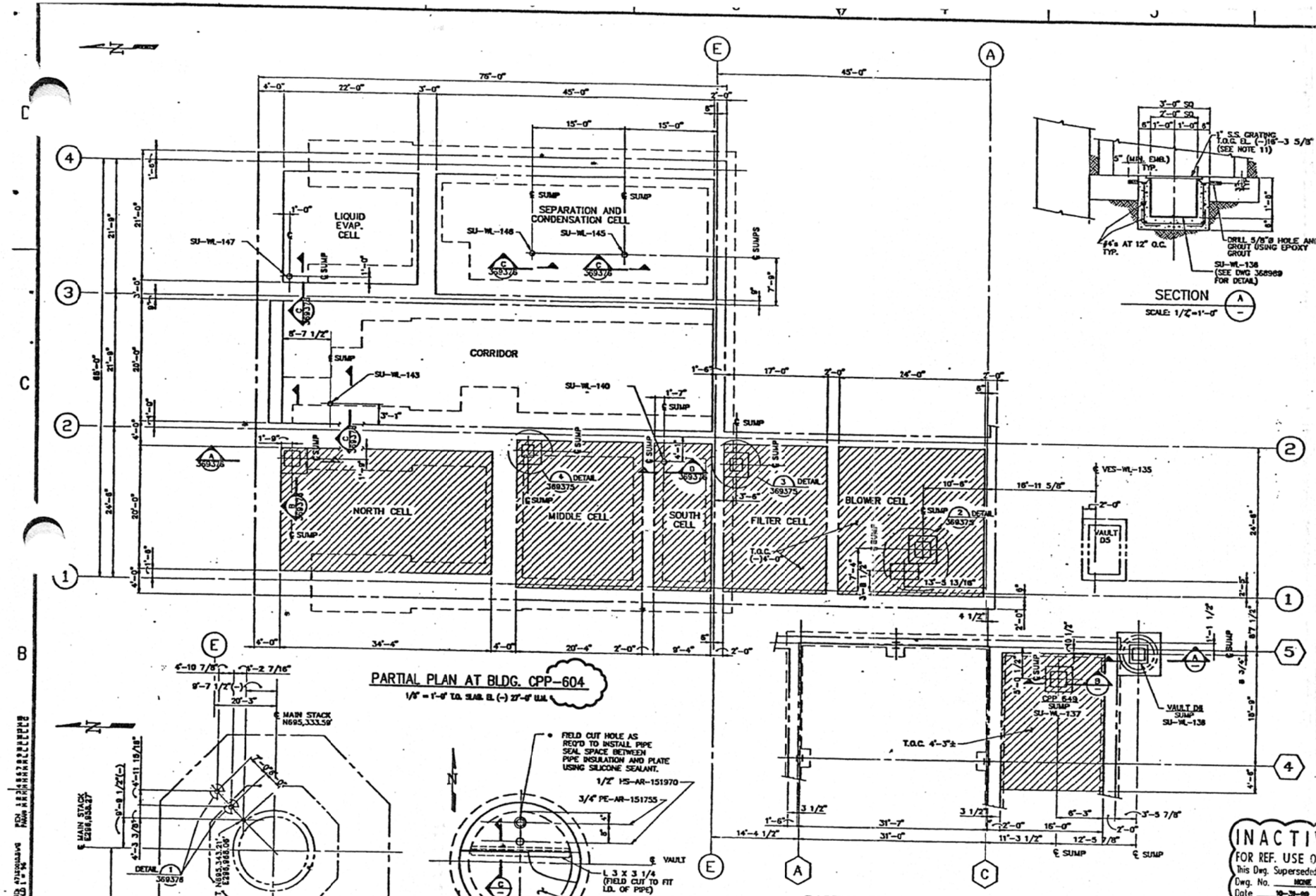

PARTIAL PLAN AT BLDG. CPP-604

1/8" = 1'-0" T.O. SLAB EL. (-) 27'-0" U.N.

PARTIAL PLAN AT BLDG. CPP 649

1/8" = 1'-0" T.O. SLAB EL. (-)4'-3"

SECTION A

SCALE: 1/2"=1'-0"

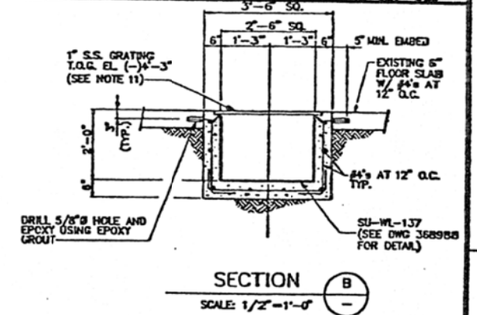

SECTION B

SCALE: 1/2"=1'-0"

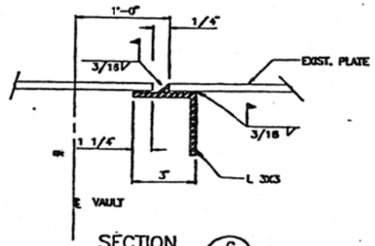

SECTION C

SCALE: NONE

LEGEND

CELL AREAS WHICH SHALL RECIEVE COATING ON FLOOR SURFACE AND 3'-0" UP EACH WALL.

EXISTING FOOTINGS

EXISTING CELL WALLS

GENERAL NOTES:

1. FOR DRAWING INDEX, SEE DWG. 369382.
2. S.S. SUMPS SHOULD BE SECURED IN POSITION PRIOR TO PLACING WALL CONCRETE.
3. FOR S.S. SUMP DETAILS AND ORIENTATION, SEE MECH. DWG. 368968, 368989, AND 368990.
4. CONSTRUCTION TOLERANCES:
   A. SUMP ℄ LOCATION: ±1/4".
   B. OUT-TO-OUT SUMP: ±1/2".
   C. SUMP T.O.C. ELEV.: +0", -1/16".
5. CONCRETE SHALL BE MIXED AND PLACED IN ACCORDANCE WITH THE AMERICAN CONCRETE INSTITUTE CODE, ACI-318-89.
6. MINIMUM CONCRETE STRENGTH AT 28 DAYS SHALL BE 4000 P.S.I.
7. REINFORCING SHALL CONFORM TO ASTM A615 GRADE 60.
8. BAR LAPS AND HOOKS SHALL BE IN ACCORDANCE WITH THE PROVISIONS AS STATED IN ACI-318-89.
9. MINIMUM CLEAR DISTANCE BETWEEN FACE OF CONCRETE AND OUTSIDE BARS SHALL BE AS REQUIRED BY ACI-318-89.
10. BUILDING ELEVATION 0'-0" = IDAHO FALLS ELEVATION 4917.00
11. GRATING SHALL BE FIELD FABRICATED TO FIT AROUND SUMP PENETRATIONS.

INACTIVE
FOR REF. USE ONLY
This Dwg. Superseded By:
Dwg. No. NONE
Date 10-31-90

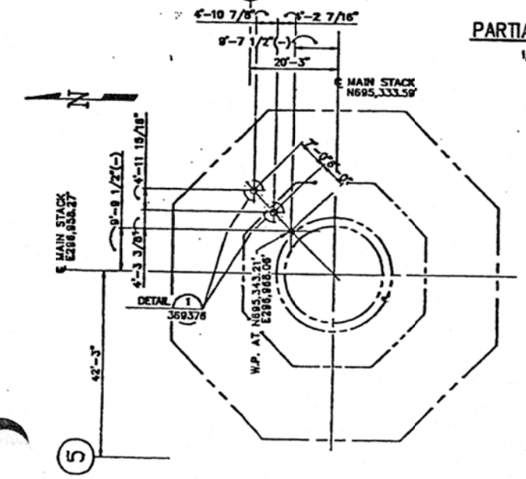

PARTIAL PLAN AT MAIN STACK

1/16" = 1'-0"

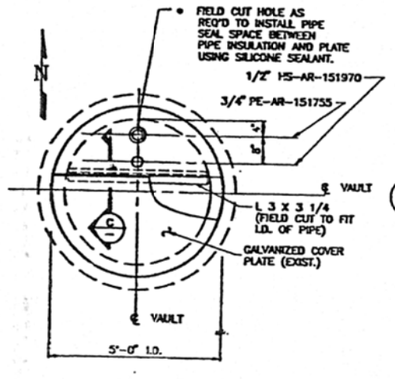

PLAN— VAULT D6 COVER PLATE

SCALE: NONE

INFORMATION ONLY

DESIGN INTERFACE			DRAWING STATUS	APPROVALS		DATE
	INITIAL	DATE	DESIGN PHASE	DATE		
MECHANICAL	J.E.A.	3/28/90	APPROVED		ORIGINATOR	DS-3/23/90
ELECTRICAL	G.E.C.	3/28/90			CHECKER	R.E.W. 3/23/90
PROCESS					RESPONSIBLE LEE	T.S.T. 3/23/90
STRUCTURAL	T.S.T.	3/28/90			TASK MANAGER	K.H.H. 3/23/90
ENVIRONMENTAL	C.R.C.	3/28/90			QA ENGINEER	J.R.W. 3/28/90
ARCHITECTURAL					CHIEF ENGINEER	D.R.P. 4/2/90
PIPING	D.R.D.	3/28/90			S-RD PROJECT MGR.	P.A.P. 4/9/90
					M&O PROJECT MGR.	R.E.H. 4/12/90
					PROJECT NO.	9356.031
			QUALITY LEVEL		SUBCONTRACT NO.	S-207315E
					ISSUED FOR CONSTRUCTION	

United Engineers & Constructors

A Raytheon Engineers & Constructors Division

US DEPARTMENT OF ENERGY IDAHO OPERATIONS OFFICE IDAHO FALLS, IDAHO

ICPP BLDG's 604 & 649

PWL COLLECTION SYSTEM SUMP AND FND. DETAILS

SIZE	INDEX CODE NUMBER			DRAWING NO.	REV.
	AREA	SYS.	TYP.		
D	200	DEDE	609813	369374	3

SCALE: AS NOTED

STSC CODE

A/E SHEET NO. S-001

REV.	REVISION DESCRIPTION	APPROVED		
		DATE	UE&C	WINCO
0	AFC	9/30/92	NDA	DLP
1	AS-BUILT			
2	INACTIVATED PER DCN 160559-AB19 TULLIS 10/4/95			

ITEM NO.	DESCRIPTION	PART NO.	Q/A
1	VAULT LINER SYSTEM ASSEMBLY	370862-1	–
2	VAULT LINER INSTALLATION	370864-1	1
3	VAULT SUMP LINER ASSEMBLY	370869-1	1
4	VAULT PIPING ASSEMBLY	370894-1	–
5	VAULT LINER WALL ATTACHMENT	370882-1	40
6	VAULT LINER SADDLE INTERFACE	370878-1	4
7	ZONE MARKERS – ORANGE 3" WIDE TAPE 3'-0" LONG McMASTER-CARR NO. 5997T96 OR APPROVED EQUIVALENT		12

INSTALLATION NOTES

RECOMMENDED SEQUENCE. METHOD ACTUALLY USED TO BE APPROVED BY CONTRACTOR.

ACTIVITIES TO BE PERFORMED BY OTHERS PRIOR TO LINER SYSTEM INSTALLATION.

1. ERECT VENTILATION CONTROL BARRIER. REMOVE VAULT HATCH PLUG AND INSTALL VAULT VENTILATION.
2. DECONTAMINATE VAULT WALLS, CEILING AND FLOORS, REMOVING ANY UNSOUND CONCRETE, LOOSE WALL COATING, DIRT, FOREIGN MATTER, AND DEBRIS. CLEAN WALLS AT LINER ATTACHMENT HEIGHT PER DWG 370882.

LINER SYSTEM INSTALLATION PREWORK.

3. REMOVE SCALE FROM LOWER 4" OF EACH SADDLE.
4. GROUT SUMP BOTTOM PER DWG 370870 (GROUTING #1)
5. REPAIR VAULT FLOOR AND WALLS PER DWG 370907.
6. PLACE PORTABLE SHIELDS INTO VAULT.
7. CUT, TERMINATE AND REMOVE EXISTING PIPES PER DWG 370893. INSTALL WELDED STUDS FOR PIPE SUPPORT ON TANK SADDLE OF WL-102 PER DWG 370899.
8. REMOVE LADDERS, PIPE, TOOLS, AND EXCESS MATERIAL. RETAIN AND SEGREGATE MATERIAL THAT WILL BE REUSED.
9. OBTAIN VAULT AS-BUILT DIMENSIONS PER DRAWING NO. 370917. MARK PARALLEL CHALK LINES ALONG EACH WALL OF THE VAULT AT 3'-0" AND 3'-4" ABOVE THE FLOOR.
10. INCORPORATE DIMENSIONAL CHANGES AS REQUIRED FROM 370917 TO DWG 370867.

LINER SYSTEM INSTALLATION

11. PLACE PORTABLE FLOOR CRANE INTO VAULT WITHOUT LINER SUPPORT SHELF DWG 370915 (ITEM 2). RETRACT HOISTING ARM INTO THE VERTICAL STOWED DOWN POSITION WHEN NOT IN USE.
12. PREPARE SUMP LINER ASSEMBLY.
13. PREASSEMBLE SUMP LINER PER DWG 370870.
14. USING POWDER ACTUATED NAILER INSTALL WALL HOOKS AT THE LOCATIONS SHOWN ON DWG 370864.
15. INSTALL SUMP LINER PER DWG 370869.
16. REMOVE PORTABLE SHIELDS FROM VAULT. INSTALL LINER SUPPORT SHELF ON PORTABLE CRANE.
17. PLACE LINER ASSEMBLIES (DWG 370867, ITEMS 1 AND 2) INTO VAULT AND UNFOLD PER DWG 370865.
18. REMOVE PORTABLE FLOOR CRANE FROM VAULT.

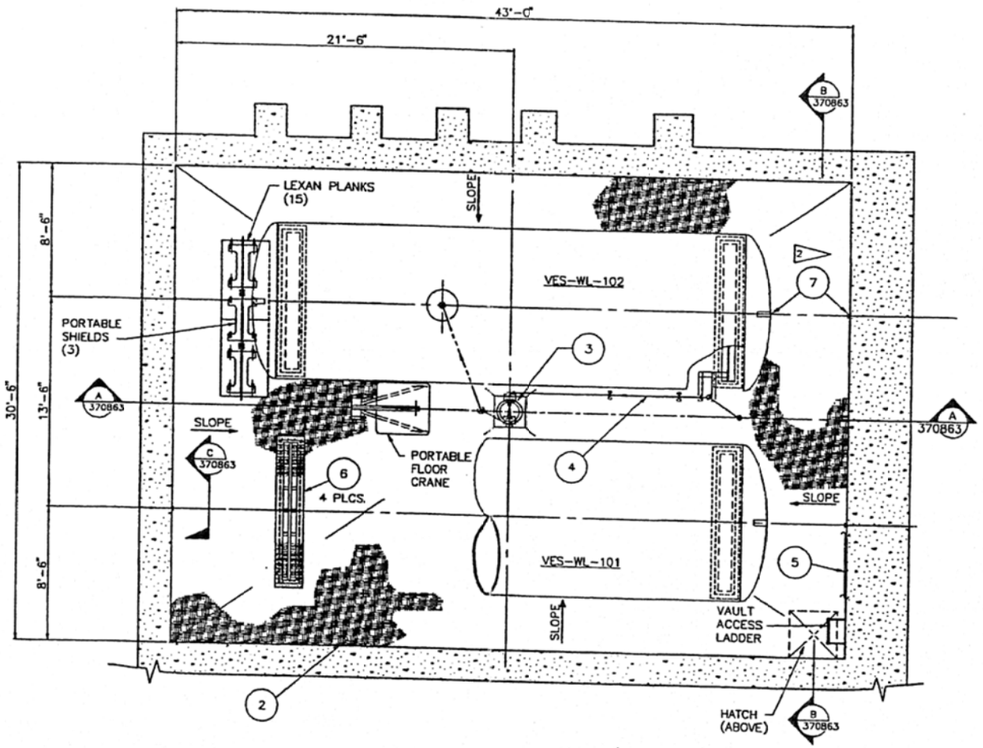

VAULT LINER SYSTEM ASSEMBLY (1)

ATTACH LINER TO WALL

19. RAISE LINER ASSEMBLIES UP THE WALL USING TEMPORARY SUPPORT HOOKS AND ROPES PER DWG 370865.

TANK SADDLE FRAME INTERFACE

20. INSTALL THE TANK SADDLE FRAMES PER DWG 370878

INSTALL PIPING

21. INSTALL THE PIPE SUPPORT ON SADDLE PER DWG 370899
22. REINSTALL VAULT PIPING PER DWG 370894. MEASURE HORIZONTAL AND VERTICAL MAKEUP DIMENSIONS. TRIM TO LENGTH AND WELD TWO SPOOLS OUTSIDE VAULT. REMOVE R-CON BLIND FLANGES AND ATTACH SPOOLS TO JET AND VES-WL-102
23. REMOVE ALL LOOSE MATERIAL. LEAVE PORTABLE SHIELD AND LEXAN PLANKS IN VAULT.

INACTIVE
FOR REF. USE ONLY
This Dwg. Superseded By:
Dwg. No. 400815
Date 10/4/95

INFORMATION ONLY

GENERAL NOTES:

1) SCALE IS PROVIDED FOR REFERENCE ONLY. ACCURACY OF DIMENSIONS IS SUBJECT TO FIELD VERIFICATION.

2 ZONE MARKERS TO BE LOCATED ON EACH END OF EACH VESSEL ON CENTER LINE AS SHOWN ON DRAWING 370863 IN SECTION B, AND ON THE ADJACENT WALLS AS SHOWN ON DRAWING 370863 IN SECTION C.

3) ALL DEBRIS SHALL BE REMOVED FROM VAULT FLOOR PRIOR TO LINER INSTALLATION.

REFERENCE DRAWINGS	
DWG. NO.	TITLE
370863	VAULT LINER ASSY-ELEV.
370869	VAULT SUMP LINER-ASS'Y
370878	TANK/SADDLE INTERFACE
370882	WALL ATTACHMENT
370885	VAULT SHIELD ASS'Y
370894	VAULT PIPING-PLAN
370905	VAULT ACCESS LADDER

REFERENCE DRAWINGS	
DWG. NO.	TITLE
370915	PORTABLE FLOOR CRANE
370917	LINER-VAULT MEASUREMENTS
370864	VAULT LINER INSTALL.

A/E ENGINEER OF RECORD
DATE APPROVED

DESIGN INTERFACE			DRAWING STATUS		APPROVALS		DATE
	INITIAL	DATE	DESIGN PHASE	DATE	ORIGINATOR		
PIPING				APPROVED	CHECKER		
MECHANICAL			90%	9/01/92 DTC	RESPONSIBLE UDE		
ELECTRICAL			AFC	9/29/92 DTC	TASK MANAGER		
PROCESS					QA ENGINEER		
STRUCTURAL					CHIEF ENGINEER		
ENVIRONMENTAL					USAEC PROJECT MGR.	NA	9/30/92
ARCHITECTURAL					WMO PROJECT MGR.	DLP	9/30/92
INSTRUMENTATION					PROJECT NO. 9304.153		
					SUBCONTRACT NO. 3290331		
			QUALITY LEVEL II		ISSUED FOR CONSTRUCTION		

United Engineers & Constructors
A Raytheon Company
Western Operations
for
US DEPARTMENT OF ENERGY
IDAHO OPERATIONS OFFICE
IDAHO FALLS, IDAHO

ICPP BLDG. 604
WL-101/102 VAULT PROJECT
VAULT LINER SYSTEM ASSEMBLY
PLAN & INSTALLATION NOTES

SIZE	CONTR. NUMBER	DRAWING NO.	REV.
D	200 0604 60817	370862	2

SCALE 1/4"= 1'0" SPEC. 13006 A/E SHEET NO.

WL

370862

EDC

REV.	REVISION DESCRIPTION	APPROVED DATE	UE&C	WINCO
0	AFC	9/30/92	NDA	DLP
1	AS-BUILT			
2	INACTIVATED PER DCN 160559-A820 TULLIS 10/4/95			

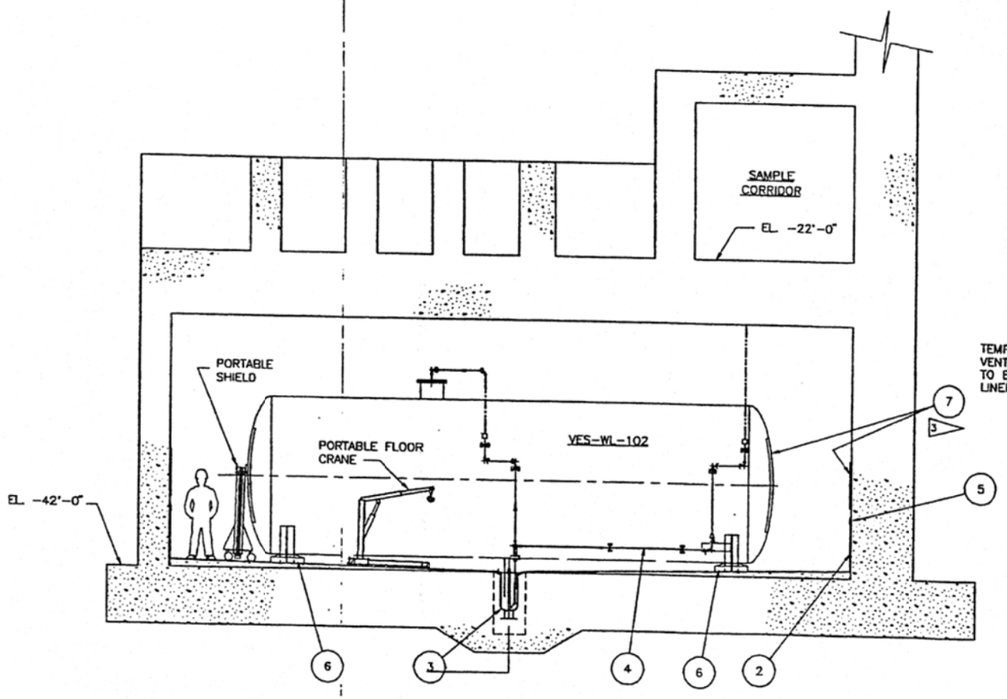

SECTION A
SCALE: 1/4"=1'-0" 370862

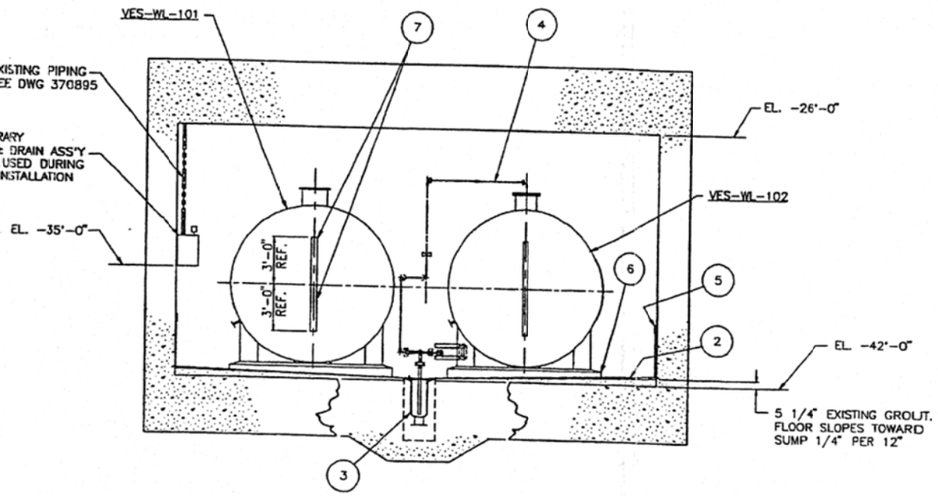

SECTION B
SCALE: 1/4"=1'-0" 370862

INACTIVE
FOR REF. USE ONLY
This Dwg. Superseded By:
Dwg. No. NONE
Date 10/4/95

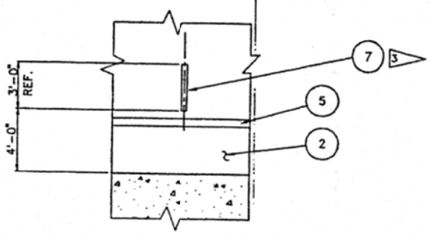

SECTION C
SCALE: 1/4"=1'-0" 370862
TYPICAL ZONE DEMARKATION ON WALL

GENERAL NOTES:

1) SCALE IS PROVIDED FOR REFERENCE ONLY, ACCURACY OF DIMENSIONS IS SUBJECT TO FIELD VERIFICATION.

2) FOR ITEM DESCRIPTIONS, SEE DRAWING 370862.

3 ZONE MARKERS TO BE LOCATED ON EACH END OF EACH VESSEL ON CENTER LINE AS SHOWN ON DRAWING 370863 IN SECTION B, AND ON THE ADJACENT WALLS AS SHOWN ON DRAWING 370863 IN SECTION C.

REFERENCE DRAWINGS	
DWG. NO.	TITLE
370862	VAULT LINER SYSTEM-PLAN
370869	VAULT SUMP LINER ASSY
370878	TANK/SADDLE INTERFACE
370882	WALL ATTACHMENT
370885	VAULT SHIELD ASSY
370894	VAULT PIPING PLAN
370905	VAULT ACCESS LADDER

REFERENCE DRAWINGS	
DWG. NO.	TITLE
370915	PORTABLE FLOOR CRANE
370917	LINER-VAULT MEASUREMENTS
370864	VAULT LINER INSTALLATION
370865	VAULT LINER INSTAL. NOTES

A/E ENGINEER OF RECORD
DATE APPROVED

DESIGN INTERFACE	INITIAL	DATE
PIPING		
MECHANICAL		
ELECTRICAL		
PROCESS		
STRUCTURAL		
ENVIRONMENTAL		
ARCHITECTURAL		
INSTRUMENTATION		

DRAWING STATUS	DATE
DESIGN PHASE	APPROVED
90%	9/1/92 DTC
AFC	9/21/92 DTC

QUALITY LEVEL II

APPROVALS		DATE
ORIGINATOR		
CHECKER		
RESPONSIBLE LDE		
TASK MANAGER		
QA ENGINEER		
CHIEF ENGINEER		
UE&C PROJECT MGR.	NA	9/30/92
M&O PROJECT MGR.	DLP	9/30/92

PROJECT NO. 9364.152
SUBCONTRACT NO. 5292031
ISSUED FOR CONSTRUCTION

United Engineers & Constructors
Western Operations
FOR
US DEPARTMENT OF ENERGY
IDAHO OPERATIONS OFFICE
IDAHO FALLS, IDAHO

ICPP BLDG. 604
WL-101/102 VAULT PROJECT
VAULT LINER SYSTEM ASSEMBLY
SECTIONS

SIZE	INDEX CODE NUMBER AREA	SYM	CL	CODE	DRAWING NO.	REV.
D	200	0604	50	812	370863	2

SCALE AS NOTED
SPEC CODE
A/E SHEET NO.

EDC

INFORMATION ONLY

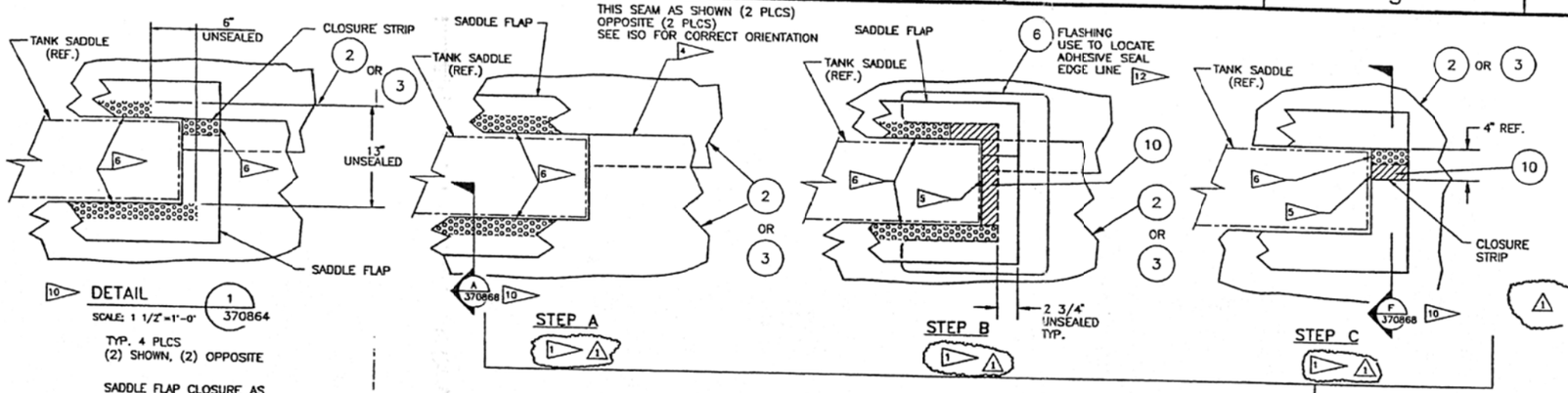

DETAIL 1 370864
SCALE: 1 1/2" = 1'-0"

TYP. 4 PLCS
(2) SHOWN, (2) OPPOSITE

SADDLE FLAP CLOSURE AS RECEIVED FROM FACTORY 101 & 102 LINER

SADDLE FLAP CLOSURE INSTALLATION SEQUENCE

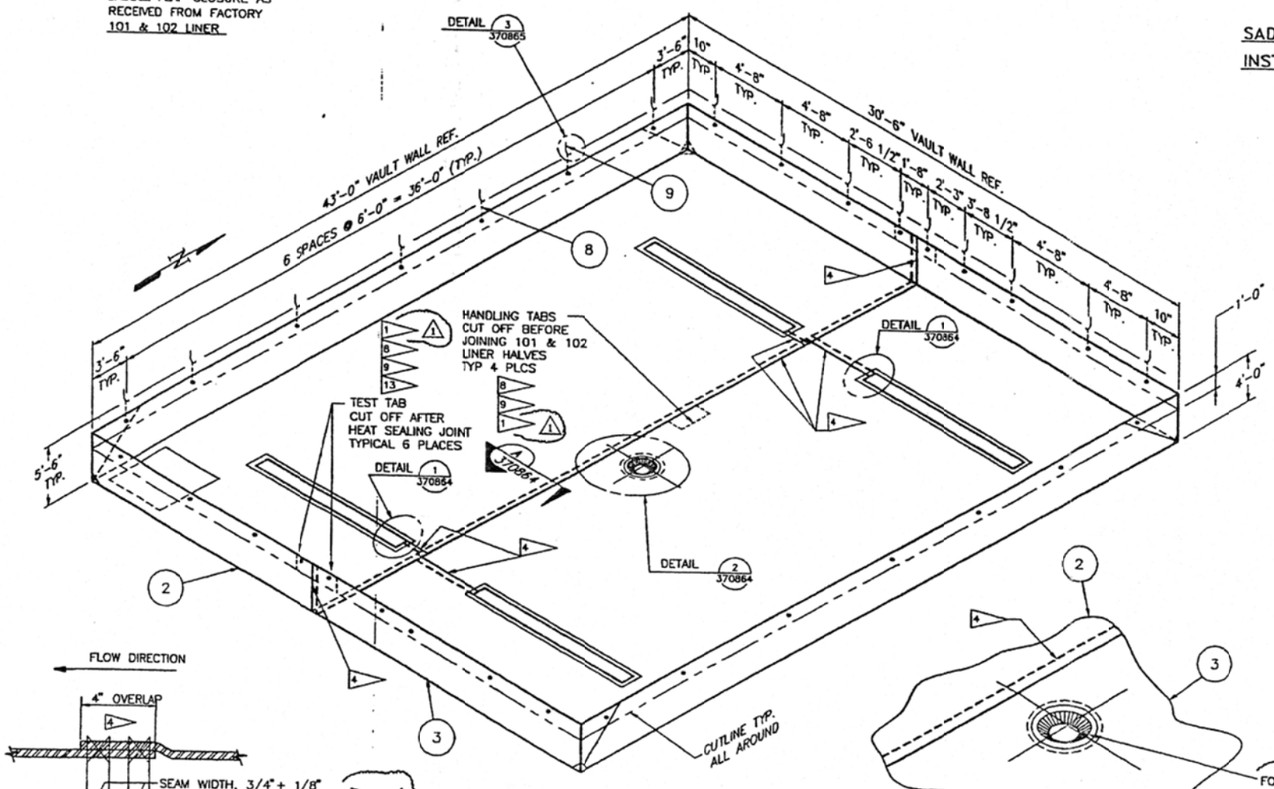

VAULT LINER INSTALLATION ISOMETRIC (1)

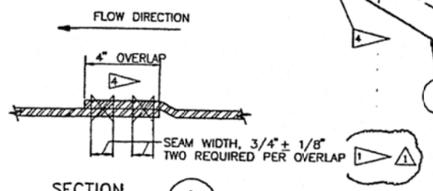

SECTION A 370864
SCALE: NONE
LINER SEAL

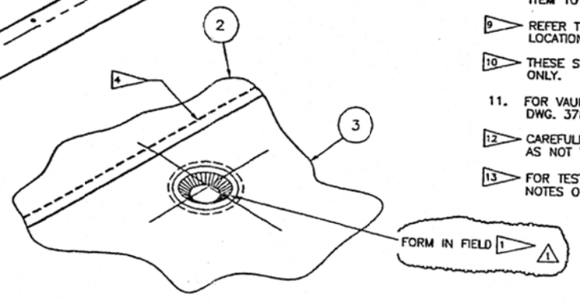

DETAIL 2 370864
SCALE: NONE

REV.	REVISION DESCRIPTION	APPROVED DATE	UE&C	WINCO
1	REVISED NOTE 1 & DELETED ITEM 4	12/7/92	NDA	DLP
2	AS-BUILT			
3	INACTIVATED PER DCN 160559-AB21 TULLIS	10/4/95	MW	[illegible]

ITEM NO.	DESCRIPTION	PART NO.	Q/A
1	VAULT LINER INSTALLATION	370864-1	–
2	101 LINER ASSEMBLY	370867-1	1
3	102 LINER ASSEMBLY	370867-2	1
4			
5	NYLON REINFORCED TAPE, 1" WIDE ROLL (FOR FOLDING HYPALON LINER) MCMASTER-CARR 1926T64 OR APPROVED EQUAL		1
6	FLASHING	370868-11	1
7	MARKING INK, SILVER COMPATABLE WITH HYPALON		A/R
8	NYLON ROPE, 3/8" DIA. BRAIDED		400 FT.
9	WALL HOOK, 304L S.S. BAR 1/4" x 1" x 9" LG.		35
10	ADHESIVE, 1 GAL. (HYPALON DISSOLVED IN SOLVENT)		1
11	SHOT BAGS, MCMASTER CARR 6565A11 OR APPROVED EQUIVALENT		10
12	STEEL SHOT "00"		100 LBS.

NOTES:

1. FOR INSTALLATION SEQUENCE SEE NOTES & DETAILS DWG. 370865.
2. METHOD OF CONNNECTING HYPALON SHEETS IS DOUBLE SEAM SEALED OVER LAP JOINTS. OVERLAPS TO BE 4" WIDE.
3. SHEETS ARE TO BE OVERLAPPED IN IN DIRECTION OF FLOW
4. FIELD HEAT SEAL JOINT.
5. FIELD ADHESIVE JOINT.
6. FACTORY JOINT (REF. ONLY).
7. SECTION VIEWS ARE NOT TO SCALE.
8. PAINT (FLOOD) SEAL CUT EDGE WITH ITEM 10 ADHESIVE.
9. REFER TO DRAWING 370867 FOR TAB LOCATIONS.
10. THESE SECTION VIEWS ARE FOR REFERENCE ONLY.
11. FOR VAULT LINER FOLDING PATTERN SEE DWG. 378066.
12. CAREFULLY INSERT FLASHING (ITEM 6) SO AS NOT TO DAMAGE SEAL.
13. FOR TEST REQUIREMENTS SEE GENERAL NOTES ON DRAWING 370865.
14. USE ONE 3/8" X 2 1/4" SST DROP ANCHOR BOLTS FOR EACH WALL HOOK, IN LIEU OF THE TWO 3/16" X 1 5/8" ANCHORS. AND CHANGE HOLE SIZE FROM 0.203 DIA. TO 7/16".

INACTIVE
FOR REF. USE ONLY
This Dwg. Superseded By:
Dwg. No. NONE
Date 10/4/95

REFERENCE DRAWINGS	
	TITLE
370867	LINER FABRICATION
370868	LINER FABRICATION DETS.
370866	LINER FOLDING PATTERN
370865	LINER INSTALL. NOTES
370862	VAULT SYSTEM ASSEMBLY

A/E ENGINEER OF RECORD

DATE	APPROVED

DESIGN INTERFACE	INITIAL	DATE
PIPING		
MECHANICAL		
ELECTRICAL		
PROCESS		
STRUCTURAL		
ENVIRONMENTAL		
ARCHITECTURAL		
INSTRUMENTATION		

DRAWING STATUS	DATE APPROVED
DESIGN PHASE	
90%	9/1/92 DTC
AFC	9/30/92 DTC
1	
QUALITY LEVEL II	

APPROVALS		DATE
ORIGINATOR		
CHECKER		
RESPONSIBLE LDE		
TASK MANAGER		
QA ENGINEER		
CHIEF ENGINEER		
UE&C PROJECT MGR.	NA	9/30/92
M&O PROJECT MGR.	DLP	9/30/92

PROJECT NO. 9354.152
SUBCONTRACT NO. 929731
ISSUED FOR CONSTRUCTION AFC 9/30/92 DTC

United Engineers & Constructors
A Raytheon Company
Western Operations
FOR
US DEPARTMENT OF ENERGY
IDAHO OPERATIONS OFFICE
IDAHO FALLS, IDAHO

ICPP BLDG. 604
WL-101/102 VAULT PROJECT
VAULT LINER INSTALLATION

SIZE	AREA	DWG. TYPE	CI.	DWG. NO.	REV.
D	200	0604	61	212	3

SCALE AS NOTED
WPC/CODE 02778
A/E SHEET NO.

DRAWING NO. 370864

EDC

INFORMATION ONLY

INSTALLATION NOTES

RECOMMENDED SEQUENCE. METHOD ACTUALLY USED TO BE APPRORVED BY CONTRACTOR.

PLACE LINER ASSEMBLIES

NOTE: WEAR ONLY CLEAN SOFT SOLED SHOES WHEN WALKING ON LINER. REMOVE FOREIGN DEBRIS FROM VAULT FLOOR PRIOR TO SPREADING LINER. REMOVE ANY MATERIAL THAT MAY FALL ON TOP OF LINER FROM VAULT.

1. FILL EACH SHOT BAG (DWG 370864, ITEM 11) WITH 10 POUNDS OF SHOT (DWG 370864, ITEM 12) AND TIE CLOSED. CUT ROPE (DWG 370864, ITEM 8) TO FOUR FOOT LONG PIECES (32 REQUIRED) AND TIE TO GROMMETS ALONG FINAL TOP EDGE. EVENLY CUT THE REMAINING ROPE AND TIE TO REMAINING GROMMETS. THESE FINAL LENGTHS SHOULD BE APPROXIMATELY 16 FEET LONG.
2. FOLD 102 AND 101 VAULT LINER ASSEMBLIES (DWG 370864, ITEMS 2 AND 3) INTO TIGHT PACKAGES AS SHOWN ON DWG 370866, VIEWS A AND B, AND SECURE WITH STRAPPING TAPE.
3. LOWER 102 VAULT LINER ASSEMBLY INTO VAULT USING NYLON STRAPS OR FIBER ROPE ONTO PORTABLE FLOOR CRANE.
4. ORIENT LINER PACKAGE ON SUPPORT SHELF IN CORRECT DIRECTION WITH CORRECT SIDE UP AS MARKED ON LINER SURFACE (PER DWG 370866, VIEW B) TO ALLOW UNFOLDING DIRECTLY OFF CRANE.
5. MOVE 102 LINER HALF TO NORTHEAST CORNER OF VAULT PER VAULT LINER PACKAGE PLACEMENT SHOWN ON THIS DRAWING.
6. POSITION FLOOR CRANE NEXT TO EAST WALL, 4 FEET FROM NORTH WALL, AND REMOVE STRAPPING TAPE.
7. UNFOLD FIRST THREE (3) LAYERS OF FOLDED LINER PACKAGE AND PLACE CORNER OF LINER INTO CORNER OF VAULT. WEIGH DOWN CORNER WITH A 10 POUND BAG OF STEEL SHOT.
8. MOVE LINER TRAY SOUTH ALONG VAULT EAST WALL WHILE UNFOLDING LINER KEEPING FOLDED EDGE OF LINER FLUSH TO WALL WHILE PLACING 4 MORE SHOT BAGS ON LINER EVENLY ALONG ITS LENGTH.
9. WHEN SOUTHEAST CORNER IS REACHED, FOLD LINER PACKAGE BACK ON ITSELF TO REMOVE REMAINING LINER OFF OF SHELF. REMOVE PORTABLE FLOOR CRANE FROM CORNER AND UNFOLD LINER INTO CORNER AND MOVE PORTABLE FLOOR CRANE TO SOUTHWEST (LADDER) CORNER OF VAULT.
10. REPEAT STEPS 4 THROUGH 9 FOR PLACING 101 LINER ASSEMBLY STARTING IN NORTHWEST CORNER.
11. WHEN THE SOUTHWEST CORNER IS REACHED, FOLD LINER PACKAGE BACK ONTO ITSELF (OFF SHELF) FOLD UP PORTABLE FLOOR CRANE AND REMOVE FROM VAULT THROUGH LADDER ACCESS SHAFT.
12. UNFOLD LAST PORTION OF 101 LINER HALF INTO CORNER.
13. POSITION A 3 FEET BY 5 FEET BY 3/8 INCH LEXAN PLASTIC PLANK TEMPORARILY ON TOP OF FOLDED LINER UNDER LADDER.
14. THROW ENDS OF LONG ROPES UNDER AND AROUND TANKS TO CENTER OF VAULT.
15. PULL TO UNFOLD OUTSIDE PORTIONS OF BOTH LINERS PAST ENDS OF TANKS TO CENTER OF VAULT.

    NOTE: REPOSITION LEXAN AT BOTTOM OF LADDER TO BE ON TOP OF REMAINING FOLDS OF LINER.
16. PULL TO UNFOLD CENTER PORTIONS OF BOTH LINERS UNDER TANKS WITH ROPES AND REMOVE ROPES. (DO NOT ALLOW LINER TO SLIP AWAY FROM WALL WHEN PULLING TO UNFOLD LINER. REPOSITION BAGS OF SHOT TO ASSIST.)
17. REMOVE TAPE RESTRAINING TANK SADDLE FLAP CORNERS OF LINERS AT TANK SADDLE FIELD JOINTS (8 PLACES).
18. ADJUST LINER ASSEMBLIES POSITIONS TO EQUALIZE SPACES AROUND TANK SADDLES. POSITION TANK SADDLE TOP LAYER OVERLAP OF EACH JOINT TOWARDS VAULT SUMP PER DWG 370864 AND ELIMINATE WRINKLES.
19. USING HOT AIR HEAT SEALING MACHINE, SEAL FIELD JOINTS CONNECTING LINERS AROUND TANK SADDLES. INSURE THAT TOP LAYER OF EACH JOINT OVERLAPS TOWARDS VAULT SUMP. CUT OFF HANDLING TABS (4 PLACES) AFTER COMPLETING JOINTS AND REMOVE FOR TESTING. ADHESIVE SEAL SADDLE FLAP JOINTS LEFT UNSEALED AT FACTORY TO COMPLETE SADDLE FLAP ATTACHMENT TO LINER (4 PLACES). PAINT (FLOOD) ALL EXPOSED SCRIM WITH ADHESIVE (DWG 370864, ITEM 10).
20. USING HOT AIR HEAT SEALING MACHINE SEAL JOINT BETWEEN 101 AND 102 LINER ASSEMBLIES. INSURE THAT 101 LINER OVERLAPS 4 INCHES ON TOP OF 102 LINER TOWARD SUMP. CUT OFF TEST TABS AFTER COMPLETING JOINT AND REMOVE FOR TESTING (2 PLACES).

    NOTE: WHEN USING HOT AIR HEAT SEALING MACHINE MARK THE LINER WHENEVER THE SEALING OPERATION IS INTERRUPED WITH ITEM 7.
21. ADHESIVE SEAL THE SUMP LINER INSERT TO LINER ASSEMBLY 102. PAINT (FLOOD) THE EDGES OF EXPOSED SCRIM WITH ADHESIVE EVERYWHERE TEST TABS HAVE BEEN REMOVED ON THE FLOOR PORTION OF THE LINER AND EVERYWHERE A HOT SEAM WAS INTERRUPTED. TEST TABS CUT FROM THE WALL SECTION NEED NOT BE PAINTED (FLOODED); THEY WILL BE SEALED LATER BY OTHER MEANS. ADHESIVE SEAL WELDED FLAP FROM THE TANK SADDLE TO THE ADHESIVE WELD BEING MADE AT THE WALL. THIS IS TO BE DONE AT BOTH ENDS. ADHESIVE FLOOD THE REMAINING WELD FLAP BETWEEN THE TANKS.

ATTACH LINER TO WALL

22. OBSERVE THAT THE DOUBLE CHALK LINES ON THE WALLS ARE STILL VISIBLE.

    TO FACILITATE ATTACHING THE VAULT LINER TO THE WALL A TEMPORARY HANGING SYSTEM HAS BEEN INSTALLED. OBSERVE THAT ROPES ARE STILL TIED TO THE LINER ALONG THE TOP EDGE. OBSERVE THAT STAINLESS STEEL HOOKS ARE POSITIONED ON THE WALL AT A HEIGHT OF 5'-6".
23. RAISE THE LINER WALL SECTIONS TO THE VERTICAL POSITION. START IN THE CORNER AT THE LADDER AND WORK ALONG EACH WALL HANGING THE ROPES ON THE HOOKS.
24. PLACE LEXAN PLANKS IN VAULT AND POSITION THEM AT THE BOTTOM OF THE LADDER AND BUTT THEM TOGETHER NEXT TO THE EXISTING PLANK PARALLEL TO THE WEST WALL WITH OUTER EDGE AGAINST TANK SADDLE.
25. REMOVE AND REPLACE WHEELS ON ALL PORTABLE SHIELDS THAT HAVE PREVIOUSLY BEEN IN THE VAULT WITH NEW CLEAN WHEELS. LOWER SHIELDS INTO THE VAULT AND SET UP ON THE LEXAN PLANKS. POSITION SHIELDS IN VAULT TO FACILITATE REMAINING INSTALLATION SEQUENCE.

    NOTE: THE PORTABLE SHIELDS MUST NOT BE PLACE DIRECTLY ON THE HYPALON LINER. LEXAN PLANKS WHICH HAVE BEEN DEBURRED MUST BE USED AT ALL TIMES.
26. LOWER TWO BATTEN STRIPS, TWO POLYURETHANE FOAM STRIPS, TWO COVERS, A CAULKING TUBE OF SILICONE, (DWG 370882) AND A PAIR OF SCISSORS INTO THE VAULT AND POSITION THESE ON THE LEXAN PLANKS.
27. ROLL THE POLYURETHANE FOAM STRIP AND STICK 12 TO 13 FEET ALONG THE WEST AND SOUTH WALLS STARTING IN THE SOUTHWEST CORNER. THE TOP OF THE TAPE SHOULD BE EVEN WITH THE LOWER CHALK LINE.
28. HOLD THE LINER AND BATTEN STRIP ASSEMBLY SNUG IN THE SOUTHWEST CORNER ON THE WEST WALL. SECURE IT WITH NAILS ON 12 INCH CENTERS. MARKINGS ON EACH STRIP WILL INDICATE WHERE NAILS GO. SECURE SECOND BATTEN STRIP BUTTED UP AGAINST THE PREVIOUS ONE ON THE SOUTH WALL.
29. TRIM LINER MATERIAL FLUSH WITH TOP OF BATTEN STRIP. POSITION COVERS STARTING IN CORNER AND SECURE THEM TO THE WALL WITH NAILS ON 4'0" CENTERS. MARKINGS ON EACH COVER WILL INDICATE WHERE NAILS GO.
30. BEAD CAULK (DWG 370882) ALONG THE TOP EDGE OF THE COVER, AROUND THE HEAD OF EACH OF ITS ATTACHMENT NAILS AND OVER THE SEAM IN THE CORNERS WHERE TWO COVERS BUTT TOGETHER.
31. REPOSITION THE PORTABLE SHIELD TO THE NORTHWEST CORNER USING LEXAN SHEETS. LOWER SUFFICIENT MATERIAL TO REPEAT STEPS 28 THROUGH 30.
32. REPEAT STEPS 26 THROUGH 30 ALONG THE WEST WALL. WHEN COMPLETE, REPEAT THE SEQUENCE TO MOVE ALONG TO THE SOUTHEAST CORNER, THEN THE SOUTH WALL. THE LAST CORNER (NORTHEAST), THE EAST WALL, THEN THE NORTH WALL.

REV.	REVISION DESCRIPTION		APPROVED DATE	UE&C	WINCO
1	ADDED NOTE 20		12/7/92	NDA	DLP
2	AS-BUILT				
3	INACTIVATED PER DCN 160559-AB22	TULLIS 10/4/95			

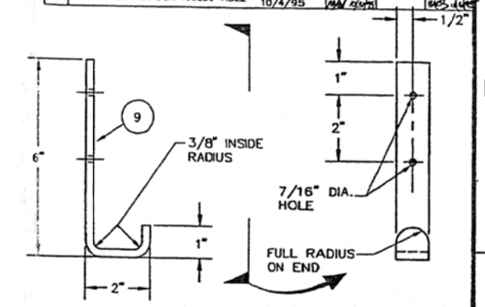

DETAIL 3 / 370864
SCALE: 6"=1'-0"

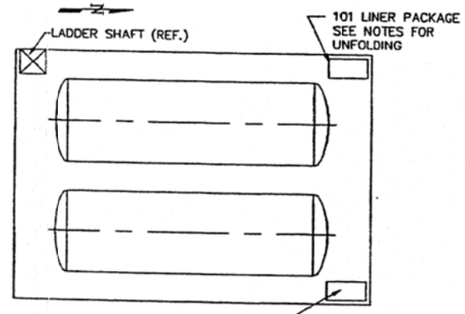

VAULT LINER PACKAGE PLACEMENT & UNFOLDING PLAN
SCALE: 1/8"=1'-0"

INACTIVE
FOR REF. USE ONLY
This Dwg. Superseded By:
Dwg. No. NONE
Date 10/4/95

GENERAL NOTES:

1) FOR ITEM DESCRIPTIONS SEE DWG. 370864.
2) CHAMFER EDGES 1/16" x 45°.
3) TESTING OF TABS REFERENCED IN THE INSTALLATION NOTES REQUIRE THAT 1" WIDE TABS BE PULLED TO DESTRUCTION. ACCEPTANCE OF SEAM WILL BE BASED ON MATERIAL FAILURE BY EXPOSURE OF SCRIM (REF. NSF 54 FOR BACKGROUND INFORMATION.)

TOLERANCES: UNLESS OTHERMISE SPECIFIED
.X ±.1
.XX ±.03
.XXX ±.005
FRACTIONS ± 1/16
ANGLES ± 1°

REFERENCE DRAWINGS	
	TITLE
370864	LINER INSTALLATION
370867	LINER FABRICATION
370868	LINER FABRICATION DETAILS
370866	LINER FOLDING PATTERN

A/E ENGINEER OF RECORD
DATE | APPROVED

DESIGN INTERFACE	INITIAL	DATE
PIPING		
MECHANICAL		
ELECTRICAL		
PROCESS		
STRUCTURAL		
ENVIRONMENTAL		
ARCHITECTURAL		
INSTRUMENTATION		

DRAWING STATUS		APPROVALS		DATE
DESIGN PHASE	DATE	ORIGINATOR		
APPROVED		CHECKER		
90%	9/1/92 DTC	RESPONSIBLE LOE		
		TASK MANAGER		
AFC	9/29/92 DTC	QA ENGINEER		
		CHIEF ENGINEER		
1		M&O PROJECT MGR.	NA	9/30/92
		M&O PROJECT MGR.	DLP	9/30/92
		PROJECT NO. 9354.152		
		SUBCONTRACT NO. 5292031		
QUALITY LEVEL II		ISSUED FOR CONSTRUCTION AFC 9/29/92 DTC		

United Engineers & Constructors
A Raytheon Company
Western Operations
FOR
US DEPARTMENT OF ENERGY
IDAHO OPERATIONS OFFICE
IDAHO FALLS, IDAHO

ICPP BLDG. 604
WL-101/102 VAULT PROJECT
VAULT LINER - INSTALLATION NOTES & DETAILS

SIZE	INDEX CODE NUMBER: AREA	SYSTEM	SEQ. NO.	DRAWING NO.	REV.
D	200	0604	61 812	370865	3

SCALE: AS NOTED | SPEC CODE 027/8 | A/E SHEET NO.

WL 370865 3

INFORMATION ONLY

CAD NO. C2920573.DWG
A1 SCALE 1"=8"
REV. 1 2 3 4 5 6 7 8 9 10 11 12 13
FROM 9354.152-D1
10/25/92 15:38

EDC

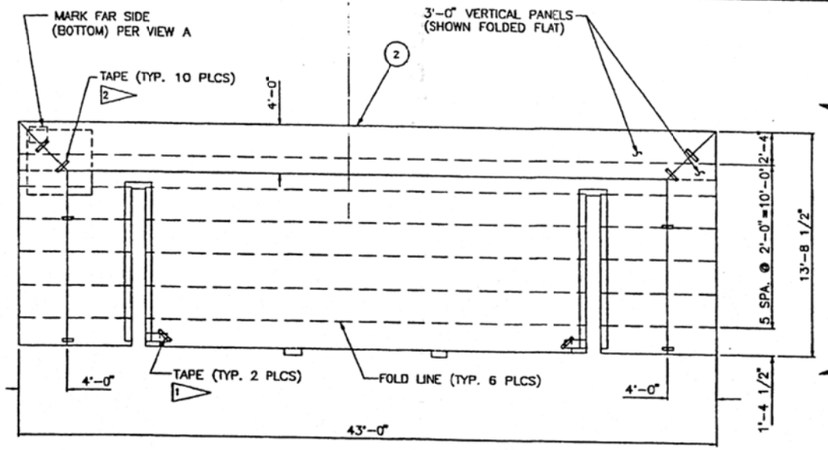

PLAN VIEW 101 VAULT LINER
SHOWING FIRST FOLDING LINES
NOT TO SCALE

VIEW SHOWING FIRST
ACCORDIAN FOLD

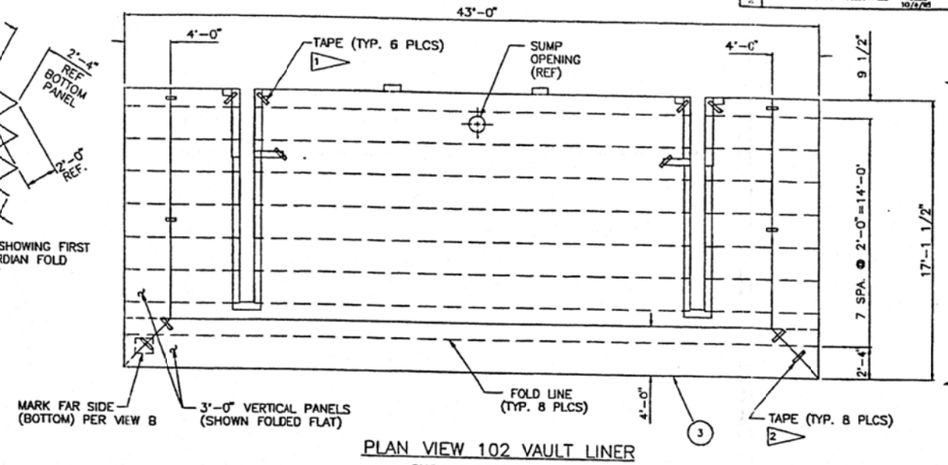

PLAN VIEW 102 VAULT LINER
SHOWING FIRST FOLDING LINES
NOT TO SCALE

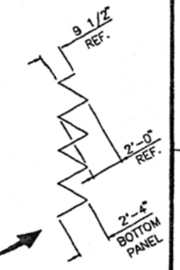

VIEW SHOWING FIRST
ACCORDIAN FOLD

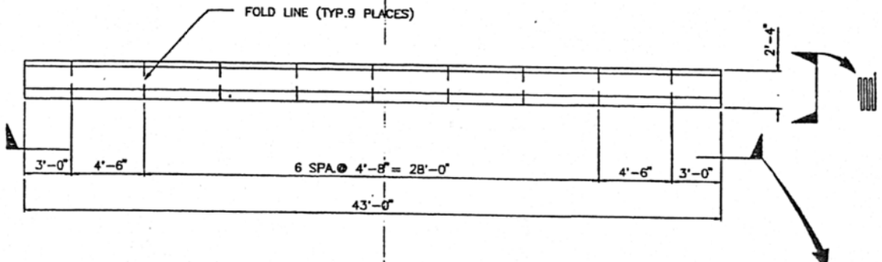

PLAN VIEW 101 VAULT LINER
AFTER FIRST FOLDING &
SHOWING SECOND FOLDING LINES

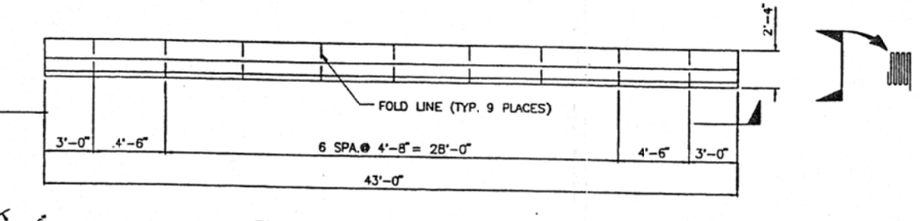

PLAN VIEW 102 VAULT LINER
AFTER FIRST FOLDING &
SHOWING SECOND FOLDING LINES

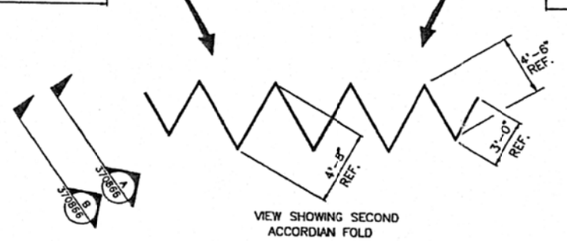

VIEW SHOWING SECOND
ACCORDIAN FOLD

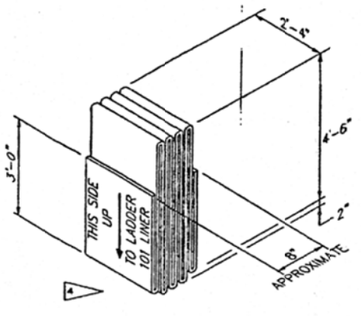

VIEW
FINAL FOLDING PACKAGE FOR 101 LINER 370866
(AFTER ACCORDIAN FOLD)
NOT TO SCALE

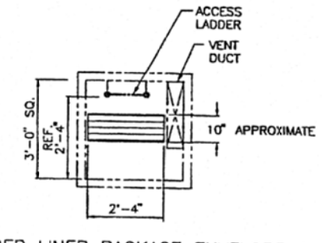

FOLDED LINER PACKAGE ENVELOPE &
LADDER SHAFT CLEARANCE PLAN
SCALE: 1/2" = 1'-0"
FOR REFERENCE ONLY. SEE DRAWING 370859

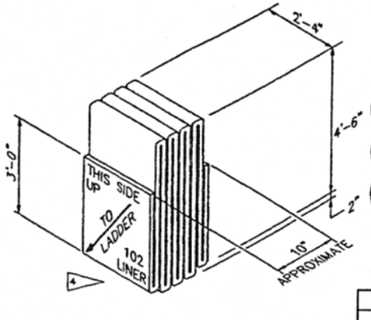

VIEW
FINAL FOLDING PACKAGE FOR 102 LINER 370866
(AFTER ACCORDIAN FOLD)
NOT TO SCALE

NOTES:

1. TEMPORARILY TAPE (WITH ITEM 5) TO HOLD FIELD JOINT FLAPS OPEN TO PREVENT DAMAGE DURING UNFOLDING IN FIELD.
2. FOLD DOWN VERTICAL CORNERS AND TEMPORARILY TAPE (WITH ITEM 5) TO PREVENT DAMAGE DURING UNFOLDING IN FIELD.
3. FOR ITEM DESCRIPTIONS SEE DRAWING NO. 370864.
4. LETTER WITH SILVER INK (ITEM 7). MARK IN 3" HIGH LETTERS. ORIENTATION MARKING VISABLE ON TOP OF FOLDED PACKAGE.

INACTIVE
FOR REF. USE ONLY
This Dwg. Superseded By:
Dwg. No. NONE
Date 10/4/95

REFERENCE DRAWINGS	
DWG. NO.	TITLE
370867	LINER-FABRICATION
370868	LINER-FAB DETS
370864	LINER-INSTALLATION
370865	LINER-INST. NOTES
A/E ENGINEER OF RECORD	
DATE	APPROVED

REV.	REVISION DESCRIPTION	APPROVED DATE	UE&C	WINCO
1	AS-BUILT			
2	INACTIVATED PER DCN 180536-A823 TULUS 10/4/95			

DESIGN INTERFACE	INITIAL	DATE
PIPING		
MECHANICAL		
ELECTRICAL		
PROCESS		
STRUCTURAL		
ENVIRONMENTAL		
ARCHITECTURAL		
INSTRUMENTATION		

DRAWING STATUS		APPROVALS		DATE
DESIGN PHASE	DATE APPROVED	ORIGINATOR		
90%	8/1/95 BJC	CHECKER		
AFC	9/29/95 BJC	RESPONSIBLE LDR		
		TASK MANAGER		
		QA ENGINEER		
		CHIEF ENGINEER		
		LE&C PROJECT MGR.	MA	9/30/95
		M&O PROJECT MGR.	DLP	9/30/95
QUALITY LEVEL II		PROJECT NO. 2354.152		
		SUBCONTRACT NO. 5297331		
		ISSUED FOR CONSTRUCTION		

United Engineers & Constructors
A Raytheon Company
Western Operations
FOR
US DEPARTMENT OF ENERGY
IDAHO OPERATIONS OFFICE
IDAHO FALLS, IDAHO

ICPP BLDG. 604

WL-101/102 VAULT PROJECT
VAULT LINER
FOLDING PATTERN

SIZE	AREA	SYSTEM TYPE	SEQ.	DWG.	DRAWING NO.	REV.
D	200	0604	61	812	370866	2

SCALE 1/4"=1'-0" SPEC. CODE 02778 A/E SHEET NO.

WL

370866 2

CAD NO. CD9000A-SVG
PLOT SCALE 1 = 48

PEN: 1 2 3 4 5 6 7 8 9 10 11 12 13 14 15
PRIM: 5 4 5 5 5 7 5 5 5 1 1 3 3 3 3

FORM 008-01

INFORMATION ONLY

EDC

REV.	REVISION DESCRIPTION	APPROVED		
		DATE	UE&C	WINCO
1	ADDED DETAIL 6	12/7/92	NDA	DLP
2	AS-BUILT	4/6/94		

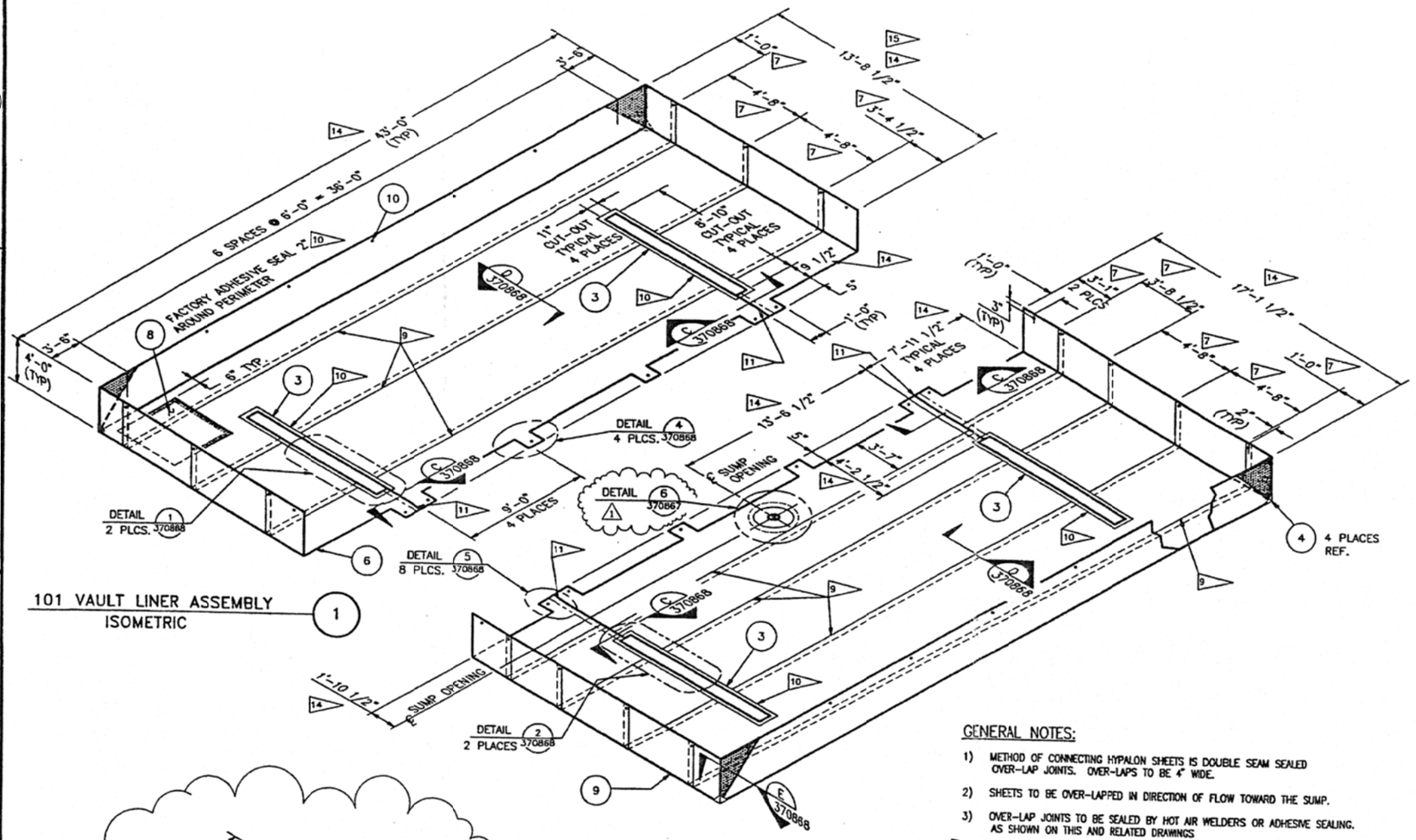

101 VAULT LINER ASSEMBLY (1)
ISOMETRIC

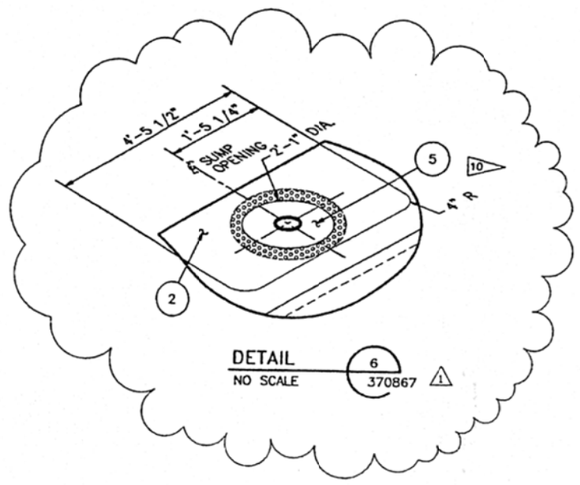

DETAIL 6 (370867) ⚠1
NO SCALE

102 VAULT LINER ASSEMBLY (2)
ISOMETRIC

INFORMATION ONLY

ITEM NO.	DESCRIPTION	PART NO.	Q/A
1	101 LINER ASSY	370867-1	1
2	102 LINER ASSY	370867-2	1
3	SADDLE FLAP HYPALON – 1'-8 1/2" WIDE X 9'-7 1/2" LG – REINFORCED		4
4	CORNER REINFORCEMENT HYPALON – 12" X 12" NO REINFORCING SCRIM		4
5	SUMP LINER INSERT HYPALON – 33" X 33" NO REINFORCING	370867-5	1
16 6	HYPALON – 60" NOMINAL WIDTH, REINFORCED.		205 LN. FT.
7	SADDLE FLAP CLOSURE STRIP PER HYPALON – 4" X 4 3/4" REINFORCED		4
8	LADDER LANDING PAD PER HYPALON – 48" X 48" REINFORCED		1
16 9	HYPALON – 60" NOMINAL WIDTH, REINFORCED.		255 LN. FT.
10	5/8" I.D. NICKEL PLATED BRASS GROMMET McMASTER-CARR 86625K17 OR APPROVED EQUIVALENT		35
11	FLASHING, 20 GA 1'-7" X 1'-11" ASTM A569	370867-11	1
12	VALVE, 1/8" SCHRADER TANK VALVE # 9166L-8 OR APPROVED EQUIVALENT		4
13	NUT, 1/8" PIPE LOCKNUT McMASTER-CARR 4429K121 OR APPROVED EQUIVALENT		4
14	WASHER, 1" O.D. X 7/16" I.D. McMASTER CARR 91081A031 OR APPROVED EQUIVALENT		8
15	ADHESIVE, (HYPALON DISSOLVED IN SOLVENT		2 GAL.
16			

GENERAL NOTES:

1) METHOD OF CONNECTING HYPALON SHEETS IS DOUBLE SEAM SEALED OVER-LAP JOINTS. OVER-LAPS TO BE 4" WIDE.
2) SHEETS TO BE OVER-LAPPED IN DIRECTION OF FLOW TOWARD THE SUMP.
3) OVER-LAP JOINTS TO BE SEALED BY HOT AIR WELDERS OR ADHESIVE SEALING, AS SHOWN ON THIS AND RELATED DRAWINGS
4) SADDLE FLAPS TO BE ATTACHED TO ITEMS 1 & 2, THEN TESTED PRIOR TO COMPLETION OF CUT-OUTS.
5) EDGES OF EXPOSED SCRIM TO BE PAINTED (FLOODED) WITH ADHESIVE (ITEM 15).
6) SECTION VIEWS ARE NOT TO SCALE.
7) THESE DIMENSIONS ARE NOMINAL FOR 5'-0" ROLL STOCK MATERIAL WIDTH.
8) SADDLE FLAP CLOSURE STRIP (ITEM 7) SHALL BE FACTORY ATTACHED TO SADDLE FLAP ON ONE SIDE OF CUT LINE ONLY.
9) FACTORY HEAT SEAL JOINT
10) FACTORY ADHESIVE SEAL JOINT
11) FIELD JOINT
12) THE TWO LINER HALF ASSEMBLIES (ITEMS 1 & 2) WILL BE JOINED IN THE FIELD. ALL REFERENCES TO FIELD ON THIS DRAWING REFER TO THAT WORK.
13) TEST ALL SEALED JOINTS PER SPECIFICATION 02778.
14) THESE DIMENSIONS SHALL BE ADJUSTED AS REQUIRED TO CONFORM TO FIELD MEASUREMENTS PER DRAWING 370917.
15) THIS DIMENSION INCLUDES A 4" ALLOWANCE FOR OVERLAP.
16) QUANTITIES MAY VARY – FABRICATOR TO VERIFY.

TOLERANCES: UNLESS OTHERWISE SPECIFIED

FRACTIONS ± 1/4"
ANGLES ± 1°

CONTROLLED DOCUMENT CLASS 1

REFERENCE DRAWINGS	
DWG. NO.	TITLE
370868	LINER-FAB DETS
370866	LINER-FOLDING PATTERN
370864	LINER-INSTALLATION
370865	LINER-INSTAL. NOTES

A/E ENGINEER OF RECORD — DATE — APPROVED

DESIGN INTERFACE	INITIAL	DATE
PIPING		
MECHANICAL		
ELECTRICAL		
PROCESS		
STRUCTURAL		
ENVIRONMENTAL		
ARCHITECTURAL		
INSTRUMENTATION		

DRAWING STATUS	DATE
DESIGN PHASE	APPROVED
50%	9/1/92 DTC
AFC	9/30/92 DTC
1	

APPROVALS		DATE
ORIGINATOR		
CHECKER		
RESPONSIBLE LDE		
TASK MANAGER		
QA ENGINEER		
CHIEF ENGINEER		
UE&C PROJECT MGR.	NA	9/30/92
M&O PROJECT MGR.	DLP	9/30/92

PROJECT NO. 9354.152
SUBCONTRACT NO. 5292031
QUALITY LEVEL II
ISSUED FOR CONSTRUCTION AFC 9/30/92 DTC

United Engineers & Constructors — Western Operations
FOR US DEPARTMENT OF ENERGY IDAHO OPERATIONS OFFICE IDAHO FALLS, IDAHO

ICPP BLDG. 604
WL-101/102 VAULT PROJECT
VAULT LINER FABRICATION

SIZE	UNDER CODE NUMBER				DRAWING NO.	REV.
	AMPA	ENG. TYPE	CL.	DRWG		
D	200	0604	61	812	370867	2

SCALE NO SCALE — SPEC. SECTION 02778 — A/E SHEET NO.

WL 370867 2

CAD NO. C2900370.DWG
A1 SCALE 1" = 48"
11/30/92 CLT
FORM 888-0.

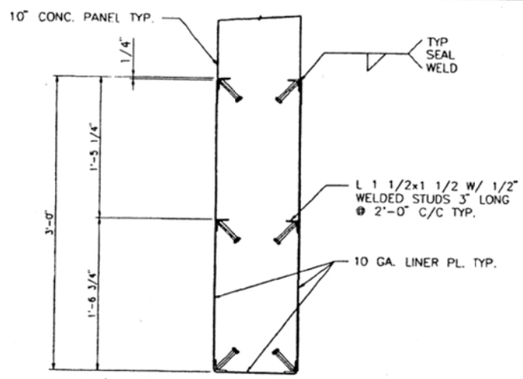

SECTION — SCALE: 1 1/2"=1'-0" — R — S-8.5-9.5-10

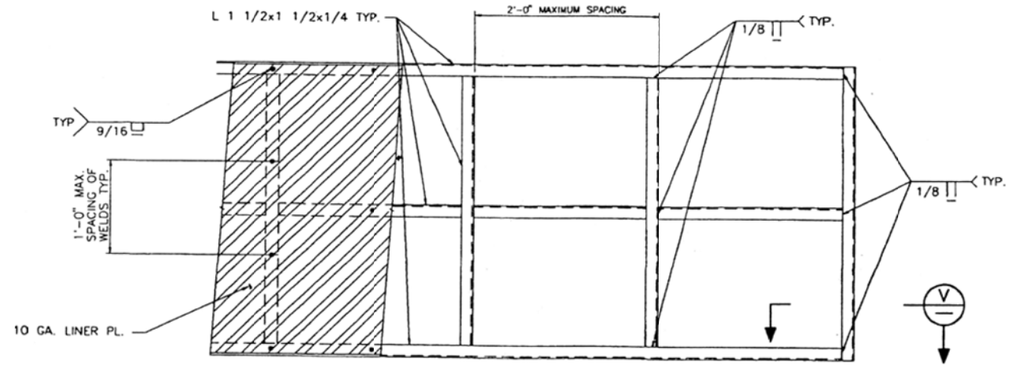

DETAIL — SCALE: 1 1/2"=1'-0" — 18 — S-8.5-9.5-10

NOTES:

1. SEE SHEET S-1 FOR GENERAL NOTES.

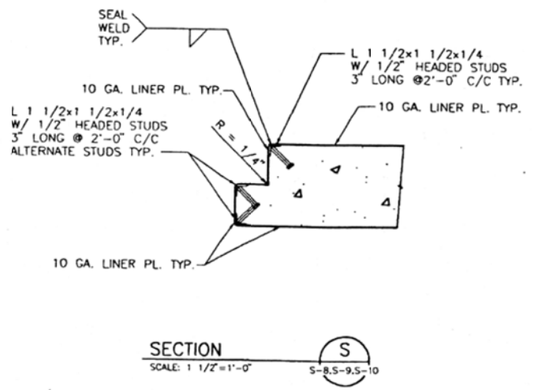

SECTION — SCALE: 1 1/2"=1'-0" — S — S-8.5-9.5-10

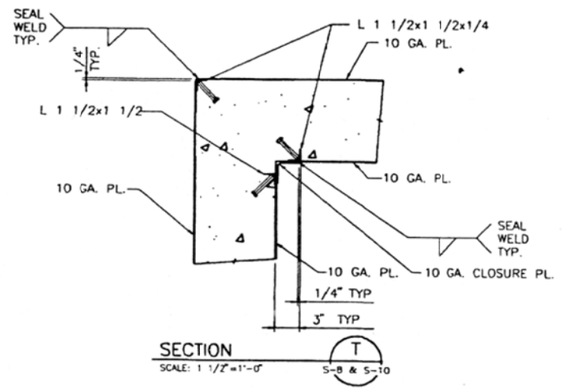

SECTION — SCALE: 1 1/2"=1'-0" — T — S-8 & S-10

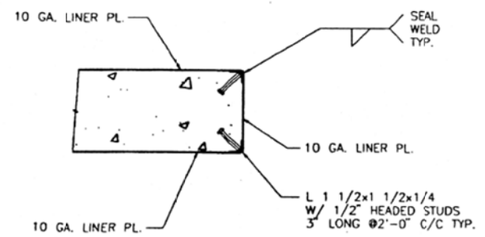

SECTION — SCALE: 1 1/2"=1'-0" — U — S-8.5-9.5-10

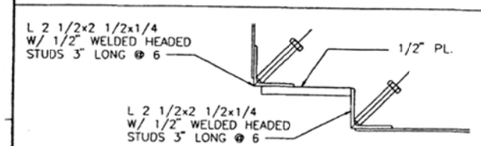

NOTCH AT OPENING

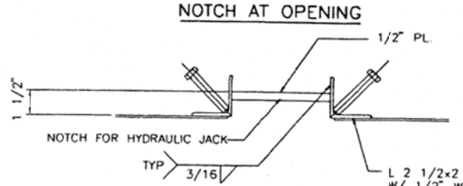

SUBCONTRACTOR SHALL FURNISH HYDRAULIC JACK MODEL 2921T12, CYLINDER AND PUMP ASSEMBLY 2897T14 AS SHOWN IN McMASTER-CARR CATALOG OR EQUAL FOR FINAL SHIMMING AS REQUIRED.

DETAIL — SCALE: 3"=1'-0" — 17 — S-8.5-9

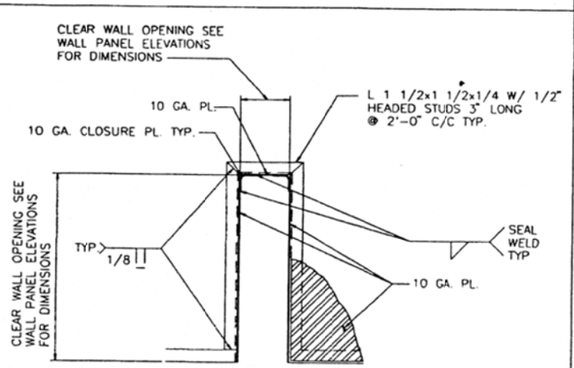

DETAIL — SCALE: 1 1/2"=1'-0" — 19 — S-8 & S-10

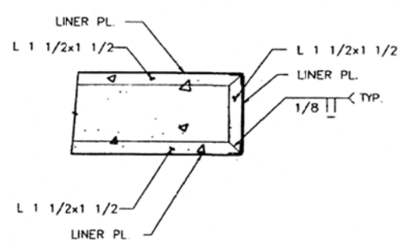

SECTION — SCALE: 1 1/2"=1'-0" — V

CONTROLLED CLASS 1 DOCUMENT

APPROVED FOR CONSTRUCTION

FOR DRAWING INDEX SEE DRAWING NO. 347320 (T-1)

2	4/30/96	AS BUILT PER DCN FPFU-12-000-1	DJF
1	2/23/94	REVISED PER DCN FPFU-12-048	MJF
△	DATE	REVISION DESCRIPTION	APP.

FLUOR DANIEL

FOR WESTINGHOUSE IDAHO NUCLEAR COMPANY

IDAHO FALLS, IDAHO

WINCO SUBCONTRACT 227264 — FLUOR DANIEL CONTRACT 566205

CPP — BUILDING 659

HIGH LEVEL LIQUID WASTE EVAPORATOR SECTIONS AND DETAILS STAINLESS STEEL LINER PLATE

DRAWN BY: W.I. ERTLE	DATE: 2/24/94	SUPERVISOR: E.R. HANINGER	DATE: 2/24/94
CHECKED BY: M.S. FU	DATE: 2/24/94	PROJECTENGR: S. MARCHETTI	DATE: 2/25/94
PLOTTED BY: W.I. ERTLE	DATE: 2/24/94	CLOSE: M.L. NELSON	DATE: 2/25/94

SIZE	PROJECT CODE NUMBER (AREA / DWG TYPE / CL / DWG)	DRAWING NO.	REV.
D	2 3 0 0 6 5 9 6 0 2 8 7	383716	2

SCALE	SPEC CODE	SDW/ WBS #	A/E SHEET NO.
NCC 1 1/2"=1'-0"		86-40	S-17

ACAD FILE NAME: D0383716

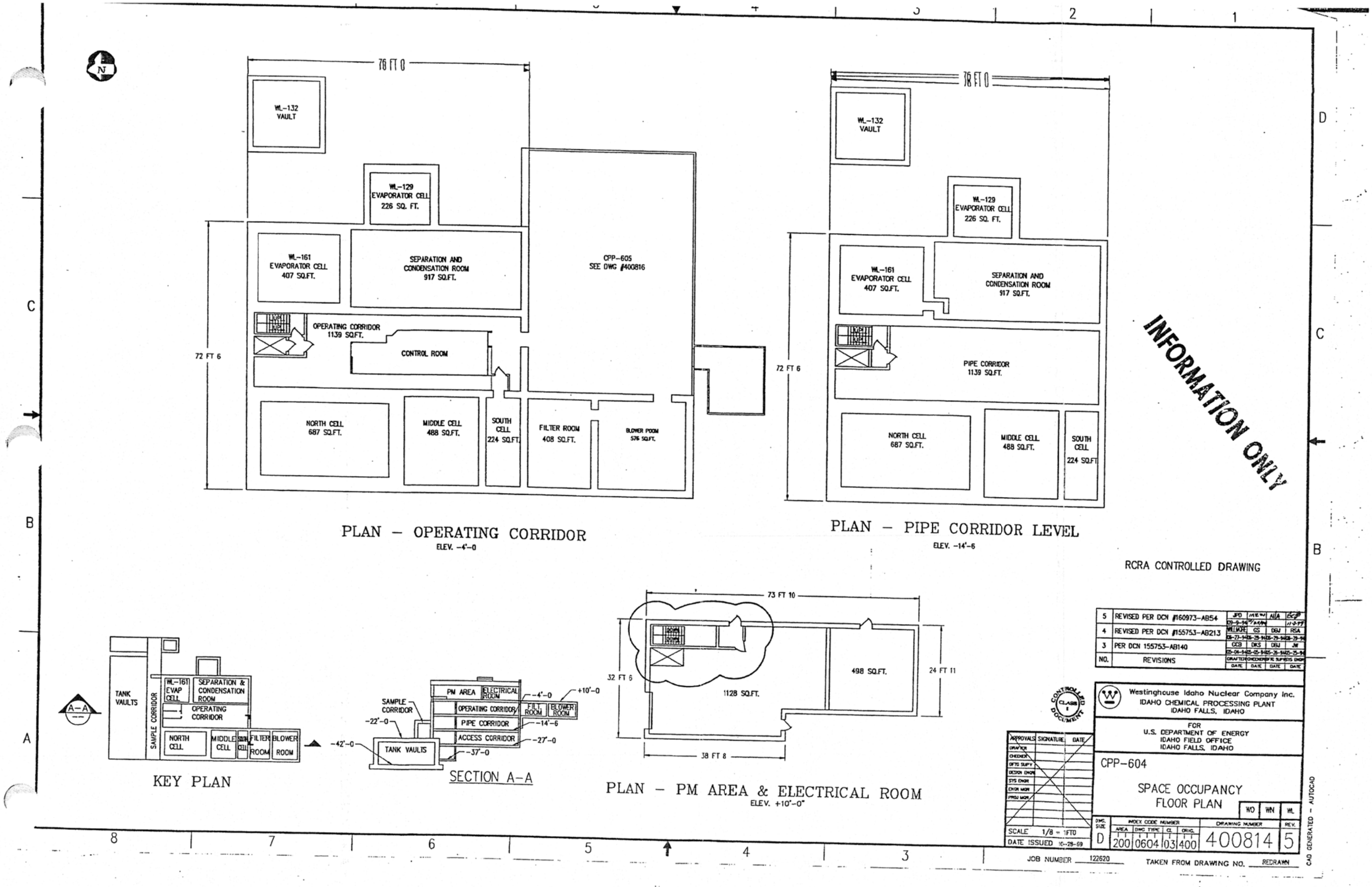

NO.	REVISIONS	DRAFTER DATE	CHECKER DATE	DFTG SUPV DATE	SYS ENGR DATE
5	REVISED PER DCN #160973-AB54	JPD 09-9-94	MEW 11/8/94	N/A	[illegible] 11-9-94
4	REVISED PER DCN #155753-AB213	WILLMORE 06-27-94	GS 06-29-94	DBJ 06-29-94	RSA 06-29-94
3	PER DCN 155753-AB140	CCB 05-04-94	DKS 05-05-94	DBJ 05-26-94	JW 05-25-94

CONTROLLED DOCUMENT CLASS I

Westinghouse Idaho Nuclear Company Inc.
IDAHO CHEMICAL PROCESSING PLANT
IDAHO FALLS, IDAHO

FOR
U.S. DEPARTMENT OF ENERGY
IDAHO FIELD OFFICE
IDAHO FALLS, IDAHO

APPROVALS	SIGNATURE	DATE
DRAFTER		
CHECKER		
DFTG SUPV		
DESIGN ENGR		
SYS ENGR		
ENGR MGR		
PROJ MGR		

CPP-604

SPACE OCCUPANCY FLOOR PLAN

WO | WN | WL

SCALE 1/8 = 1FT0
DATE ISSUED 10-28-69

DWG. SIZE	INDEX CODE NUMBER: AREA	DWG TYPE	CL	ORIG.	DRAWING NUMBER	REV.
D	200	0604	03	400	400814	5

JOB NUMBER 122620

TAKEN FROM DRAWING NO. REDRAWN

CAD GENERATED – AUTOCAD

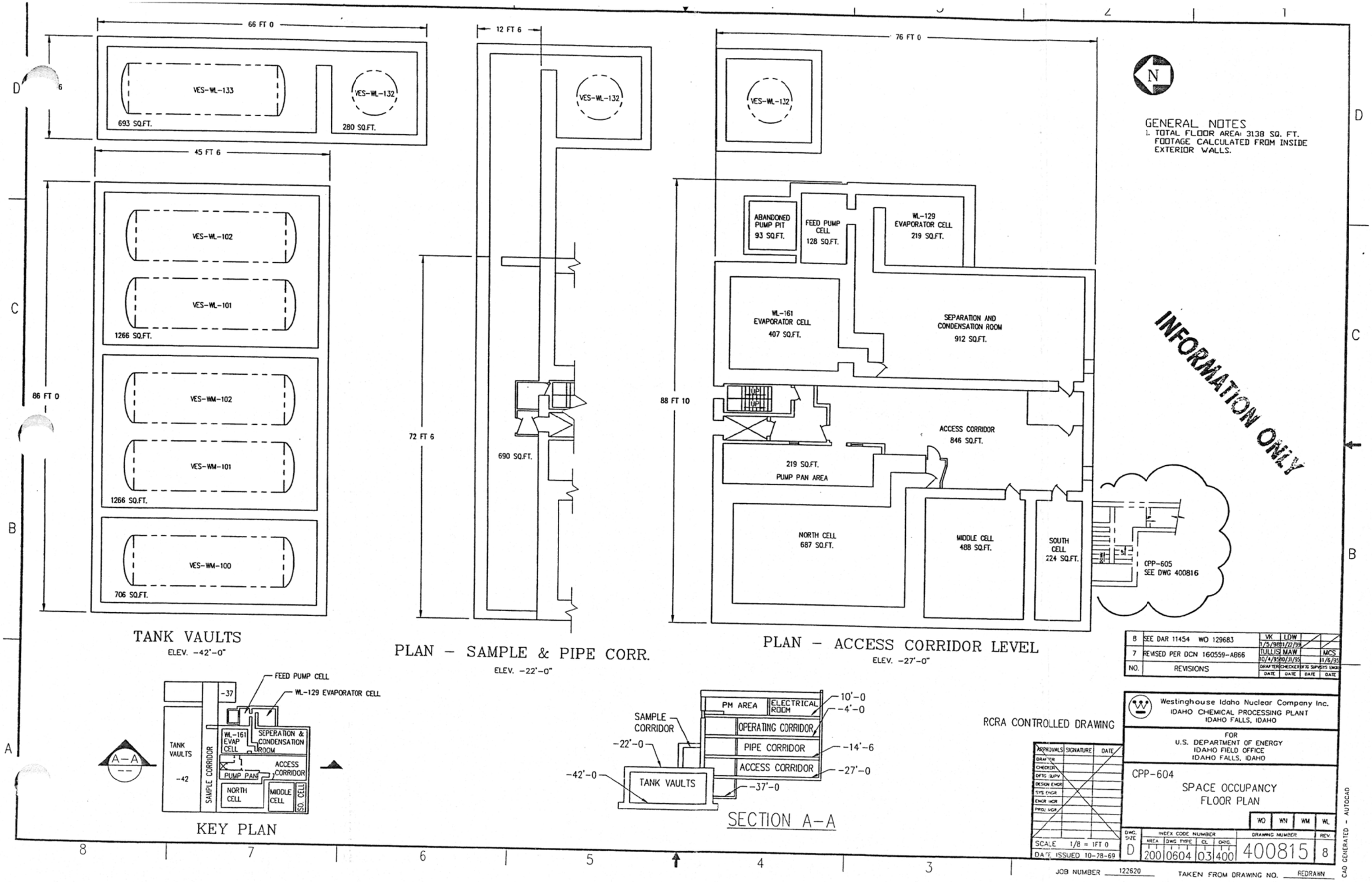
66 FT 0
VES-WL-133
693 SQ.FT.
VES-WL-132
280 SQ.FT.
45 FT 6
VES-WL-102
VES-WL-101
1266 SQ.FT.
VES-WM-102
VES-WM-101
1266 SQ.FT.
VES-WM-100
706 SQ.FT.
86 FT 0
TANK VAULTS
ELEV. -42'-0"
12 FT 6
VES-WL-132
690 SQ.FT.
72 FT 6
PLAN - SAMPLE & PIPE CORR.
ELEV. -22'-0"
76 FT 0
VES-WL-132
ABANDONED PUMP PIT
93 SQ.FT.
FEED PUMP CELL
128 SQ.FT.
WL-129 EVAPORATOR CELL
219 SQ.FT.
WL-161 EVAPORATOR CELL
407 SQ.FT.
SEPARATION AND CONDENSATION ROOM
912 SQ.FT.
88 FT 10
ACCESS CORRIDOR
846 SQ.FT.
219 SQ.FT.
PUMP PAN AREA
NORTH CELL
687 SQ.FT.
MIDDLE CELL
488 SQ.FT.
SOUTH CELL
224 SQ.FT.
CPP-605
SEE DWG 400816
PLAN - ACCESS CORRIDOR LEVEL
ELEV. -27'-0"
N
GENERAL NOTES
1. TOTAL FLOOR AREA: 3138 SQ. FT. FOOTAGE CALCULATED FROM INSIDE EXTERIOR WALLS.
INFORMATION ONLY
FEED PUMP CELL
WL-129 EVAPORATOR CELL
-37
TANK VAULTS
-42
SAMPLE CORRIDOR
WL-161 EVAP CELL
SEPERATION & CONDENSATION ROOM
ACCESS CORRIDOR
PUMP PAN
NORTH CELL
MIDDLE CELL
SO. CELL
A-A
KEY PLAN
PM AREA
ELECTRICAL ROOM
OPERATING CORRIDOR
PIPE CORRIDOR
ACCESS CORRIDOR
SAMPLE CORRIDOR
TANK VAULTS
10'-0
-4'-0
-14'-6
-27'-0
-22'-0
-42'-0
-37'-0
SECTION A-A
RCRA CONTROLLED DRAWING
APPROVALS SIGNATURE DATE
DRAFTER
CHECKER
DFTG SUPV
DESIGN ENGR
SYS ENGR
ENGR MGR
PROJ MGR
SCALE 1/8 = 1FT 0
DATE ISSUED 10-28-69
8 SEE DAR 11454 WO 129683 VK LDW 1/5/98 1/27/98
7 REVISED PER DCN 160559-AB66 TULLIS MAW 10/4/95 10/31/95 MCS 11/6/95
NO. REVISIONS DRAFTER DATE CHECKER DATE PROJ SUPV DATE ENGR DATE
Westinghouse Idaho Nuclear Company Inc.
IDAHO CHEMICAL PROCESSING PLANT
IDAHO FALLS, IDAHO
FOR
U.S. DEPARTMENT OF ENERGY
IDAHO FIELD OFFICE
IDAHO FALLS, IDAHO
CPP-604
SPACE OCCUPANCY
FLOOR PLAN
WO WN WM WL
DWG. SIZE D
INDEX CODE NUMBER AREA 200 DWG TYPE 0604 CL 03 ORIG 400
DRAWING NUMBER 400815
REV. 8
JOB NUMBER 122620
TAKEN FROM DRAWING NO. REDRAWN
CAD GENERATED - AUTOCAD

CONCRETE GENERAL NOTES

1. CONCRETE:
   - 1.1 ALL CONCRETE SHALL BE DESIGNED AND PLACED IN ACCORDANCE WITH PROJECT SPECIFICATIONS AND IN CONFORMANCE WITH THE ACI BUILDING CODE (ACI-318-02)
   - 1.2 TYPE II CEMENT SHALL BE USED THROUGHOUT UNLESS OTHERWISE NOTED.
   - 1.3 COARSE AGGREGATE SHALL BE A MAXIMUM OF 1 1/2" IN SIZE FOR LARGE BLOCKS AND MATS AND A MAXIMUM OF 3/4" IN SIZE FOR ALL OTHER STRUCTURES.
   - 1.4 COMPRESSIVE STRENGTH OF CONCRETE SHALL BE CLASS BSA. 4000 psi AT 28 DAYS UNLESS NOTED OTHERWISE ON THE DRAWINGS. (SEE PROJECT SPECIFICATION 03330 FOR CONCRETE CLASSIFICATIONS)
   - 1.5 AIR ENTRAINING ADMIXTURES CONFORMING TO ASTM C260 SHALL BE USED IN ALL CONCRETE UNLESS NOTED.
   - 1.6 ALL DAMAGED CONCRETE SHALL BE REPLACED AS INSTRUCTED BY THE BUYER.
   - 1.7 SHIELDING CONCRETE FOR PLUGS, DOORS, AND OTHER ELEMENTS USED FOR SHIELDING SHALL BE BS OR OR BPG 4.000 PSI SELF-CONSOLIDATING CONCRETE WITH SLUMP > 10". SEE SPECIFICATION 03330 FOR DENSITY REQUIREMENTS.
2. REINFORCING:
   - 2.1 UNLESS OTHERWISE NOTED ON THE DRAWINGS ALL REINFORCING BARS SHALL BE NEW, DEFORMED BILLET STEEL BARS CONFORMING TO ASTM A706.
   - 2.2 WELDED PLAIN WIRE FABRIC (WWF) SHALL MEET THE REQUIREMENTS OF ASTM A185.
   - 2.3 WELDED DEFORMED WIRE FABRIC SHALL MEET THE REQUIREMENTS OF ASTM A497
   - 2.4 UNLESS OTHERWISE APPROVED BY THE BUYER, BAR SUPPORTS SHALL BE:
     - 2.4.1 PRECAST CONCRETE BLOCKS WHEN CONCRETE IS CAST ON GRADE
     - 2.4.2 CRSI CLASS 3-NO PROTECTION, BRIGHT BASIC WHERE CONCRETE WILL NOT BE EXPOSED TO VIEW UNLESS OTHERWISE NOTED ON THE DRAWINGS.
     - 2.4.3 CRSI CLASS 1-MAXIMUM PROTECTION, PLASTIC COATED WHERE CONCRETE WILL BE EXPOSED TO VIEW OR IN A CORROSIVE ENVIRONMENT, UNLESS OTHERWISE NOTED ON THE DRAWINGS.
3. JOINT FILLER AND SEALANT:
   - 3.1 SEALANT INFORMATION OUTLINED BELOW IN ITEMS 3.2 THROUGH 3.6 IS FOR RAD ZONE I ONLY, PER SPECIFICATION 03330
     SEE ROOM FINISH SCHEDULE ON ARCH DWG 632435 FOR RAD ZONE I AND II DESIGNATED AREAS.
     FOR SEALANT INFORMATION IN AREAS DESIGNATED RAD ZONE II, SEE SPECIFICATION 09960.
   - 3.2 JOINT FILLER SHALL BE OF THE PREFORMED BITUMINOUS TYPE, CONFORMING TO ASTM D1751, SIZE AS NOTED ON THE DRAWINGS.
   - 3.3 JOINT SEALANT SHALL CONFORM TO ASTM C920,TYPE S, ONE PART POLYURETHANE ELASTOMERIC JOINT SEALANT. SEALANT SHALL BE GRADE P SELF-LEVELING, POUR GRADE FOR HORIZONTAL JOINTS AND GRADE NS NON-SAG, GUN GRADE FOR VERTICAL OR OVERHEAD JOINTS.
   - 3.4 CONCRETE EDGES THAT ARE TO RECEIVE JOINT SEALANT SHALL BE PLACED AGAINST NON-OILED FORMS. THE NON-OILED PORTION SHALL EXTEND A MINIMUM OF 2 1/2" FROM THE EDGE TO BE SEALED.
   - 3.5 JOINTS RECEIVING SEALANT SHALL FIRST BE COATED WITH PRIMER IF REQUIRED BY THE SEALANT MANUFACTURER. JOINT PREPARATION AND APPLICATION OF PRIMER AND SEALANT SHALL BE IN ACCORDANCE WITH MANUFACTURER'S INSTRUCTIONS.
   - 3.5 BACKING ROD SHALL BE ROUND, PREFORMED, RESILIENT MATERIAL CONFORMING TO ASTM D 5249, TYPE 1, FOR USE WITH COLD-AND HOT-APPLIED SEALANTS OR TYPE 3, FOR USE WITH COLD-APPLIED SEALANTS. THE DIAMETER SHALL NOT BE LESS THAN ONE AND ONE-HALF (1 1/2) TIMES THE WIDTH OF THE JOINT IN WHICH IT IS INSTALLED.
4. EXPANSION, CONSTRUCTION AND CONTROL JOINTS:
   - 4.1 EXPANSION, CONSTRUCTION AND CONTROL JOINTS SHALL BE PROVIDED IN ACCORDANCE WITH STANDARD DETAILS AND AS LOCATED OR DETAILED ON THE DRAWINGS. ANY OTHERS DEEMED NECESSARY SHALL BE APPROVED BY THE BUYER.
   - 4.2 FIELD LOCATED CONSTRUCTION JOINTS SHALL BE LOCATED PER THE PROJECT SPECIFICATION.
5. CONCRETE PROTECTION FOR REINFORCEMENT:
   - 5.1 MINIMUM CLEAR DISTANCE BETWEEN FACE OF CAST IN PLACE CONCRETE AND OUTSIDE OF BAR SHALL BE AS FOLLOWS, UNLESS NOTED:
     - 5.1.1 CONCRETE SURFACES EXPOSED TO WEATHER OR IN CONTACT WITH EARTH AFTER REMOVAL OF FORMS: 1 1/2" FOR #5 BARS AND SMALLER, 2" FOR #6 BARS AND LARGER.
     - 5.1.2 CONCRETE DEPOSITED AGAINST EARTH OR VOID FORMS: 3".
     - 5.1.3 CONCRETE SURFACES NOT EXPOSED DIRECTLY TO WEATHER OR IN CONTACT WITH EARTH:
       - 5.1.3.1 SLABS, WALLS, JOISTS: #11 REBAR OR SMALLER,?"; #14 AND LARGER, 1 1/2".
       - 5.1.3.2 BEAMS, GIRDERS, COLUMNS: PRIMARY REINFORCEMENT, TIES, STIRRUPS OR SPIRALS, 1 1/2".
     - 5.1.4 FOR CLEARANCES NOT LISTED, SEE ACI 318, SECTION 7.7.
   - 5.2 EXPOSED REINFORCING BARS, INSERTS, AND PLATES INTENDED FOR FUTURE BONDING SHALL BE PROTECTED AGAINST CORROSION.
6. SPLICES, GENERAL:
   - 6.1 LAPPED SPLICES OF REINFORCEMENT AND WELDED WIRE FABRIC SHALL BE LOCATED AS REQUIRED OR PERMITTED ON THE DESIGN DRAWINGS.
   - 6.2 SPLICES NOT DEFINED ON THE DRAWING SHALL BE LAPPED IN ACCORDANCE WITH ACI 318, CHAPTER 12 CLASS B, TOP BAR.
   - 6.3 WELDING OR TACK-WELDING OF REINFORCING IS PROHIBITED UNLESS NOTED ON THE DRAWINGS.
7. DETAILS:
   - 7.1 EXTERNAL CORNERS AND EDGES OF CONCRETE ABOVE FINISHED GRADE SHALL BE FORMED OR TROWELED TO A 3/4" CHAMFER, UNLESS OTHERWISE NOTED ON THE DRAWINGS.
   - 7.2 ALL ANCHOR BOLT GROUPS SHALL BE SUPPORTED AND SET BY USING A TEMPLATE WITH THE EMBEDDED ENDS SECURELY TIED TO PREVENT DISPLACEMENT DURING PLACEMENT OF THE CONCRETE. FIELD TACK WELDING OF REINFORCING, PIPE SLEEVES, ETC., TO ANCHOR BOLTS IS PROHIBITED.
   - 7.3 BEFORE PLACING ANY CONCRETE, ALL DRAWINGS SHALL BE CHECKED TO DETERMINE THAT ANCHOR BOLTS, EMBEDDED STEEL, PIPING, CONDUIT, DRAINS, BOXES, ETC. ARE PROPERLY INSTALLED.
   - 7.4 REPOSITIONING OF REINFORCING TO AVOID INTERFERENCE WITH EMBEDDED ITEMS SHALL BE APPROVED BY THE BUYER PRIOR TO PLACING CONCRETE.
   - 7.5 FLOOR SLABS (INTERIOR AND EXTERIOR) AND PAVING SHALL BE FINISHED PER PROJECT SPECIFICATION AND DRAWINGS.
   - 7.6 LATERAL SUPPORTS SHALL BE PROVIDED FOR WALLS DURING BACKFILLING EXCEPT AS NOTED ON THE DRAWINGS. WALLS THAT DO NOT REQUIRE LATERAL SUPPORT MUST ATTAIN AT LEAST 75% OF THE SPECIFIED STRENGTH (f'c) AS DETERMINED FROM FIELD CURED STRENGTH TESTS PRIOR TO BACKFILL.
   - 7.7 TOP OF PLASTIC ANCHOR BOLT SLEEVES SHALL BE CUT OFF FLUSH WITH ROUGH CONCRETE PRIOR TO GROUT OR EQUIPMENT INSTALLATION. SPECIAL EFFORT SHALL BE TAKEN TO ENSURE THAT SLEEVES ARE COMPLETELY FILLED WITH GROUT UNLESS NOTED OTHERWISE ON DRAWINGS.
   - 7.8 CHIP OR BRUSH-HAMMER CONCRETE SURFACE AS NECESSARY TO REMOVE ALL LAITANCE, UNSOUND CONCRETE, OIL OR GREASE STAINS, PAINT OR OTHER CONTAMINANTS AND PROVIDE A ROUGHED CONCRETE SURFACE WITH AT LEAST 1/4" PROFILE WHERE INDICATED.
8. CONCRETE COATINGS:
   - 8.1 FOR CONCRETE COATINGS, SEE DRAWINGS AND ARCHITECTURAL ROOM FINISH SCHEDULE, DWG 632435.
9. GENERAL:
   - 9.1 FOR REQUIREMENTS FOR FORMING, PLACING, CURING, MATERIALS AND ADDITIONAL REQUIREMENTS SEE PROJECT SPECIFICATIONS.
10. SUBGRADE:
    - 10.1 UNLESS NOTED OTHERWISE ON THE DESIGN DRAWINGS, THE NET ALLOWABLE SOIL BEARING USED FOR DESIGN IS 5000 PSF. NET ALLOWABLE SOIL BEARING IS DEFINED AS THE GROSS ALLOWABLE BEARING AT THE BOTTOM OF FOUNDATION LESS THE WEIGHT OF SOIL DISPLACED (110 PCF) BY THE FOUNDATION.

      THIS NET ALLOWABLE SOIL BEARING SHALL BE VERIFIED BY THE SOILS ENGINEER IN THE FIELD PRIOR TO PROCEEDING WITH WORK. WHERE SOIL BEARING IS DEEMED BY THE SOILS ENGINEER TO BE INADEQUATE THE SOIL SHALL BE OVEREXCAVATED AND REPLACED WITH STRUCTURAL FILL COMPACTED TO A MINIMUM OF 95% OF THE MAXIMUM DRY DENSITY AS DETERMINED BY THE MODIFIED PROTOR TEST PER PROJECT SPECIFICATION 02200.
    - 10.2 GROUND FLOOR SLABS SHALL BE CAST OVER A MINIMUM OF FOUR INCHES OF WELL COMPACTED FREE DRAINING GRANULAR FILL SUCH AS THREE QUARTER TO ONE INCH MINUS POORLY GRADED GRAVEL.
    - 10.3 FOR ADDITIONAL EXCAVATION, BACKFILL PLACEMENT AND COMPACTION REQUIREMENTS FOR UTILITIES AND STRUCTURES, REFER TO PROJECT SPECIFICATION 02200.
    - 10.4 REFER TO GEOTECHNICAL INVESTIGATION PREPARED BY MSE TECHNOLOGY APPLICATIONS, INC. DATED JANUARY 19, 2006.

DETAIL 1A
(PREFERRED)

DETAIL 1B
(ALTERNATE)

FLOOR SLAB JOINT SEAL
DETAIL 1
1" = 1"

WALL JOINT SEAL
DETAIL 2
1" = 1"

FLOOR SLAB EXPANSION/ISOLATION JOINT AT WALL, SLAB, OR FOUNDATION
DETAIL 3
1 1/2" = 1'-0"

SLAB ON GRADE

SAWCUT CONTROL JOINT (CTJ)
"D" = 8" OR MORE

SLAB ON GRADE

SAWCUT CONTROL JOINT (CTJ)
"D" = 6" OR LESS

SLAB ON GRADE

CONSTRUCTION JOINT (CJ)
"D" = 8" OR MORE

SLAB ON GRADE

CONSTRUCTION JOINT (CJ)
"D" = 6" OR LESS

MARK	PIPE DIA/WT	LENGTH A	PIPE WT (LBS/FT)
GP-4	4 XS	7'-0"	15.0
GP-6	6 STD	7'-6"	19.0
GP-8	8 STD	8'-0"	28.6
GP-10	10 STD	9'-0"	40.5

TAG EACH GROUP WITH MARK AND DRAWING NUMBER

TYPICAL GUARD POST
DETAIL 5
1/2" = 1'-0"

TYPICAL FLOOR DRAIN
DETAIL 6
1" = 1'-0"

WALL CONSTRUCTION JOINT

ALTERNATE GUARD POST INSTALLATION (5C / 632451)
3/4" = 1'-0"

ALTERNATE "A" FOR GP-8 GUARD POST
DETAIL 5A
3/4" = 1'-0"

SEE DETAIL 5 FOR ADDITIONAL INFORMATION

ALTERNATE "B" FOR GUARD POST
DETAIL 5B
3/4" = 1'-0"

REV	DESCRIPTION
5	AS BUILT AS OF 10-5-2011, PRIOR HISTORY REMOVED, INCORPORATED FCN 3073, SEE DRF-334538

REVISION HISTORY

SCALE: 1 1/2" = 1'-0"
SCALE: 1" = 1'-0"
SCALE: 3/4" = 1'-0"
SCALE: 1/2" = 1'-0"

DESIGN PHASE:
QUALITY LEVEL: 4
HORIZONTAL SCALE: NOTED
VERTICAL SCALE: NA
FOR DRAWING INDEX SEE DRAWING NO. 632450
SIGNATURES/DATES APPLY TO CURRENT RELEASE ONLY
DESIGN: NA
DRAFTER: A. KEY
TECHNICAL CHECK: NA
ENG GROUP SUPERVISOR: NA
DESIGN LEAD: NA
DRAFTING CHECK/EFFECTIVE DATE: K. KELLER

Idaho Cleanup Project
CPP-1696
INTEGRATED WASTE TREATMENT UNIT
CONCRETE GENERAL NOTES AND STANDARD DETAILS

PROJECT NUMBER: 25051
INDEX CODE NUMBER: AREA 200 TYPE 1696 CL 62 DISC 136
SIZE E DWG 632451 REV 5
DRF NO. — SHEET S-1

File: 632451-5.dwg Date: 10/10/11 - 2:06 PM Layout Name: S-1
Path: V:\...Vault\Designs\IWTU\STATE AS BUILT 10-14-2011\DRF-334538
ID: KEYAL

ANCHOR BOLT SCHEDULE–TYPE "ABR"

PART	MATERIAL
THREADED ROD	ASTM F1554,GRADE 36
PLAIN WASHER	ASTM F436
HEAVY HEX NUT	ASTM A563, GRADE A

MARK			SLEEVE	EMBEDMENT
DIAMETER "D"	TYPE	LENGTH "A"	FxG	"C" (MINIMUM)
1/2	ABR	SEE DRAWING CALLOUT	2 x 7	12
5/8	ABR		2 x 7	12
3/4	ABR		2 x 7	14
7/8	ABR		2 x 7	16
1	ABR		3 x 10	18
1 1/8	ABR		3 x 10	20
1 1/4	ABR		3 x 10	22
1 1/2	ABR		4 x 15	26
1 3/4	ABR		4 x 15	30
2	ABR		4 x 18	34

ALL DIMENSIONS ARE IN INCHES

ANCHOR BOLT SCHEDULE–TYPE "ABRH"

PART	MATERIAL
THREADED ROD	ASTM F1554,GRADE 105
PLATE WASHER	ASTM A572 GRADE 50
PLAIN WASHER	ASTM F436
HEAVY HEX NUT	ASTM A563, GRADE DH

MARK			SLEEVE	EMBEDMENT
DIAMETER "D"	TYPE	LENGTH "A"	FxG	"C" (MINIMUM)
1 1/2	ABRH	SEE DRAWING CALLOUT	4 x 15	32
1 3/4	ABRH		4 x 15	38
2	ABRH		4 x 18	44
2 1/4	ABRH		4 x 18	48
2 1/2	ABRH		6 x 24	54
2 3/4	ABRH		6 x 24	58
3	ABRH		6 x 24	64

ALL DIMENSIONS ARE IN INCHES

TYPICAL ANCHOR BOLT CALLOUT

ANCHOR BOLT NOTES:

1. TOP OF BOLT SHALL BE FLAT & CENTER PUNCHED BY THE FABRICATOR.
2. BOLTS SHALL BE TAGGED WITH MARK AND DRAWING NUMBER.
3. THREADS SHALL BE UNC.
4. IN LIEU OF TACK WELDING NUTS TO ANCHOR RODS, THREADS MAY BE DAMAGED TO PREVENT NUTS FROM BACKING OFF.

WELD PLATES – "WP"

TYPE	MARK	DIM'S "A"	DIM'S "B"	WT EA (LB)
I	WP-4	SEE DETAIL		2.0
II	WP-6	11	7	19.6
II	WP-8	13	9	22.4
II	WP-10	15	11	25.3
II	WP-12	17	13	28.1

ALL DIMENSIONS IN INCHES. TAG EACH GROUP WITH MARK AND DRAWING NUMBER.

TRENCH ANGLES – "TA"

TRENCH ANGLE
TA-1 THRU TA-3

MARK	DESCRIPTION	WT (LBS/FT)
TA-1	L2x2x 1/4 W/ BAR 1x 3/16	3.9
TA-2	L2x2x 1/4 W/ BAR 1x 1/4	4.1
TA-3	L2x2x 1/4 W/ BAR 1x 5/16	4.3
TA-4	L2x2x 1/4 W/ BAR 1x 1/4	4.1
TA-5	L2x2x 1/4 W/ BAR 1 1/4 x 1/4	4.3
TA-6	L2x2x 1/4 W/ BAR 1 1/2 x 1/4	4.5
TA-7	L2x2x 1/4 W/ BAR 1 3/4 x 1/4	4.7
TA-8	L2x2x 1/4 W/ BAR 2x 1/4	4.9
TA-9	L2x2x 1/4 W/ BAR 2 1/4 x 1/4	5.1
TA-10	L2x2x 1/4 W/ L1 1/4 x1 1/4 x 1/4	5.2
TA-11	L2x2x 1/4 W/ L1 1/2 x1 1/2 x 1/4	5.6
TA-12	L2x2x 1/4 W/ L1 3/4 x1 3/4 x 1/4	6.1
TA-13	L2x2x 1/4 W/ L2x2x 1/4	6.5
TA-14	L2x2x 1/4 W/ L2 1/2 x2 1/2 x 1/4	7.4

ALL DIMENSIONS IN INCHES
TAG EACH GROUP WITH MARK AND DRAWING NUMBER.

CURB ANGLES – "CA"

MARK	DESCRIPTION	WT (LBS/FT)
CA-2	L2x2x 1/4	3.2
CA-2 1/2	L2 1/2 x2 1/2 x 1/4	4.1
CA-3	L3x3x 1/4	4.9
CA-4H	L4x4x 5/8	16.6
CA-5H	L5x5x 5/8	20.9
CA-6H	L6x6x 5/8	25.2

ALL DIMENSIONS IN INCHES
TAG EACH GROUP WITH MARK AND DRAWING NUMBER.

LEVELING CHANNEL – "LC"

NOTES:
ALL DIMINSIONS IN INCHES. TAG EACH GROUP WITH MARK AND DRAWING NUMBER. SEE DRAWINGS FOR CALLOUTS.

TRENCH ANGLE FRAME ASSEMBLY – "TAF"

NOTE
TRENCH ANGLE FRAME ASSEMBLY MAY BE CONSTRUCTED FROM ASTM A36 STEEL.

ALL DIMENSIONS IN INCHES. TAG EACH GROUP WITH MARK AND DRAWING NUMBER.

MARK	A	B	TYPE	ANGLE SIZE	"C" BAR OR ANGLE SIZE	WT (LBS/FT.)
TAF-1	SEE DRAWING CALLOUT	SEE DRAWING CALLOUT	I	L2x2x 1/4	1x 3/16	3.9
TAF-2			I	L2x2x 1/4	1x 1/4	4.1
TAF-3			I	L2x2x 1/4	1x 5/16	4.3
TAF-4			II	L2x2x 1/4	1x 1/4	4.1
TAF-5			II	L2x2x 1/4	1 1/4 x 1/4	4.3
TAF-6			II	L2x2x 1/4	1 1/2 x 1/4	4.5
TAF-7			III	L2x2x 1/4	L1x1x 1/8	4.1
TAF-8			III	L2x2x 1/4	L1 1/4 x1 1/4 x1/4	5.2
TAF-9			III	L2x2x 1/4	L1 1/2 x1 1/2 x 1/4	5.6
TAF-10			III	L2x2x 1/4	L2 1/2 x 2 1/2 x 1/4	7.4
TAF-11			III	L2x2x 1/4	L3 1/2 x 2 1/2 x 1/4 LLV	8.2

PIPE SLEEVES – "PS"

MARK	PIPE DIA	LENGTH A	COLLAR B	COLLAR WT (LBS)	PIPE WT (LBS/FT)
PS-1 1/2	1 1/2	SEE DRAWING CALLOUT	6	2.6	2.7
PS-2	2		7	3.5	3.7
PS-3	3		8	4.5	7.6
PS-4	4		9	5.7	10.8
PS-6	6		12	10.2	19.0
PS-8	8		14	13.9	28.6
PS-10	10		16	22.7	40.5
PS-12	12		18	23.0	49.6
PS-14	14		20	28.4	54.6
PS-24	16		24	40.8	62.6

ALL DIMENSIONS IN INCHES. TAG EACH GROUP WITH MARK AND DRAWING NUMBER.

NOTE:

1. FOR GENERAL CONCRETE NOTES, SEE DWG 632451.

REV	DESCRIPTION
3	AS BUILT AS OF 10-5-2011
	SEE DRF-334538
2	INITIAL RELEASE SEE DRF-331780
	INCORPORATE FCN 1310, 1133, 0999
	PRIOR HISTORY REMOVED

REVISION HISTORY

NO SCALE

DESIGN PHASE:
QUALITY LEVEL: 4
HORIZONTAL SCALE: NONE
VERTICAL SCALE: NA
FOR DRAWING INDEX SEE DRAWING NO. 632450
DESIGN: NA
DRAFTER: A. KEY
TECHNICAL CHECK: NA
ENG GROUP SUPERVISOR: NA
DESIGN LEAD: NA
DRAFTING CHECK/EFFECTIVE DATE: K. KELLER

Idaho Cleanup Project
INTEC CPP-1696
INTEGRATED WASTE TREATMENT UNIT
CONCRETE STANDARD EMBEDMENT DETAILS AND SCHEDULES

PROJECT NUMBER: 25051
200 1696 62 136
SIZE E DWG 632452 REV 3
DRF NO. -- SHEET S-2

File: 632452-3.dwg Date: 10/11/11 3:10 PM Layout Name: 632452-2 ID: KEYAL
Path: V:_Vault\Designs\IWTU\STATE AS BUILT 10-14-2011\DRF-334538
FMT-E1-REV 4.2

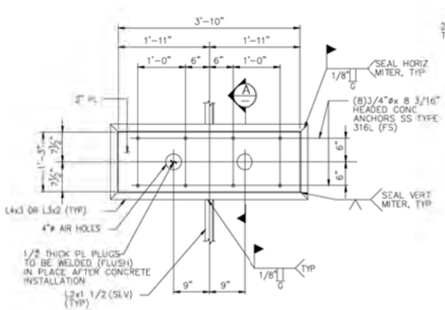

DETAIL 1
SCALE: 1"=1'-0"
632481 & 632482

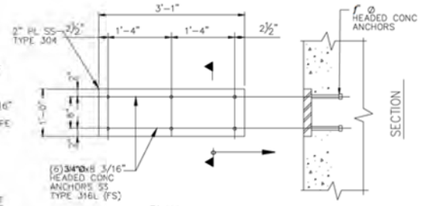

PLAN

DETAIL 2
SCALE: 1"=1'-0"
632481 & 632482

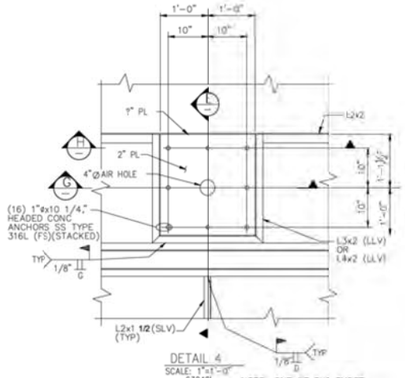

DETAIL 4
SCALE: 1"=1'-0"
632481
632483
632484

NOTE: ONE OF THE EMBED PLATES, INCLUDING ANGLES MEASURES 27 11/16", 1/16" OUT OF TOLERANCE PER NCR 07-134.

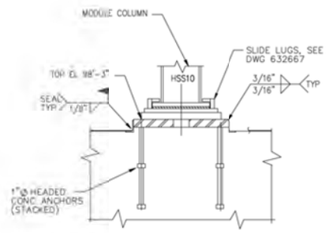

SECTION G-G
SCALE: 1"=1'-0"

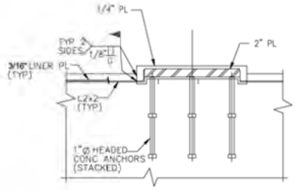

SECTION H-H
SCALE: 1"=1'-0"

NOTES

1. SAFETY SIGNIFICANT – PROCESS CELL, SHIELDING WALLS, FLOOR AND ROOF.
2. FOR CONCRETE GENERAL NOTES AND STANDARD DETAILS SEE DWGS 632451 AND 632452.
3. L4x3x1/4" MAY BE SUBSTITUTED FOR L4x2x, COPE TO FIT AT TRENCHES AND WALL PLATES, PER-DCN-WTU-201.
4. FOR DETAIL 4 EMBED PLATES, DURING EMBED INSTALLATION, IF HEADED CONCRETE ANCHORS ON AN EMBED PLATE INTERFERE WITH REBAR, THEY MAY BE RELOCATED IN THE FIELD UP TO 1 1/2" TOWARDS THE CENTER OF THE PLATES.

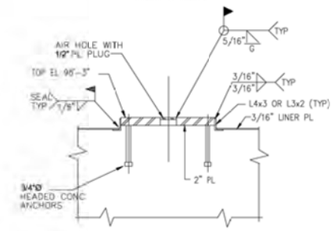

SECTION A-A
SCALE: NOT TO SCALE

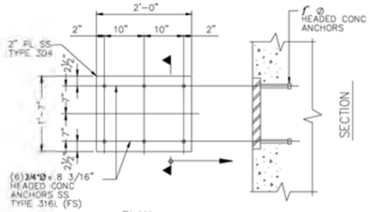

PLAN

DETAIL 3
SCALE: 1"=1'-0"
632481 & 632482

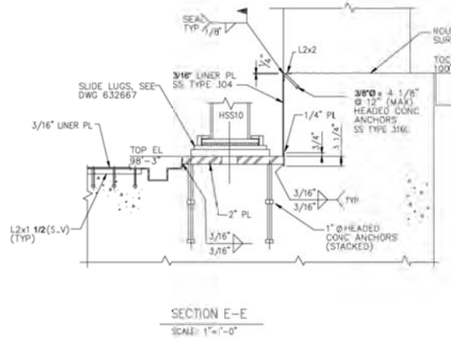

SECTION E-E
SCALE: 1"=1'-0"

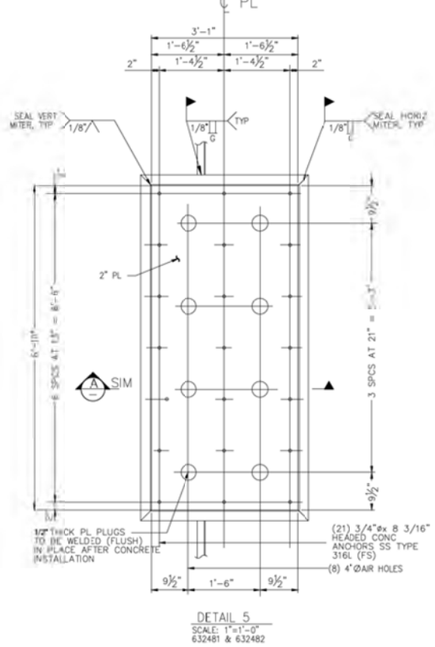

DETAIL 5
SCALE: 1"=1'-0"
632481 & 632482

REV	DESCRIPTION
4	AS BUILT AS OF 10-5-2011, PRIOR HISTORY REMOVED, REVISED TITLEBLOCK SEE ORF-334538

REVISION HISTORY

SCALE: 1" = 1'-0"

DESIGN PHASE:	
QUALITY LEVEL:	2
HORIZONTAL SCALE:	NOTED
VERTICAL SCALE:	NA
FOR DRAWING INDEX SEE DRAWING NO.	632450
SIGNATURES/DATES APPLY TO CURRENT REVISION ONLY	NOT INCLUDED

DESIGN:	NA	-- --
DRAWN:	A. ICY	Ronald Rice 10/10/11
TECHNICAL CHECK:	NA	-- --
ENG GROUP SUPERVISOR:	NA	-- --
DESIGN LEAD:	NA	-- --
DRAFTING CHECK / EFFECTIVE DATE:	K. KELLER	Kelli Keller 10/10/11

Idaho Cleanup Project

INTEC CPP-1696
INTEGRATED WASTE TREATMENT UNIT

CONCRETE PROCESS CELL FOUNDATION LINER PLATE EMBEDMENT DETAILS SHT 1 OF 2

PROJECT NUMBER: 25051

CONTR	DWG	SHEET	REV
232	11698	67	1072

E | DWG 632483 | REV 4

ORF NO. --- | SHEET S-33

© KEYAL

File: 632483-4.dwg Date: 10/10/11 2:04 PM Layout: NoEmbedment
Path: X:\Active\Designs\INTEC\STATE AS BUILT 10-14-11\ORF-334538

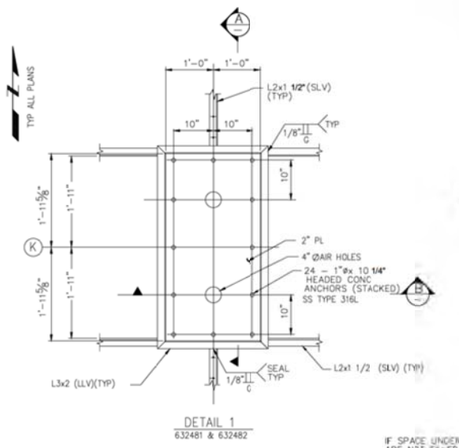

DETAIL 1
632481 & 632482

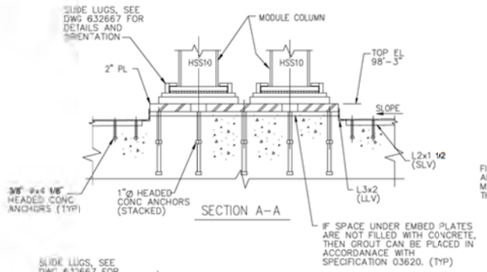

SECTION A–A

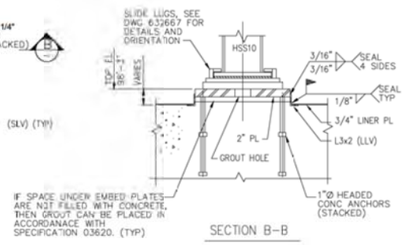

SECTION B–B

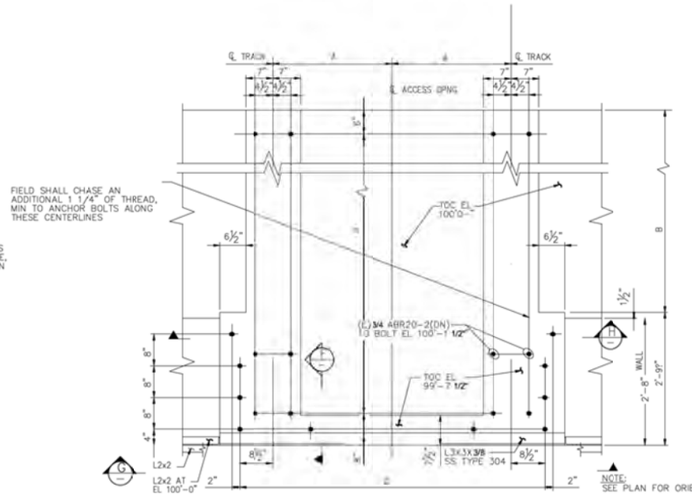

NOTES

1. SAFETY SIGNIFICANT – PROCESS CELL, SHIELDING WALLS, FLOOR AND ROOF.
2. FOR CONCRETE GENERAL NOTES AND STANDARD DETAILS SEE DWGS 632451 AND 632452.
3. STAINLESS STEEL TYPE 304L ANGLES MAY BE SUBSTITUTED FOR STAINLESS STEEL TYPE 304.
4. FLOOR GRATING SHALL BE QUALITY LEVEL 4.
5. IF ANCHOR RODS NEED TO BE BENT OR STRAIGHTENED, THEN UTILIZE THE FOLLOWING PROCEDURES. ANCHOR ROD BENDING/STRICHTENING SHALL BE CONTROLLED AND DOCUMENTED IN THE APPLICABLE CWCP.

A. BENDINGS ANCHOR RODS:
1. HEAT ANCHOR RODS TO A DULL RED COLOR (APPROXIMATELY 1100–1300 DEGREES FAHRENHEIT) FROM 1 1/2 TO 2 INCHES ABOVE THE CONCRETE SURFACE (TO AVOID SPALLING.)
2. BEND THE ANCHOR RODS ONLY AS MUCH AS NECESSARY TO CLEAR THE BASE SLAB ELEVATION.

B. STRAIGHTENING ANCHOR RODS:
1. HEAT ANCHOR RODS TO A DULL RED COLOR (APPROXIMATELY 1100–1300 DEGREES FAHRENHEIT) FROM 1 1/2 TO 2 INCHES ABOVE THE CONCRETE SURFACE (TO AVOID SPALLING.)
2. BEND THE ANCHOR RODS BACK TO AN APPROXIMATELY VERTICAL POSITION.

BLOCKOUT & ANCHOR BOLT SCHEDULE						
DETAIL/LOCATION	QTY	A	B	C (BOLT SPCG)	D (BOLT SPCG)	E (QTY)
4/632481 & 632482	3	1'-3"	7'-4 1/2"	3 SPCS @ 15 11/16"	6 SPCS @ 18"	38
5/632481 & 632482	2	3'-1 1/4"	7'-4 1/2"	6 SPCS @ 15 1/4"	6 SPCS @ 18"	41
6/632491	2	2'-5 1/2"	4'-4 1/2"	4 SPCS @ 19"	4 SPCS @ 18"	31
7/632491	1	2'-5 1/2"	10'-4 1/2"	4 SPCS @ 19"	8 SPCS @ 18"	49

REFERENCE FCN–00070; DUE TO REINFORCING INTERFERENCES WITH ANCHOR BOLT PLACEMENTS FOR ACCESS PLUG FRAMES.

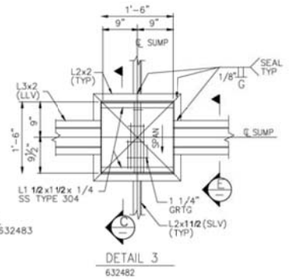

DETAIL 3
632482

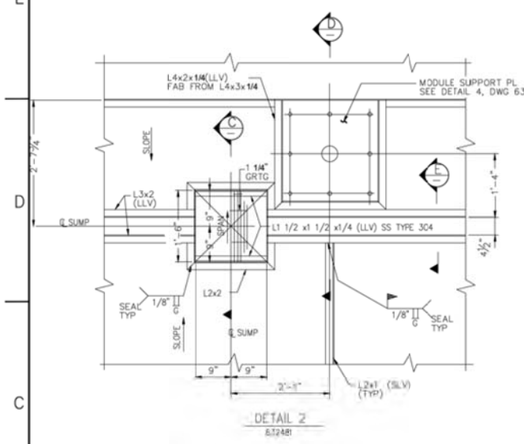

DETAIL 2
632481

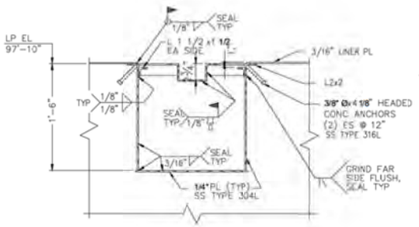

SECTION C–C

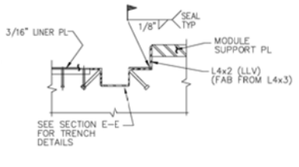

SECTION D–D
SCALE: 1"=1'–0"

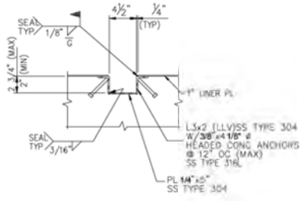

SECTION E–E
SCALE: 1"=1'–0"

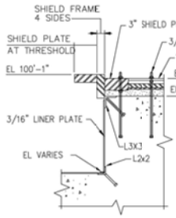

SECTION F–F

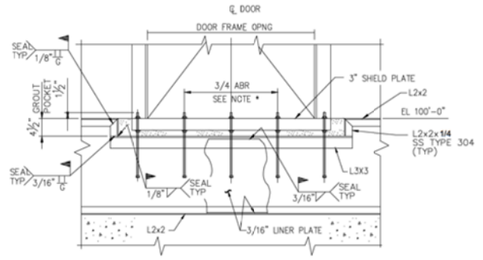

SECTION G–G

* AFTER RAILS & SHIELD PL HAVE BEEN GROUTED INTO FINAL POSITION, CUT & GRIND BOLTS OFF FLUSH WITH TOP OF PLATE AND SECURE WITH COMPLETE PENETRATION WELDS.

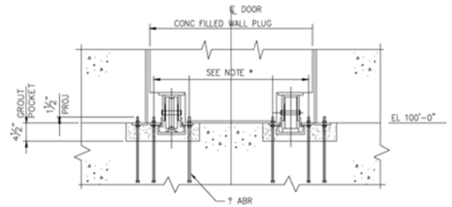

SECTION H–H

REV.	DESCRIPTION
4	AS BUILT AS OF 10-5-2011, PRIOR HISTORY REMOVED, REVISED TITLEBLOCK SEE ORF-334538

REVISION HISTORY

SCALE: 1" = 1'–0"

DESIGN PHASE:	
QUALITY LEVEL:	2
HORIZONTAL SCALE	NOTED
VERTICAL SCALE	NA
FOR DRAWING INDEX SEE DRAWING NO.	632450
SUPERSEDED (OPEN) BY: CURRENT RELEASE ONLY	
DESIGN: NA	Print/Date / Sign
DRAWN BY: A. KEY	Print/Date / Sign
TECHNICAL CHECK: NA	Print/Date / Sign
ENG GROUP SUPERVISOR: NA	Print/Date / Sign
DESIGN LEAD: NA	Print/Date / Sign
DRAFTING CHECK/ EFFECTIVE DATE: K. KELLER	Print/Date / Sign

Idaho Cleanup Project

INTEC CPP–1696
INTEGRATED WASTE TREATMENT UNIT

CONCRETE PROCESS CELL FOUNDATION LINER PLATE EMBEDMENT DETAILS SHT 2 OF 2

PROJECT NUMBER: 25051

CONTROL NUMBER			
BLOCK	TYPE	NO.	DISC
200	1696	02	023

DWG 632484 REV 4

ENF NO. --- SHEET: 5-34

File: 632484-4.dwg
Path: V:\Vault\Designs\Civil\

Date: 10/10/11 1:40 PM Layout Name: Layout1
Xrefs: AS BUILT 10-14-11.DWG 334538

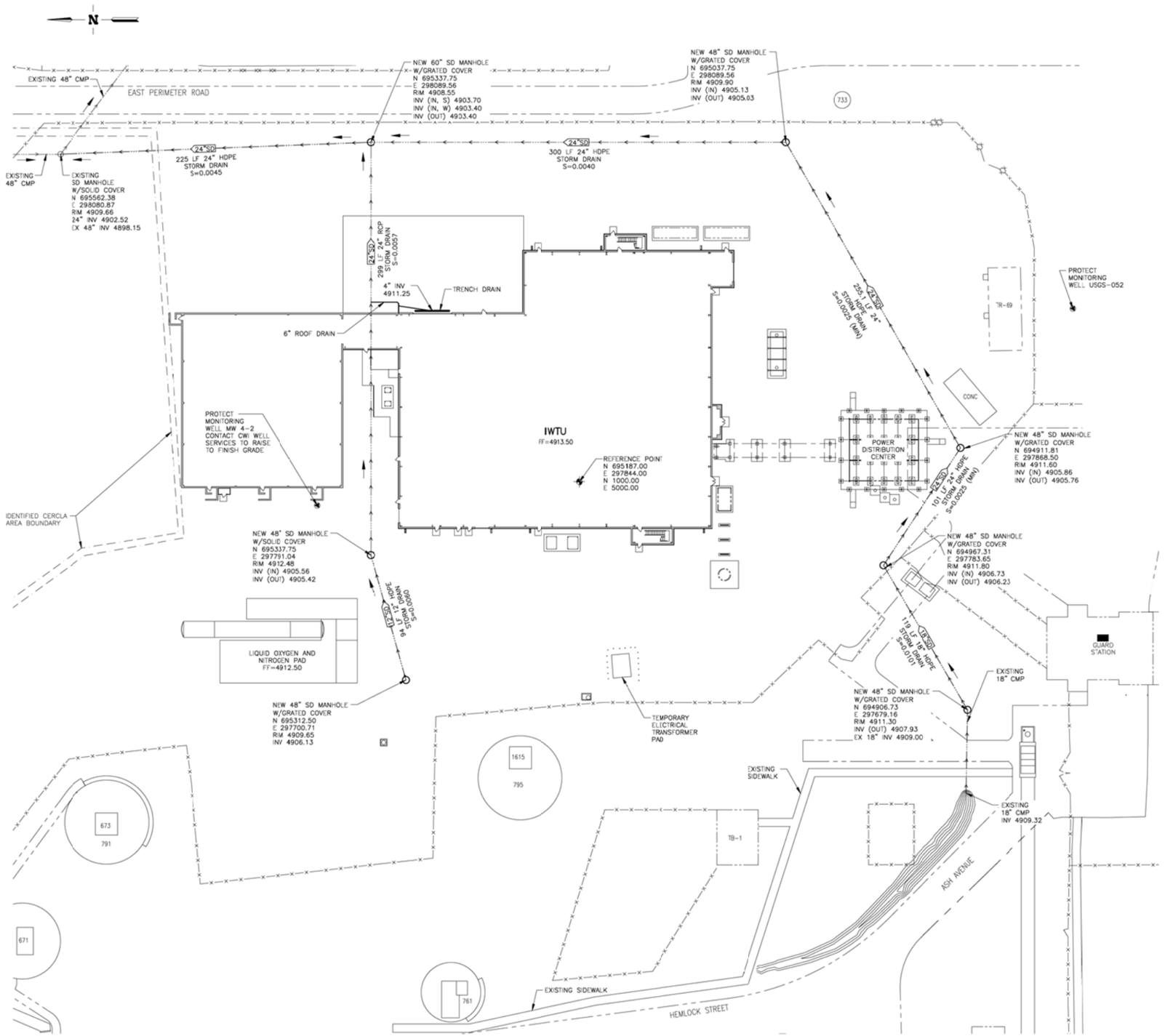

SITE DRAINAGE PLAN

SCALE: 1" = 25.0'

REV	DESCRIPTION
1	AS BUILT AS OF 10/3/2011
	SEE DWG 334544

REVISION HISTORY

SCALE: 1" = 25.0'

DESIGN PHASE:	
QUALITY LEVEL:	3
HORIZONTAL SCALE:	NOTED
VERTICAL SCALE:	NA

FOR DRAWING INDEX SEE DRAWING NO. 632151

DESIGN:	NA	
DRAFTER:	K. MUNNS	
TECHNICAL CHECK:	NA	
CM2 GROUP SUPERVISOR	NA	
DESIGN LEAD:	NA	
DRAFTING CHECK/ EFFECTIVE DATE:	K. KELLER	

Idaho Cleanup Project

INTEC CPP-1696
INTEGRATED WASTE TREATMENT UNIT
IWTU SITE WORK

DRAINAGE PLAN

PROJECT NUMBER: 25051

WORK ORDER NUMBER			
ACTIVITY	SYS	PCE	SEQ
200	01100	02	136

DWG NO. 632340 REV 1

SHEET 1 OF 1

© MUNNS

File: 632340-1.dwg Date: 10/12/11 11:55 AM Layout: Normal(portrait)
Path: V:\Projects\INTEC_IS_BUILT_10-14-2011\DWG\334544 DWG-632340-1.dwg

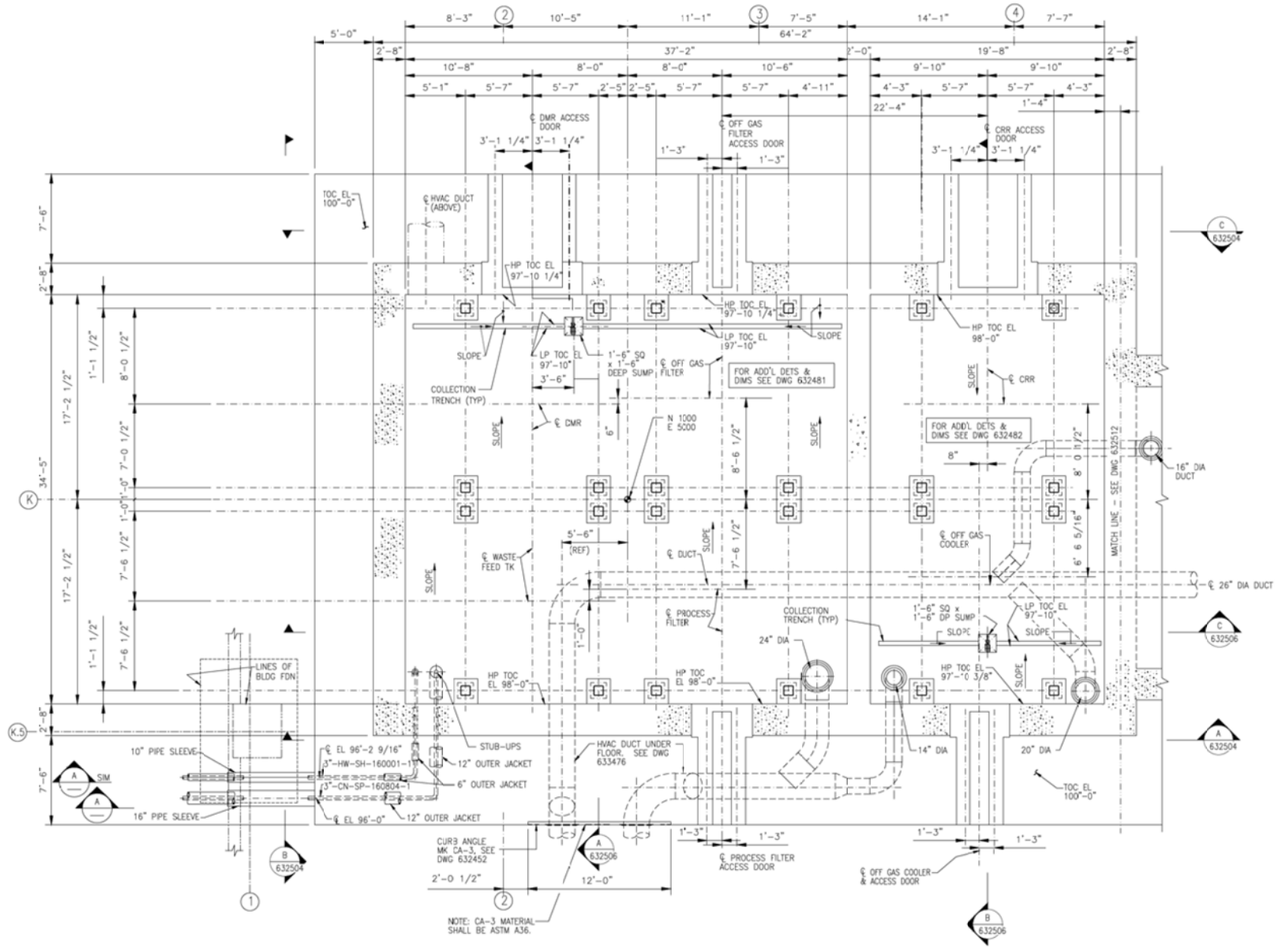

FLOOR PLAN EL 100'-0"

SCALE: 1/4"=1'-0"

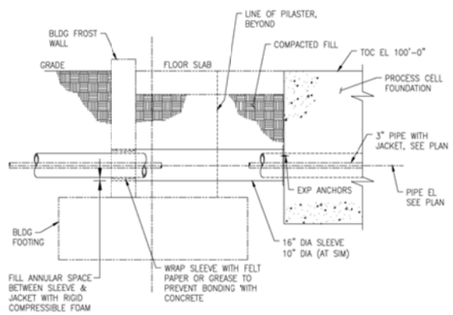

SECTION A

NOT TO SCALE

NOTES

1. SAFETY SIGNIFICANT – PROCESS CELL, SHIELDING WALLS, FLOOR AND ROOF.
2. FOR CONCRETE GENERAL NOTES AND STANDARD DETAILS SEE DWGS 632451 AND 632452.
3. WORK THIS DWG WITH DWGS 632504, 632505, 632506 AND 632481.
4. FOR REINFORCEMENT PLANS, SECTIONS AND DETAILS, SEE DWGS 632519 THRU 632527.
5. FOR CONSTRUCTION JOINT LAYOUT, SEE DWG 632520.

REV	DESCRIPTION
6	AS BUILT AS OF 10-5-2011 SEE DRF-334538
5	INITIAL RELEASE, SEE DRF-331780 PRIOR HISTORY REMOVED

REVISION HISTORY

SCALE: 1/4" = 1'-0"

DESIGN PHASE:
QUALITY LEVEL: 2
HORIZONTAL SCALE: NOTED
VERTICAL SCALE: NA
FOR DRAWING INDEX SEE DRAWING NO. 632450
SIGNATURES/DATES APPLY TO CURRENT RELEASE ONLY: SIGN AND DATE
DESIGN: NA
DRAFTER: A. KEY
TECHNICAL CHECK: NA
ENG GROUP SUPERVISOR: NA
DESIGN LEAD: NA
DRAFTING CHECK/ EFFECTIVE DATE: K. KELLER

Idaho Cleanup Project

CPP-1696
INTEGRATED WASTE TREATMENT UNIT
CONCRETE PROCESS CELLS

PLAN, SECTIONS AND DETAILS

PROJECT NUMBER: 25051

DRAWING NUMBER				
SHEET	NO.	REV	CODE	
200	1696	63	136	

SIZE E DWG- 632503 REV 6

ERF NO. SHEET 5-53

© KEYAL

File: 632503-6.dwg Date: 10/11/11 - 2:15 PM Layout: Normal
Path: V:_Vault\Designs\WMS\STATE AS BUILT 10-14-2011\DRF-334538

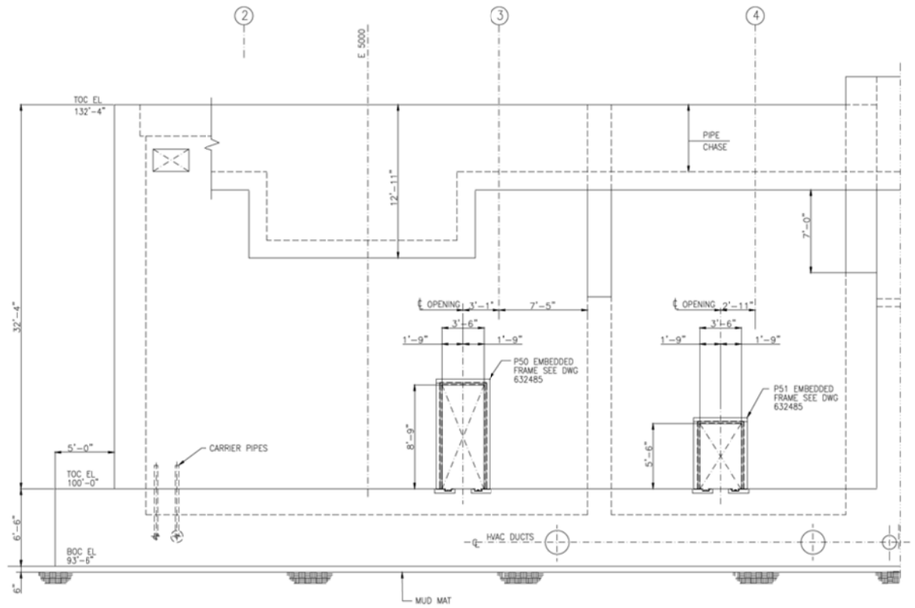

SECTION A
SCALE: 1/4"=1'-0" 632503

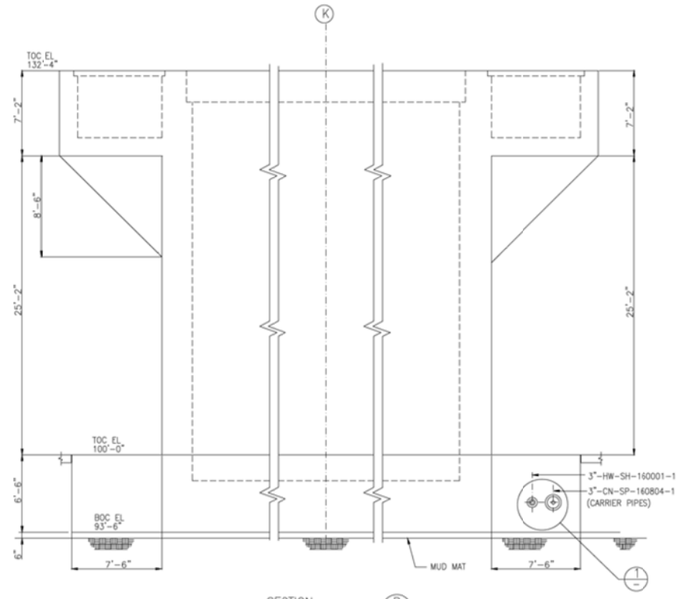

SECTION B
SCALE: 1/4"=1'-0" 632503

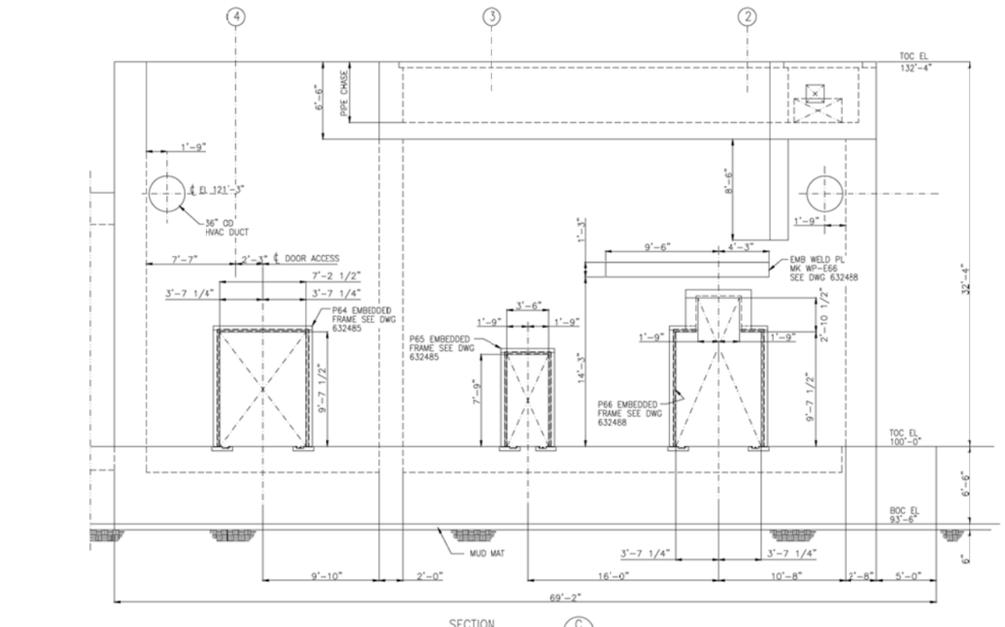

SECTION C
SCALE: 1/4"=1'-0" 632503

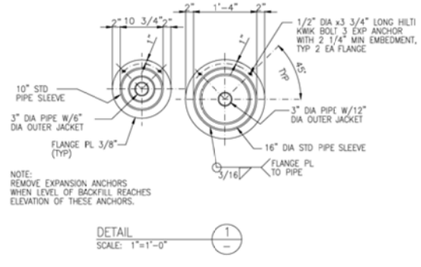

NOTE:
REMOVE EXPANSION ANCHORS WHEN LEVEL OF BACKFILL REACHES ELEVATION OF THESE ANCHORS.

DETAIL 1
SCALE: 1"=1'-0"

NOTES

1. SAFETY SIGNIFICANT -- PROCESS CELL, SHIELDING WALLS, FLOOR AND ROOF.
2. FOR CONCRETE GENERAL NOTES AND STANDARD DETAILS SEE DWGS 632451 AND 632452.
3. FOR MAT CONSTRUCTION JOINT LAYOUT, SEE DWG 632520.

REV.	DESCRIPTION
5	AS BUILT AS OF 10-5-2011
	PRIOR HISTORY REMOVED,
	SEE DRF-334538

REVISION HISTORY

SCALE: 1/4" = 1'-0"

SCALE: 1" = 1'-0"

DESIGN PHASE:	
QUALITY LEVEL:	2
HORIZONTAL SCALE:	NOTED
VERTICAL SCALE:	NA
FOR DRAWING INDEX SEE DRAWING NO.	632450
SIGNATURE/DATE AFFIX TO CURRENT RELEASE ONLY	SIGN AND DATE
DESIGN: NA	– –
DRAFTER: A. KEY	Original sign on file 09/11/11 (10:04:40 MDT)
TECHNICAL CHECK: NA	– –
ENG GROUP SUPERVISOR: NA	– –
DESIGN LEAD: NA	– –
DRAFTING CHECK/ EFFECTIVE DATE: R. KELLER	Acceptance on file 09/11/11(10:11:00 MDT)

Idaho Cleanup Project

CPP-1696
INTEGRATED WASTE TREATMENT UNIT
CONCRETE PROCESS CELLS

WALL ELEVATIONS

PROJECT NUMBER: 25051

CONTRACT NUMBER			
USAF	FAIR	FA	DRAWING
2000	1696	611	56

SIZE: E | DWG: 632504 | REV: 5

REF NO. | SHEET: 5-54

© KCAL

File: 632504-5.dwg Date: 10/10/11 12:57 PM Layout Name: Layout1
Path: V:\Vault\Designs\ STATE AS BUILT 10-14-2011\DRF-334538

* NOTE
WELD SHALL BE A BUTT JOINT WITH BACKER BAR AND GROUND FLUSH. CONCRETE SHALL BE CUT AND/OR BUSHED TO A 3/16" DEPTH, MIN., TO ACCEPT A 3/16" BACKER BAR. THIS IS THE TYPICAL WELD TO ASSEMBLE AND JOIN THE FLOOR PLATE. FIELD SHALL DETERMINE ADDITIONAL JOINT LOCATIONS FOR EASE OF FLOOR PLATE INSTALLATION.

NOTES
1. SAFETY SIGNIFICANT – PACKAGING CELL, SHIELDING WALLS, FLOOR AND ROOF.
2. FOR CONCRETE GENERAL NOTES AND STANDARD DETAILS SEE DWGS 632451 AND 632452.
3. FOR CONSTRUCTION JOINT LAYOUT, SEE DWG 632520.
4. GROUNDING REQUIRED AT 2 PLACES IN ROOM 115. LOCATED PER DRAWING 633632. ATTACH GROUNDING CONDUCTOR PER DETAIL 1 DRAWING 633630.
5. FLOOR GRATING SHALL BE QUALITY LEVEL 4.

REV	DESCRIPTION
6	AS BUILT AS OF 10-5-2011, PRIOR HISTORY REMOVED, REVISED TITLEBLOCK, INCORP'D FCN 1524, 1539, SEE DRF-334538

REVISION HISTORY

DESIGN PHASE:	
QUALITY LEVEL:	2
HORIZONTAL SCALE	NOTED
VERTICAL SCALE	NA

FOR DRAWING INDEX SEE DRAWING NO. 632450

SIGNATURES/DATES APPLY TO CURRENT RELEASE ONLY

DESIGN: NA	
DRAFTER: A. KEY	
TECHNICAL CHECK: NA	
ENG GROUP SUPERVISOR: NA	
DESIGN LEAD: NA	
DRAFTING CHECK/EFFECTIVE DATE: K. KELLER	

Idaho Cleanup Project

INTEC CPP-1696
INTEGRATED WASTE TREATMENT UNIT

CONCRETE PACKAGING CELLS PLANS, SECTIONS, AND DETAILS

PROJECT NUMBER: 25051

AREA	FACIL	CC	DISC
200	1696	62	923

SIZE E DWG- 632512 REV 6
DRF NO. -- SHEET S-62

File: 632512-6.dwg Date: 10/12/11 11:33 AM Layout Name: Layout1
Path: V:_Vault\Designs\IWTU\STATE AS BUILT 10-14-2011\DRF-334538
ID: KEYAL

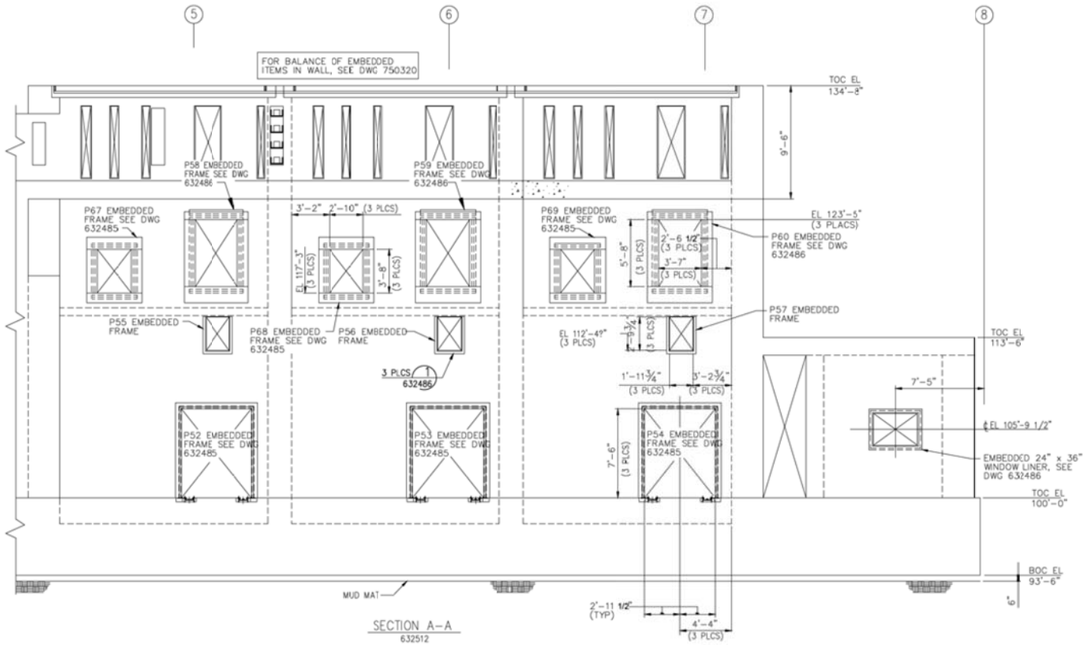

SECTION A–A
632512

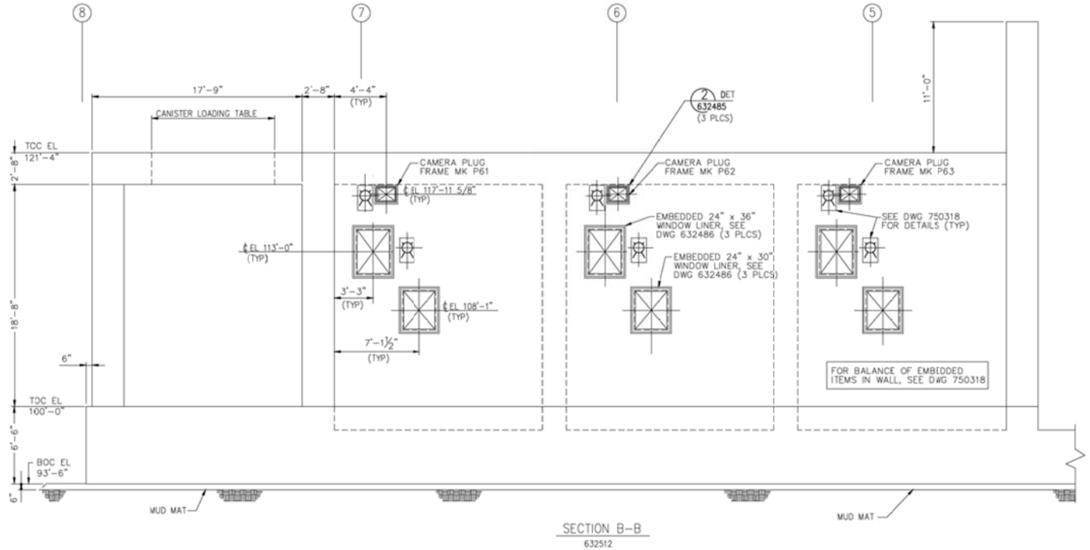

SECTION B–B
632512

NOTES
1. SAFETY SIGNIFICANT – PACKAGING CELL, SHIELDING WALLS, FLOOR AND ROOF.
2. FOR CONCRETE GENERAL NOTES AND STANDARD DETAILS SEE DWGS 632451 AND 632452.
3. FOR MAT CONSTRUCTION JOINT LAYOUT, SEE DWG 632520.

REV	DESCRIPTION
	REVISION HISTORY
	SEE DRF-334538
	HISTORY REMOVED, REVISED TITLEBLOCK
4	AS BUILT AS OF 10-5-2011, PRIOR

DESIGN PHASE:
QUALITY LEVEL: 2
HORIZONTAL SCALE: NOTED
VERTICAL SCALE: NA
FOR DRAWING INDEX SEE DRAWING NO. 632450
SIGNATURES/DATES, AFFECT ID CURRENT RELEASE ONLY
DESIGN: NA
DRAWN: A. KLY
TECHNICAL CHECK: NA
CMO GROUP: NA
DESIGN LEAD: NA
DRAWING STATUS/ EFFECTIVE DATE: K. KELLER

Idaho Cleanup Project
INTEC CPP-1696
INTEGRATED WASTE TREATMENT UNIT
CONCRETE PACKAGING CELLS WALL ELEVATIONS

PROJECT NUMBER: 25051
SDI/T SHEET NUMBER
DWG. TYPE: DWG
SEQ. NUMBER: 632513
REV: 4
DWG. NO.: 632513
SHEET: S-63

File: 632513-4.dwg Date: 10/10/11 4:46 PM Layout: Name: Engineer1
Path: X:\...\Design\Drawings\STATE AS BUILT 10-14-2011\DRF-334538

- A PRODUCT STORAGE BUILDING
- B CONTROL ROOM
- C MECHANICAL AREA
- D ADDITIVES AREA
- E PROCESS AREA
- F TRUCK AIRLOCK
- G OFF-GAS & HVAC AREA
- J POWER DISTRIBUTION CENTER (CPP-2719)
- K N2/O2 STORAGE AREA
- L BREATHING AIR COMPRESSOR AREA

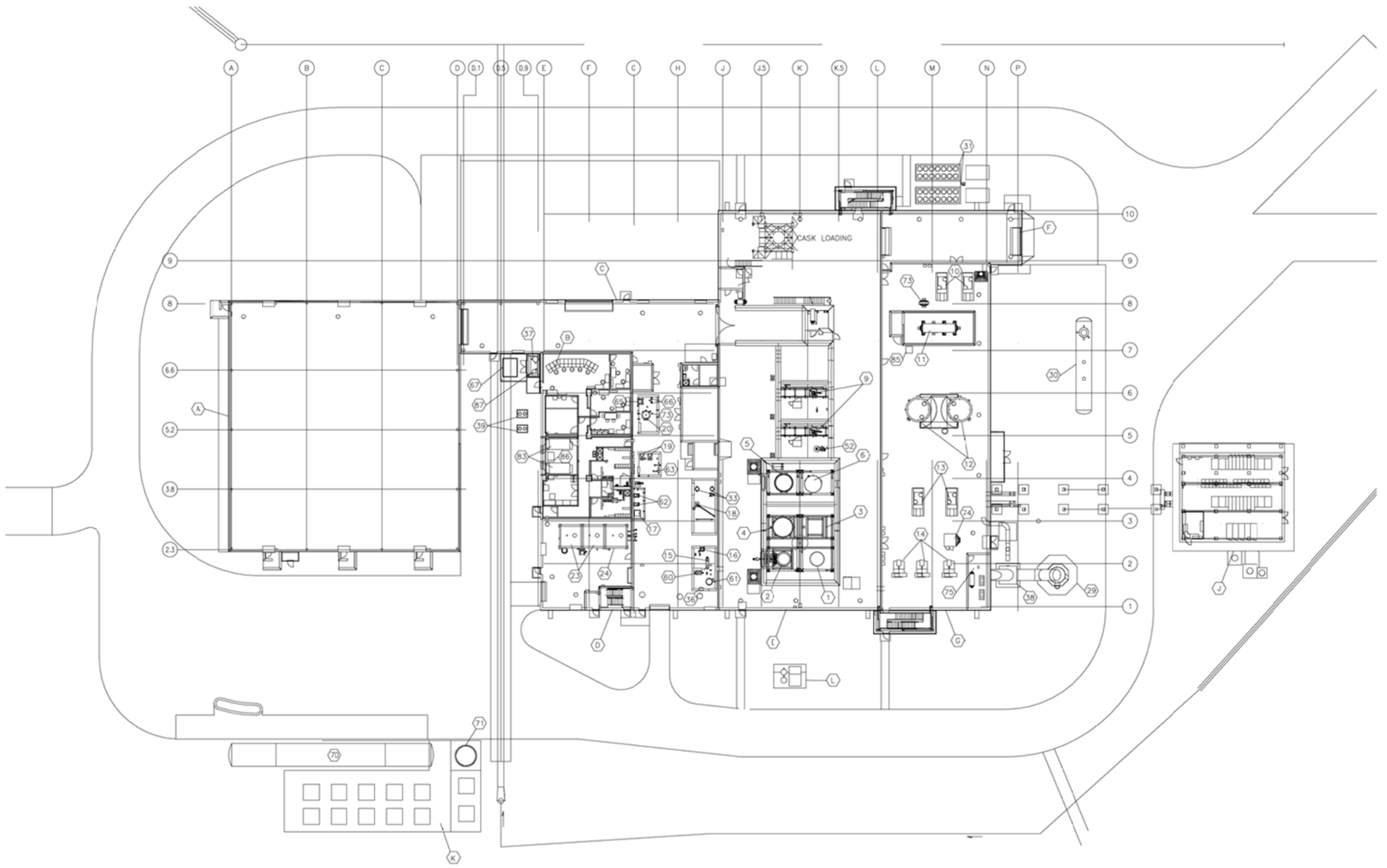

1	VES-SRC-131	WASTE FEED TANK	15	VES-SRB-175	PRESSURE POWERED PUMP RECEIVER	34	NO LONGER USED
2	VES-SRC-140	DENITRATION/MINERALIZATION REFORMER	16	DES-SRB-175	STEAM SEPARATOR	35	NO LONGER USED
3	F-SRC-153	SBW PROCESS GAS FILTER	17	CONT-SRB-178	DECON NITRIC ACID TOTE	36	HTR-SRB-357 NITROGEN HEATER
4	F-SRC-160	SBW OFF-GAS FILTER	18	HTR-SRB-364	STEAM PREHEATER	37	VES-SRE-170 AIR PALLET COMPRESSOR RECEIVER
5	VES-SRC-160	CARBON REDUCTION REFORMER	19	P-SRB-297-A/B	TREATED WATER PUMPS	38	MIX-SRH-140 AIR RECEIVER BOX
6	COL-SRC-160	SBW OFF-GAS COOLER	20	VES-SRB-166	INSTRUMENT AIR RECEIVER	39	CHI-SRE-705-A/B AHU COOLING COIL CONDENSER
7	NO LONGER USED		21	NO LONGER USED		52	F-SRC-190 PRODUCT HANDLING VACUUM FILTER
8	NO LONGER USED		23	VES-SRB-137,138	COAL STORAGE SILOS	56	NO LONGER USED
9	CRT-SRC-990,991,~~992~~	CANISTER FILL STATION CARTS	24	VES-SRB-139	CARBON STORAGE SILO	59	VES-SRC-180 PRODUCT RECEIVER FILTER PRODUCT PUMP
10	BLO-SRH-260-A/B	SBW OFF-GAS BLOWERS	29	STK-SRE-140	STACK	60	P-SRB-175 PRESSURE POWERED PUMP
11	F-SRH-140-A/B	PROCESS HEPA FILTERS	30	TK-SRE-196	HEPA FIREWATER COLLECTION TANK(UNDERGROUND)	61	VES-SRB-159 INSTRUMENT NITROGEN SURGE VESSEL
12	F-SRH-141-A/B	MERCURY ADSORBERS	31	CHI-SRE-704-A/B	AIR COOLED CHILLERS	62	P-SRB-278-A/B DECON NITRIC ACID METERING PUMP
13	BLO-SRH-240-A/B	PROCESS EXHAUST BLOWERS	32	NO LONGER USED		63	HTR-SRB-340 TREATED WATER PIPELINE HEATER
14	BLO-SRH-200-A/C	BUILDING EXHAUST FANS	33	F-SR8-164-A/B	SINTERED STEAM FILTERS	64	NO LONGER USED

65	VES-SRB-148	INTRUMENT AIR HEADER CHAMBER	71	VES-SRE-124	LIQUID OXYGEN STORAGE		
66	F-SRB-167-A/B	MAIN AIR SUPPLY COALESCING FILTERS	72	NO LONGER USED			
67	COM-SRE-270	AIR PALLET COMPRESSOR	73	F-SRB-166	INSTRUMENT AIR FILTER		
68	NO LONGER USED		74	F-SRH-150A	HEPA		
69	NO LONGER USED		75	F-SRH-152	HEPA		
70	VES-SRE-121	LIQUID NITROGEN STORAGE	76	INRT-SRH-140	PROCESS HEPA FIRE SCREEN		
			83	AHU-SRB-703-A/B	AIR HANDLING UNITS		
			85	P-SRH-200	DUPLEX CONDENSATE UNIT		
			86	P-SRB-203	DUPLEX CONDENSATE UNIT		
			87	DRI-SRE-370	AIR PALLET COMPRESSOR DRYER		

REV.	DESCRIPTION
4	AS BUILT AS OF 10-5-2011, PRIOR
	HISTORY REMOVED, SEE DRF-334545

REVISION HISTORY

SCALE: 1" = 20.0'

DESIGN PHASE:	
QUALITY LEVEL:	4
HORIZONTAL SCALE	NOTED
VERTICAL SCALE	NA
FOR DRAWING INDEX SEE DRAWING NO.	632185
SIGNATURES/DATES APPLY TO CURRENT RELEASE ONLY	SIGN AND DATE
DESIGN: NA	
DRAFTER: A. KEY	
TECHNICAL CHECK: NA	
CM/C GROUP SUPERVISOR: NA	
DESIGN LEAD: NA	
DRAFTING CHECK/ EFFECTIVE DATE:	K. KELLER

Idaho Cleanup Project

INTEC
INTEGRATED WASTE TREATMENT UNIT
SITE
EQUIPMENT ARRANGEMENT
PLAN EL. 100'-0" TO 120'-0"

PROJECT NUMBER: 25051

DRAWING NUMBER			
SHEET	ZONE	AREA	SYSTEM
001	119	61	136

DWG NO. 632830 REV. 4

SHEET: P-81

DRF NO. -

© KEMIL

File: 632830-4.dwg Date: 10/13/11 5:11 PM Layout: North Plan01
Path: X:\Work\Designs\632830-4.dwg STAT AS BUILT 10-14-2011DRF-334545

A CANISTER VAULT STORAGE BUILDING
C MECHANICAL AREA
D ADDITIVES AREA
E PROCESS AREA
G OFF-GAS & HVAC AREA

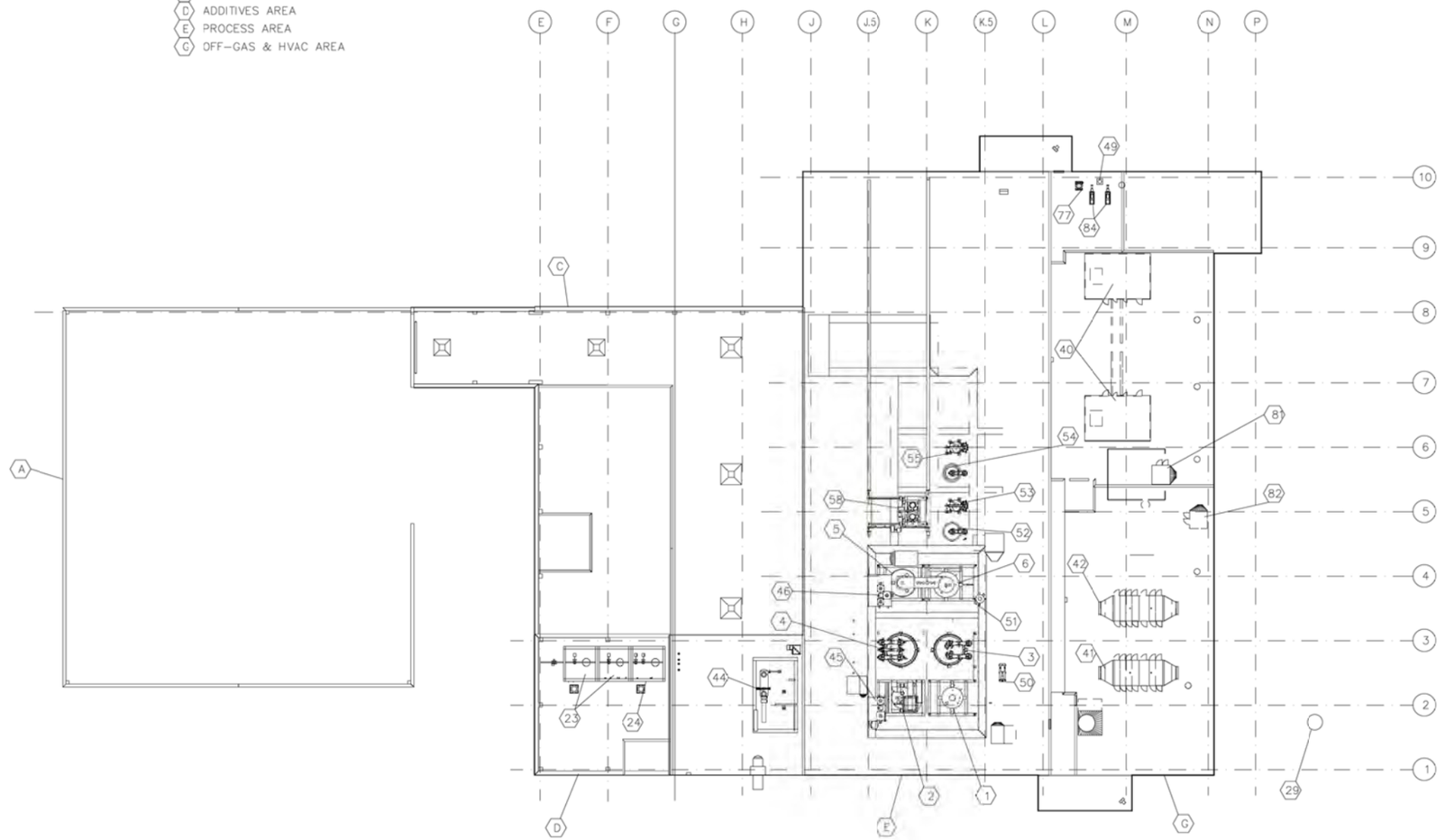

1	VES-SRC-131	WASTE FEED TANK	45		DMR ADDITIVE BIN	82	F-SRH-145	HEPA ROOM EXHAUST
2	VES-SRC-140	DENITRATION/MINERALIZATION REFORMER	46		CRR ADDITIVE BIN	84	P-SRH-201 A/B	CHILLED WATER CIRC. PUMPS
3	F-SRC-153	SBW PROCESS GAS FILTER	49	VES-SRH-182	CHILLED WATER EXPANSION TANK			
4	F-SRC-160	SBW OFF-GAS FILTER	50	P-SRC-231	WASTE FEED PUMP			
5	VES-SRC-160	CARBON REDUCTION REFORMER	51	VES-SRC-161	SBW OFF-GAS COOLER SURGE WATER TANK			
6	COL-SRC-160	SBW OFF-GAS COOLER	52	F-SRC-190	PRODUCT HANDLING VACUUM FILTER			
23	VES-SRB-137/138	COAL STORAGE SILOS	53	VES-SRC-190	PRODUCT RECEIVER/COOLER 0			
24	VES-SRB-139	CARBON STORAGE SILO	54	F-SRC-191	PRODUCT RECEIVER FILTER			
29	STK-SRE-140	STACK	55	VES-SRC-191	PRODUCT RECEIVER/COOLER 1			
40	AHU-SRH-701-A/B	AIR HANDLING UNITS	56	NO LONGER USED				
41	F-SRH-131	BUILDING EXHAUST HEPA	57	NO LONGER USED				
42	F-SRH-132	BUILDING EXHAUST HEPA	58	CRN-SRC-985	TRANSFER BELL CRANE			
43	NO LONGER USED		77	VES-SRH-181	AIR SEPARATOR			
44	HTR-SRB-365	FLUIDIZING GAS SUPERHEATER	81	F-SRH-144	AHU ROOM EXHAUST HEPA			

REV.	DESCRIPTION
3	AS BUILT AS OF 10-5-2011, PRIOR HISTORY REMOVED, REVISED TITLEBLOCK SEE DRF-334545

REVISION HISTORY

DESIGN PHASE:	
QUALITY LEVEL:	4
HORIZONTAL SCALE	NOTED
VERTICAL SCALE	NA
FOR DRAWING INDEX SEE DRAWING NO.	632165
SIGNATURES/DATES APPLY TO: CURRENT RELEASE ONLY	ISSUED
DESIGN: NA	
DRAFTER: A. KEY	
TECHNICAL CHECK: NA	
CM/T GROUP SUPERVISOR: NA	
DESIGN LEAD: NA	
DRAFTING CHECK/ EFFECTIVE DATE: K. KELLER	

Idaho Cleanup Project

INTEC CPP-1696
INTEGRATED WASTE TREATMENT UNIT

SITE EQUIPMENT ARRANGEMENT PLAN EL. 120'-0" AND ABOVE

PROJECT NUMBER 25051

DOE FORM 420.1 (08/2003)	DOE ORDER 420.1
SIZE E	DWG 632831
REV 3	
DRF NO. ---	SHEET P-82

© ICP/KAL

File: 632831-3.dwg
Path: V:\Wag\Drawings\
Date: 10/11/11 - 1:23 PM Layout: Normal
State: As Built 10-14-2011DRF-334545

APPENDIX II -
DIAGRAM PACKAGE

RCRA PERMIT

FOR THE

IDAHO NATIONAL LABORATORY

Volume 14
INTEC Liquid Waste Management System

Appendix II

Section D, Diagram Package

Revision Date: September 5, 2019

DIAGRAM PACKAGE

Drawing Number	Revision Number	Description
057498	Revision 29	CPP-604 TANK FARM PRIMARY WASTE COLLECTION AND STORAGE FACILITIES FLOWSHEET
057499 - Flowsheet 2 of 6	Revision 47	CPP PRIMARY WASTE COLLECTION AND STORAGE FLOWSHEET
094276 (Sheet 1 of 4)	Revision 65	CPP-604 P.E.W. EVAPORATORS PROCESS P&ID
096156	Revision 40	CPP-604 P.E.W. EVAPORATORS PROCESS COLLECTION TANKS P&ID
103308	Revision 10	CPP-604 SAMPLER FLOWSHEET WASTE STORAGE TANKS
103589	Revision 42	CPP-604 WASTE TREATMENT BUILDING DRAIN & SERVICE WASTE FLOWSHEET
133400	Revision 10	CPP-659 UTILITY FLOW DIAGRAM PROCESS & UTILITY DRAIN LINES @ LEVELS NO. 1, 2, AND 3 NWCF
133401	Revision 13	CPP-659 UTILITY FLOW DIAGRAM PROCESS & UTILITY DRAIN LINES @ LEVELS NO. 1, 2, AND 3 NWCF
133402	Revision 11	CPP-659 UTILITY FLOW DIAGRAM PROCESS & UTILITY DRAIN LINES @ LEVELS NO. 1, 2, AND 3 NWCF
133406	Revision 29	CPP-659 OUTSIDE YARD PIPING FLOW DIAGRAM
133407	Revision 25	CPP-659 OUTSIDE YARD PIPING FLOW DIAGRAM NWCF
133408	Revision 29	CPP-659 MECHANICAL P & ID HOT SUMP TANKS CELL NWCF
133409	Revision 31	CPP-659 MECHANICAL FLOW DIAGRAM HOT SUMP TANKS CELL NWCF
133410	Revision 35	CPP-659 NWCF MECHANICAL P & ID BLEND & HOLD CELL & VALVE CUBICLE SHEET 1 OF 4

DIAGRAM PACKAGE (continued)

Drawing Number	Revision Number	Description
133411	Revision 32	CPP-659 MECHANICAL FLOW DIAGRAM BLEND & HOLD CELL & VALVE CUBICLE NWCF
133412	Revision 32	CPP-659 NWCF MECHANICAL FLOW DIAGRAM BLEND & HOLD CELL & VALVE CUBICLE
133413	Revision 25	CPP-659 MECHANICAL FLOW DIAGRAM BLEND & HOLD CELL & VALVE CUBICLE NWCF
133417	Revision 22	CPP-659 MECHANICAL FLOW DIAGRAM CALCINER CELL & FLOW METER CUBICLE SHEET 4 OF 8 NWCF
133418	Revision 24	CPP-659 MECHANICAL FLOW DIAGRAM CALCINER CELL & FLOW METER CUBICLE SHEET 5 OF 8 NWCF
133420	Revision 43	CPP-659 MECHANICAL P & ID CALCINER CELL & FLOW METER CUBICLE NWCF SHEET 7 OF 8 NWCF
133423	Revision 29	CPP-659 MECHANICAL FLOW DIAGRAM OFFGAS CELL SHEET 2 OF 4 NWCF
133424	Revision 35	CPP-659 MECHANICAL FLOW DIAGRAM OFFGAS CELL NWCF SHEET 3 OF 4 NWCF
133425	Revision 24	CPP-659 MECHANICAL FLOW DIAGRAM OFFGAS CELL NWCF SHEET 4 OF 4 NWCF
133426	Revision 24	CPP-659 MECHANICAL FLOW DIAGRAM ADSORBER CELL & VALVE CUBICLE SHEET 1 OF 3 NWCF
133427	Revision 23	CPP-659 MECHANICAL FLOW DIAGRAM ADSORBER CELL & VALVE CUBICLE SHEET 2 OF 3 NWCF
133428	Revision 25	CPP-659 MECHANICAL FLOW DIAGRAM ADSORBER CELL & VALVE CUBICLE SHEET 3 OF 3 NWCF
134251 Sheet 1 of 5 Sheet 2 of 5 Sheet 3 of 5	 Revision 16 Revision 16 Revision 15	CPP-659 HIGH LEVEL LIQUID WASTE EVAPORATOR P & ID
176274	Revision 9	CPP-659 LET&D ACID RECYCLE SYSTEM PIPING & INSTRUMENTATION DIAGRAM

DIAGRAM PACKAGE (continued)

Drawing Number	Revision Number	Description
176275	Revision 7	CPP-659 LET&D ACID RECYCLE SYSTEM PIPING & INSTRUMENTATION DIAGRAM
179009	Revision 9	CPP-604 VESSEL VES-WL-150 P&ID
347791	Revision 2	CPP-1618 LIQUID EFFLUENT TREATMENT & TREATMENT FACILITY NOTES AND ABBREVIATIONS
356596 (Sheets 1-11)	Revision 48	CPP-1618 LIQUID EFFLUENT TREATMENT & TREATMENT FACILITY P&ID
368921	Revision 7	CPP-604 AND CPP-649 PWL COLLECTION SYSTEM PROCESS AND INSTRU. DIAGRAM DVB-OFG-DG-D5 VAULT
368922	Revision 10	CPP-604 AND CPP-649 PWL COLLECTION SYSTEM PROCESS AND INSTRU. DIAGRAM DVB-OFG-DG-D8 VAULT
368923	Revision 10	CPP-604 AND CPP-649 PWL COLLECTION SYSTEM PROCESS AND INSTRU. DIAGRAM APS PROCESS, BLDG 649
368924	Revision 11	CPP-604 AND CPP-649 PWL COLLECTION SYSTEM PROCESS AND INSTRU. DIAGRAM OFF GAS BLOWER CELL
368925	Revision 10	CPP-604 AND CPP-649 PWL COLLECTION SYSTEM P&ID OFF GAS FILTER CELL
368926	Revision 9	CPP-604 AND CPP-649 PWL COLLECTION SYSTEM P&ID SOUTH CELL

DIAGRAM PACKAGE (continued)

Drawing Number	Revision Number	Description
368927	Revision 15	CPP-604 AND CPP-649 PWL COLLECTION SYSTEM MODULE CELL P&ID
368928	Revision 8	CPP-604 AND CPP-649 PWL COLLECTION SYSTEM PUMP PAN ENCLOSURE P&ID
368929	Revision 13	CPP-604 PWL COLLECTION SYSTEM NORTH CELL P&ID
368930	Revision 14	CPP-604 AND CPP-649 PWL COLLECTION SYSTEM SEPARATION/CONDENSATION P&ID
368931	Revision 20	CPP-604, CPP-605, CPP-649, AND CPP-708 PWL COLLECTION SYSTEM PROCESS AND INSTRU. DIAGRAM MAIN STACK AND 161 EVAPORATOR CELL
IWTU		
632359	Revision 4	ARCH GENERAL ARRANGEMENTS PRODUCT STORAGE BUILDING FLOOR PLAN
632750	Revision 10	PROCESS FLOW DIAGRAM SODIUM BEARING WASTE TREATMENT CARBONATE HS CASE SHEET 1
632752	Revision 9	PROCESS FLOW DIAGRAM ADDITIVE FEED CARBONATE HS CASE SHEET 1
632753	Revision 9	PROCESS FLOW DIAGRAM SBW PRODUCT TRANSFER AND LOADOUT CARBONATE HS CASE SHEET 1
632754	Revision 9	PROCESS FLOW DIAGRAM PROCESS EXHAUST & BUILDING VENTILATION CARBONATE HS CASE SHEET 1
632755	Revision 18	RAPID SHUTDOWN SYSTEM (RSS) PROCESS FLOW DIAGRAM SHEETS 1-5 OF 5
632757	Revision 7F1	PIPING & INSTRUMENT DIAGRAM SYMBOLS AND NOMENCLATURE SHEET 2
632758	Revision 13F6	INTEC CPP-1696 INTEGRATED WASTE TREATMENT UNIT PIPING & INSTRUMENT DIAGRAM TYPICAL DETAILS
632759	Revision 7	PIPING & INSTRUMENT DIAGRAM SBW WASTE TRANSFER
632779	Revision 13	PIPING & INSTRUMENT DIAGRAM REFORMER ADDITIVES SHEET 1

DIAGRAM PACKAGE (continued)

Drawing Number	Revision Number	Description
632780	Revision 14	PIPING & INSTRUMENT DIAGRAM REFORMER ADDITIVES SHEET 2
632792	Revision 9	PIPING & INSTRUMENT DIAGRAM CANISTER HANDLING
632793	Revisions 11F2 and 12F1	PIPING & INSTRUMENT DIAGRAM SAMPLE TRANSFER
632797	Revision 13F4	PIPING & INSTRUMENT DIAGRAM PROCESS HEPA FILTERS
632798	Revision 20	PIPING & INSTRUMENT DIAGRAM MERCURY ADSORBERS
632799	Revision 24F6	PIPING & INSTRUMENT DIAGRAM PROCESS EXHAUST MONITORING AND DISCHARGE
632821	Revision 12	PIPING & INSTRUMENT DIAGRAM DRAINS AND SUMPS SHEET 1
632822	Revision 13	PIPING & INSTRUMENT DIAGRAM DRAINS AND SUMPS SHEET 2
635083	Revision 2	INTEC IWTU MODIFICATIONS TO NWCF VALVE CUBICLE P&ID
635084	Revision 4	INTEC IWTU MODIFICATIONS TO NWCF VALVE CUBICLE INSTALLATION PLAN
637285	Revision 5	INTEC IWTU INFRASTRUCTURE PIPING TIE-INS PROCESS LINE PLAN AND PROFILE
637293	Revision 4	INTEC IWTU MODIFICATIONS TO NWCF VALVE CUBICLE INSTALLATION PLAN SHEET 2
781895 (Sheets 1-2)	Revision 0	IWTU CANISTER FILLING & DECON CELL PRODUCT RECEIVER COOLER INNER RAIL ASSEMBLY
781896 (Sheets 1-2)	Revision 0	IWTU CANISTER FILLING & DECON CELL PRODUCT RECEIVER OUTER RAIL ASSEMBLY

DIAGRAM PACKAGE (continued)

Drawing Number	Revision Number	Description
632782	Revision 17	PIPING & INSTRUMENT DIAGRAM DMR ADDITIVE BIN
632787	Revision 25F1	PIPING & INSTRUMENT DIAGRAM PRODUCT RECEIVER AND CANISTER FILLING SHEET 1
632788	Revision 20	PIPING & INSTRUMENT DIAGRAM PRODUCT RECEIVER AND CANISTER FILLING SHEET 2
632790	Revision 16	PIPING & INSTRUMENT DIAGRAM PRODUCT COOLING
632791	Revision 13	PIPING & INSTRUMENT DIAGRAM CANISTER VACUUM
632818	Revision 9	PIPING & INSTRUMENT DIAGRAM STEAM DISTRIBUTION
570000 (Sheets 1-2)	Revision 4	CPP-1696 IWTU DMR CELL & FILLING STATION OGF BUNDLE CONFIGURATION & DETAILS
570001 (Sheets 1-2)	Revision 4	CPP-1696 IWTU DMR CELL & FILLING STATION PGF BUNDLE CONFIGURATION & DETAILS
632823	Revision 0	INTEC CPP-1696 IWTU P&ID SUMP TANK SYSTEM
804020 (Sheets 1-3)	Revision 1	INTEC CPP-1696 INTERGRATED WASTE TREATMENT UNIT DMR VESSEL MANWAY NOZZLE ASSEMBLY
808190 (Sheets 1-3)	Revision 0	INTEC CPP-1696 IWTU 4-PACK SUMP TANK ASSEMBLY
808191 (Sheets 1-6)	Revision 0	INTEC CPP-1696 IWTU 4-PACK SUMP TANK VES-SRC-133 ASSEMBLY
808192 Sheets 1-3)	Revision 0	INTEC CPP-1696 IWTU 4-PACK SUMP TANK SADDLE ASSEMBLY
808193 (Sheets 1-12)	Revision 0	INTEC CPP-1696 IWTU 4-PACK CLARIFIER ASSEMBLY VES-SRC-134

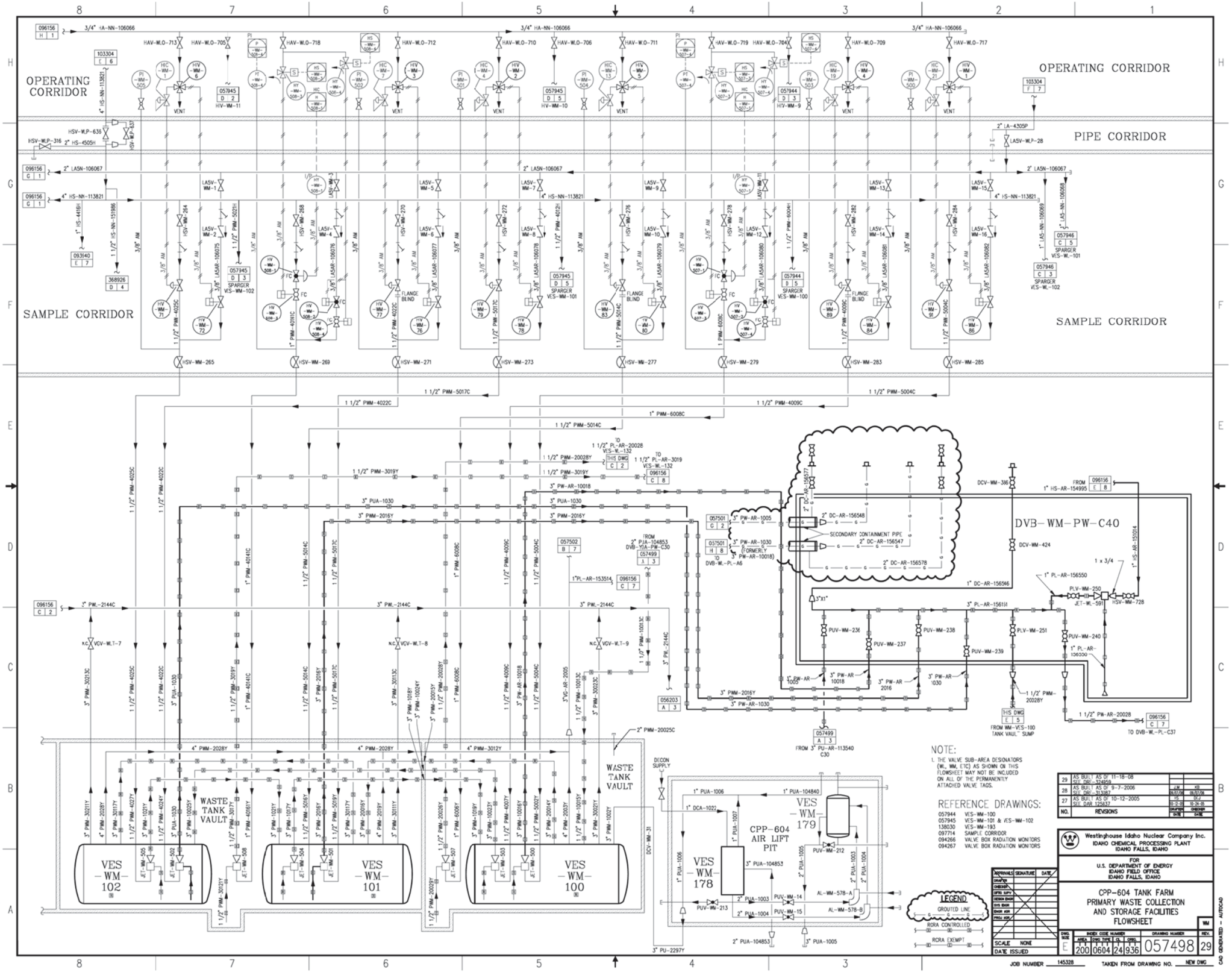

NOTE:

1. THE VALVE SUB-AREA DESIGNATORS (WL, WM, ETC) AS SHOWN ON THIS FLOWSHEET MAY NOT BE INCLUDED ON ALL OF THE PERMANENTLY ATTACHED VALVE TAGS.

REFERENCE DRAWINGS:

057944	VES-WM-100
057945	VES-WM-101 & VES-WM-102
138030	VES-WM-193
097714	SAMPLE CORRIDOR
094266	VALVE BOX RADIATION MONITORS
094267	VALVE BOX RADIATION MONITORS

NO.	REVISIONS	DRAFTER DATE	CHECKER DATE
29	AS BUILT AS OF 11-18-08 SEE DRF-324959		
28	AS BUILT AS OF 9-7-2006 SEE DRF-313087	JM 09/07/06	KB 09/07/06
27	AS BUILT AS OF 10-12-2005 SEE DAR 125837	HS 10-12-05	DJ 10-24-05

Westinghouse Idaho Nuclear Company Inc.
IDAHO CHEMICAL PROCESSING PLANT
IDAHO FALLS, IDAHO

FOR
U.S. DEPARTMENT OF ENERGY
IDAHO FIELD OFFICE
IDAHO FALLS, IDAHO

CPP-604 TANK FARM
PRIMARY WASTE COLLECTION
AND STORAGE FACILITIES
FLOWSHEET

APPROVALS	SIGNATURE	DATE
DRAFTER		
CHECKER		
OPTIO SUPV		
DESIGN ENGR		
SYS ENGR		
ENGR MGR		
PROJ MGR		

SCALE NONE
DATE ISSUED

DWG. SIZE	INDEX CODE NUMBER AREA	DWG TYPE	CL	ORIG.	DRAWING NUMBER	REV.
E	200	0604	24	936	057498	29

JOB NUMBER 145328 TAKEN FROM DRAWING NO. NEW DWG

CAD GENERATED - AUTOCAD

File: 057498-29.dwg Date: 02/23/09 - 2:30 PM Layout Name: Layout1 ID: WRDCC
Path: K:\Tank Farm Closure Project\Controlled DWGS\As-Built 1-14-09

FMT-D1-ICP REV 2016-08-02

REVISIONS	
REV	DESCRIPTION
47	PRIOR HISTORY REMOVED, UPDATED TITLE BLOCK AS-BUILT AS OF 12/15/2016, SEE DRF-352546

CPP-628

UA WM-101-B5 · UA WM-101-A5 · UA WM-101-D5 · UA WM-101-C5

LSHH -WM-191 · LSH -WM-191 · LR -WM-191

LT -WM-191 · RIA -WM-191-2 · RR -WM-191 · RIA -WM-191-1

IN CPP-601 V-CELL UA-V2

TAL -WM- · RA -WM-191-1 · LAH -WM-191-2

RAH -WM-191-1 · HORN

LIGHT OUTSIDE DOOR TO CPP-750 · RED

FROM CPP-750 ON-LINE MONITOR RE-YDA-750-1 → 092475 B 2

TIMER BOX 300 SEC. DURATION

CPP-763

VES-WM-191

RE -WM-191-2 · RAH -WM-191-2 · AREA HEATERS · TC

RAH -WM-191-1 · RE -WM-191-1 · HORN · TSL -WM- · LSH -WM-191-2 · DRAIN

6" PLA-105556 · 3" PLA-105557

SERVICE WASTE → 092475 D 3

DVB-WM-SW-D1

6" PLA-100164 · SWV-WM-13 · 3" PLA-105558 · SWV-WM-14 · SWV-WM-12

6" PLA-105556

092475 D 4 → OFF · HS -WM-191

DVB-WM-SW-D2

PLV-WM-80 · S · HY -WM-191 · PCV -WM-54 · HAV-WM-50 · O.T.A. · PI

RCV -WM-191

3" PLA-105559

PI · 1/4" · 1" HAN-105560 · HAV-UTI-5504 → 056382 D 6

BEECH ST. TUNNEL · HAV-WM-51 · 1 1/2" HAA-101648 → 092475 C 8

DVB-WM-SW-D3

SWV-WM-16 · TSL · OR · SWV-WM-17 · TSL

DVB-WM-PW-C32 SEE DWG 094227

3" PLA-110205 · HV -WM-38 · 3" PWL-113801 · 3" PLAR-113800 · 3" PLAR-113801 · 3" PLA-110206 · HV -WM-39 · 1 1/2" PL-AR-155401 · 3" PWL-113800 · 3/4" PL-AR-155004 · 1" PL-AR-155003 · HV -WM-231 · HV -WM-609 · 3/4" HS-AR-154997 → 096156 C 7 · 103304 D 8

3/4" PL-AR-155005 · PLV-WM-233 · DCV-WM-409 · HV -WM-37 · PLV-WM-247 NO · PLV-WM-234 · 1 1/2" PL-AR-155400 · PLV-WM-246 NO · HV -WM-36 · DCV-WM-410 · JET-WM-540 · STRAINER · 1" HS-AR-154995 → 096156 E 8

1 1/2"-PL-AR-155565 → 096156 B 5

1 1/2"PL-AR-155563 → 103589 E 8

HSV-YDA-257 · HSV-WM-258 · VC -WM-C30

DVB-YDA-PW-C29 · DVB-C-39 · DVB-WM-PW-C30

VES -WM-196 · RCV -WM-196 · 1" VG-AR-113543 · 1/4" LAAR-113544 → 103304 H 5 · 1/4" LAAR-113545 → 103304 H 5 · TO 3" PUA-1005

3/4" HSA-104856 · 1" VGAR-113542 · 2" PU-AR-113540 · 3" PU-AR-113540 → 057498 C 3 · TO 1 1/2" PWM-10013C → 057498 D 4

PUV-WM-327 · PUV-WM-328 · PUV-WM-335 · PUV-WM-336 · 1" PUA-104855 · PUV-WM-324

OOS LSH -WM-C30 · OOS LAH -WM-C30

1 1/2" PLA-776 (ABANDONED) · 1/2" PLA-100397 (ABANDONED) → 093025 A 8 · 056612 A 4

PLV-YDA-33

DVB-YDA-PL-C33

AIR GAPPED & PLUGGED IN CPP-601 · 3" PLA-110205 · 3" PLA-110206

PLV-YDA-21 · PLV-YDA-23 · PLV-YDA-22 · PLV-YDA-24 · PLV-YDA-25 · 1" PLA-104858

3/4" HSA-104857 · 2" PLA-110207 · 2" PUA-104854 · 2" PUA-104853

PUV-YDA-331 · PUV-YDA-332 · PUV-YDA-333 · CLOSED · PUV-YDA-329 · PUV-YDA-334 · PUV-YDA-330 · CLOSED · PUV-YDA-325 · PUV-YDA-326

VALVE HANDLES REMOVED JET-YDA-531-4 · JET-YDA-529-4

DVB-YDA-PW-C31 ABANDONED

2" PUA-104853 · 2" PUA-104854 · AIR GAPPED AND PLUGGED IN CPP-601

2" PUA-104854 · 2" PUA-104853

2" PWA-1560 · JET-WM-530-4 · 1 1/2" PWA-1561

2" PWA-1560 · 1 1/2" PWA-1561

2" PL-AR-108760 · 142709 F 6 FROM VES-FT-134 · 2" PL-AV-8603

DVB-SAA-PL-C27

PLV-FE-117

2" PL-AR-108760 · 2" PLA-104803 (ABANDONED) · 056612 A 4

2" PLA-104803 · AIR GAPPED IN CPP-641 VAULT

3/4" HSA-104850 · HSV-YDB-123 · PUV-YDB-217 · HSV-YDB-124

DVB-YDB-PW-C28

2" PWA-1560 · 1" PLA-104851 · PLV-YDB-124 · PLV-YDB-125 · FR -YDB-102 · F · PLV-YDB-122 · PLV-YDB-121 · JET-YDB-502

OOS LSH -YDB-28 · OOS LAH -YDB-28

1 1/2" PWA-1561 · AIR GAPPED AND PLUGGED IN CPP-641 VAULT

2" PWA-1560

NOTE:

1. THE VALVE SUB-AREA DESIGNATORS (WL, WM, ETC.) AS SHOWN ON THIS FLOWSHEET MAY NOT BE INCLUDED ON ALL OF THE PERMANENTLY ATTACHED VALVE TAGS.

REFERENCE DRAWINGS:

094266	VALVE BOX RADIATION MONITORS
094267	VALVE BOX RADIATION MONITORS
094227	DVB-WM-PW-C32

LEGEND

RCRA CLOSURE · RCRA EXEMPT · RCRA CONTROLLED · RCRA CLOSURE COMPLETE

GROUTED IN PLACE

OOS - OUT OF SERVICE

SIGNATURES/DATES APPLY TO CURRENT RELEASE ONLY	SIGN AND DATE
DESIGN: NA	– –
DRAFTER: J. WILLIAMS	Jason Williams Portage 2016.12.20 10:47:54 -07'00'
TECHNICAL CHECK: NA	– –
ENG GROUP SUPERVISOR: NA	– –
DESIGN LEAD/AUTHORITY: J. BRYANT	Jeffrey W. Bryant Fluor Idaho 2016.12.20 13:06:39 -07'00'
DRAFTING CHECK/ EFFECTIVE DATE: K. KELLER	Kris Keller Fluor Idaho 2016.12.20 13:10:11 -07'00'
PROJECT NUMBER:	
DRF NUMBER: 106032	

Idaho Cleanup Project Fluor IDAHO

CPP-AREA TANK FARM
CPP PRIMARY WASTE COLLECTION AND STORAGE FACILITIES
FLOWSHEET SHT. 2 OF 6

SIZE	INDEX CODE NUMBER				DWG-	REV
	AREA	TYPE	CL	ORIG		
D	200	0300	24	266	057499	47

SCALE: NONE · SHEET 1 OF 1

ID: WILLIJT · Layout Name: Model · Date: 12/15/16 – 12:04 PM · File: 057499-46.dwg · Path: K:\INTEC Misc\DRF-352546

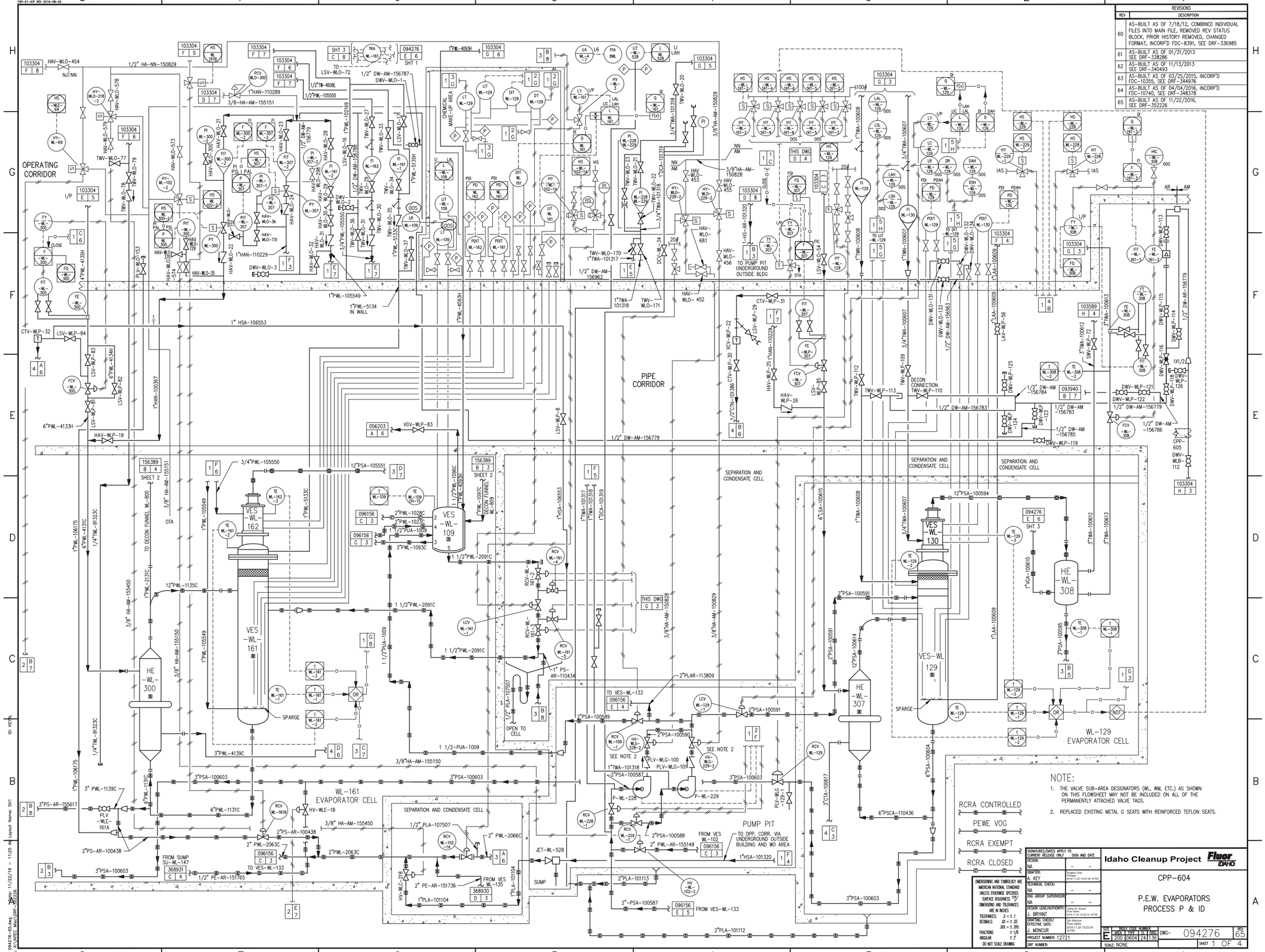

REVISIONS	
REV	DESCRIPTION
60	AS-BUILT AS OF 7/18/12, COMBINED INDIVIDUAL FILES INTO MAIN FILE, REMOVED REV STATUS BLOCK, PRIOR HISTORY REMOVED, CHANGED FORMAT, INCORP'D FDC-8391, SEE DRF-336985
61	AS-BUILT AS OF 01/31/2013 SEE DRF-338286
62	AS-BUILT AS OF 11/13/2013 SEE DRF-340493
63	AS-BUILT AS OF 03/25/2015, INCORP'D FDC-10355, SEE DRF-344976
64	AS-BUILT AS OF 04/04/2016, INCORP'D FDC-10740, SEE DRF-348378
65	AS-BUILT AS OF 11/22/2016, SEE DRF-352226

NOTE:

1. THE VALVE SUB-AREA DESIGNATORS (WL, WM, ETC.) AS SHOWN ON THIS FLOWSHEET MAY NOT BE INCLUDED ON ALL OF THE PERMANENTLY ATTACHED VALVE TAGS.
2. REPLACED EXISTING METAL G SEATS WITH REINFORCED TEFLON SEATS.

DIMENSIONING AND SYMBOLOGY ARE AMERICAN NATIONAL STANDARD UNLESS OTHERWISE SPECIFIED
SURFACE ROUGHNESS 125/
DIMENSIONS AND TOLERANCES ARE IN INCHES
TOLERANCES: .X = ± .1
DECIMALS: .XX = ± .03
.XXX = ± .010
FRACTIONS ± 1/8
ANGULAR ± 2°
DO NOT SCALE DRAWING

SIGNATURES/DATES APPLY TO CURRENT RELEASE ONLY	SIGN AND DATE
DESIGN: NA	– –
DRAFTER: A. KEY	Angela L Key Fluor Idaho 2016.11.22 14:27:36 -07'00'
TECHNICAL CHECK: NA	– –
ENG GROUP SUPERVISOR: NA	– –
DESIGN LEAD/AUTHORITY: J. BRYANT	Jeffrey W. Bryant Fluor Idaho 2016.11.22 15:22:14 -07'00'
DRAFTING CHECK/ EFFECTIVE DATE: J. MONCUR	Jim Moncur Fluor Idaho 2016.11.22 15:23:24 -07'00'
PROJECT NUMBER: 12721	
DRF NUMBER:	

Idaho Cleanup Project Fluor IDAHO

CPP-604

P.E.W. EVAPORATORS
PROCESS P & ID

SIZE	AREA	TYPE	CL	DWG	REV
E	200	0604	24	136	65

DWG- 094276

SCALE: NONE

SHEET 1 OF 4

File: 094276-65.dwg Date: 11/22/16 - 11:25 AM Layout Name: SH1
Path: K:\INTEC Misc\DRF-352226
ID: KEYNL

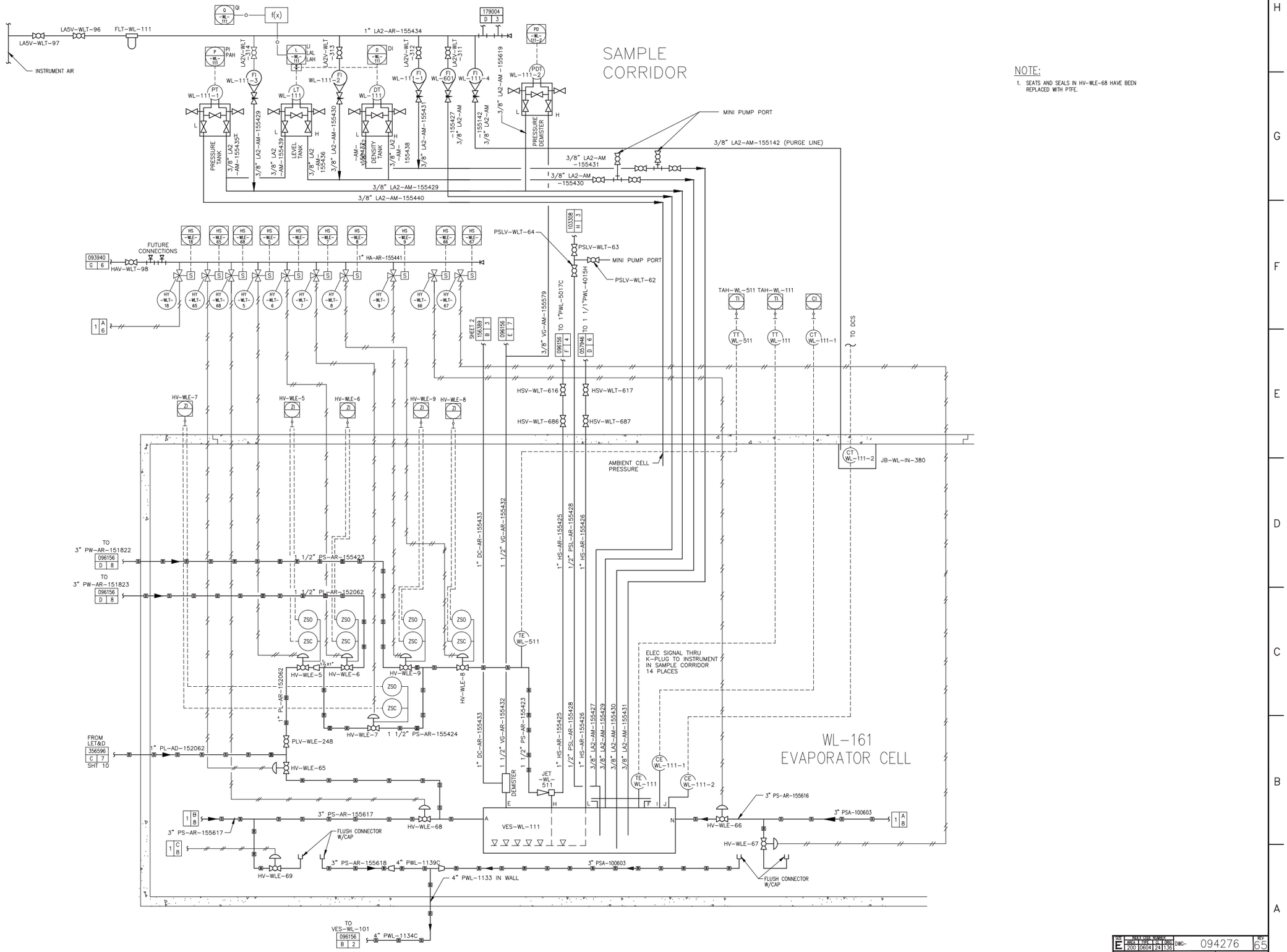

SIZE	DRAW. NUMBER			REV
E	WFA 1 1406	LA 1 2800	DWG- 094276	65
SCALE: NONE			SHEET 2	

FWT-E2-ICP REV 2016-08-02

Date: 11/22/16 - 11:25 AM Layout Name: SH2
File: 094276-65.dwg
Path: K:\UNTEC Mss\ORF-35226
ID: KEN

File: 094276-65.dwg Date: 11/22/16 - 11:25 AM Layout Name: SH3
Path: K:\INTEC Misc\DRF-352226
ID: KEYAL

PWT-E2-ICP REV 2016-08-02

CPP-605

ACCESS CORRIDOR

EVAPORATOR CELL

OPERATING CORRIDOR

VES-WL-155

VES-WL-156

VES-WL-165

VES-WL-166

FROM HIV-WLB-219 103304 F 2

1" HIN-301

TO ATMOS. 2"SWA-106450

1 1/2"SWA-106450

379428 H 3

1 1/2"PWL-2069C

1/2"DCA-151514

156389 C 6 SHT 2

1/2"DC-AR-152487

1 1/2"PWL-4153H FROM WLL-195

1/2" PL-AR-157394

1 1/2" PWL-40231C

SHT 10 356596 B 6

1" PL-AR-152072

1 1/2" PWL-2069C

TO VES WLK-197 SHT 10 356596 C 4

056204 F 8 FROM PEV-WLB-99

3/4"-PL-AR-155939

1 1/2" PL-AR-152011

1 1/2" PWL-40231C

368927 D 3 TO VES WL-133

103304 D 7

1 1/2"HAN-110796

103304 E 6

1 1/2"HSN-100429

ABANDONED IN PLACE

HIGH POINT VENT

1" F/2"PL-AR-151733 ABANDONED IN PLACE

092476 D 8

CPP-605 WEST WALL

1 1/2" PWL-2069C

3" PLA-2069C

1 1/2 PLA-2069C

092470 D 8

SWV-WLB-70

1 1/2"PWL-2067C

FROM VES WL-163, 106 & 107

1/4"PLA-106449

CTV-WLO-17 CTV-WLO-16 1/4"PLA-106449

094747

HAV-WLO-34

LI5V-WLO-17

LI5V-WLO-18

VGV-WLP-21

VGV-WLP-20

OTA

1 1/2" VGA-104975

1 1/2" VGA-110845

1 1/2"PWL-4153H

1"PWL-4157C

3/4"CTA-100189

3"PWL-4139C

3" CTA-100617

3"CTA-110201

3"CTA-110202

1"VGA-110203

1 1/2" HAN-110216

1 1/2" HSN-100429

3/4"CTA-100189

1/2"CTN-101386

2 1/2"CTA-110204

1 1/2"CTA-110204

1/2" PWL-2067C

PLV-WLA-245

CONT. FROM HE-WN-304 (SUPERHEATER)

093940 A 4 50 # INSTR. AIR

INSTR. AIR

LUBRICATOR

ABANDONED IN PLACE

1/2 CT-AR-155561

TO VES-WL-150 179008 B 4

094747

File: 094276-65.dwg
Path: K:\WATEC Mas\DWG\
Date: 11/22/16 - 11:25 AM Layout Name: SH4
ID: KCYNL

OPERATING CORRIDOR

PIPE CORRIDOR

SAMPLE CORRIDOR

REFERENCE DRAWINGS:

057946	VES-WL-101/102
057947	VES-WL-132/133
095316	DVB-WL-PL-C37
094266	VALVE BOX RADIATION MONITORS
094267	VALVE BOX RADIATION MONITORS

RCRA CLOSURE

RCRA EXEMPT

RCRA CONTROLLED

RCRA CLOSURE COMPLETE

NOTES:

THE VALVE SUB-AREA DESIGNATORS (WL, WM ETC) AS SHOWN ON THIS FLOWSHEET MAY NOT BE INCLUDED ON ALL OF THE PERMANENTLY ATTACHED VALVE TAGS.

NO.	REVISIONS	DRAFTER DATE	APPROVED DATE
40	AS-BUILT AS OF 03/25/2015, INCORP'D FDC-10355, SEE DRF-344976	JM 4/29/2015	KJK 4/29/2015
39	AS-BUILT AS OF 05/22/2013 SEE DRF-339241	BC 5/23/13	KJK 5/23/13
38	AS-BUILT AS OF 05/01/2013 SEE DRF-339090	BC 5/1/13	KJK 5/20/13
37	AS-BUILT AS OF 01/31/2013 REMOVED PRIOR HISTORY, SEE DRF-338286	JM 2/19/13	KK 2/19/13

Westinghouse Idaho Nuclear Company Inc.
IDAHO CHEMICAL PROCESSING PLANT
IDAHO FALLS, IDAHO

FOR
U.S. DEPARTMENT OF ENERGY
IDAHO FIELD OFFICE
IDAHO FALLS, IDAHO

CPP-604
P. E. W. EVAPORATORS
COLLECTION TANKS
P & ID

APPROVALS	SIGNATURE	DATE
DRAFTER	Nelson	09/01/93
CHECKER	H.SPENCER	11/17/93
DFTG SUPV	G.T.W.	11/23/93
DESIGN ENGR	D.MEDHAM	11/17/93
SYS ENGR	J.WOODARD	11/22/93
ENGR MGR	N/A	
PROJ MGR	N/A	

SCALE NONE

DATE ISSUED GTW 11/23/93

DWG. SIZE: E | INDEX CODE NUMBER: AREA 200, DWG. TYPE 0604, SI 24, ORIG. 936 | DRAWING NUMBER: 096156 | REV.: 40

JOB NUMBER 145328

TAKEN FROM DRAWING NO. NEW DWG

CAD GENERATED - AUTOCAD

File: 096156-40.dwg
Path: K:\Cognizant\Checked\ Review\Vector_Art\096156\096156

Date: 04/29/15 - 2:42 PM
Layout: Layout1
Model
ID: Kd1

RCRA EXEMPT

NOTE:

1. THE VALVE SUB-AREA DESIGNATORS (WL, WM, ETC.) AS SHOWN ON THIS FLOWSHEET MAY NOT BE INCLUDED ON ALL OF THE PERMANENTLY ATTACHED VALVE TAGS.

Companion Flowsheets
542-41-P371 Waste Evap. 103299
542-41-P372 Storage Tks. 103300
542-41-P379 Tank Farm 103305

NO.	REVISIONS	DFTSM / DATE	APVD / DATE
10	AS BUILT AS OF 12-19-06 SEE DRF 315739	RCH 12-19-06	EEE 1-2-2007
9	AS BUILT AS OF 01-08-2000 SEE DAR 71524	HS 01-08-01	LDW 02-08-2001

THIS DRAWING [illegible] AS
PER OFFICIAL USE ONLY

APPROVALS
SIGNATURE AND DATE

OAK RIDGE	FOSTER WHEELER	IDAHO
[illegible]		

This Drawing is the Property of the
FOSTER WHEELER CORPORATION
165 BROADWAY, NEW YORK

AND IS LENT WITHOUT CONSIDERATION OTHER THAN THE BORROWER'S AGREEMENT THAT IT SHALL NOT BE REPRODUCED, COPIED, LENT, OR DISPOSED OF DIRECTLY OR INDIRECTLY NOR USED FOR ANY PURPOSE OTHER THAN THAT FOR WHICH IT IS SPECIFICALLY FURNISHED. THE APPARATUS SHOWN IN THE DRAWING IS COVERED BY PATENTS.

WL
WM

CPP 604
SAMPLER FLOWSHEET
WASTE STORAGE TANKS

U.S. ATOMIC ENERGY COMM.
ARCO IDAHO

INDEX CODE NUMBER				
AREA	DWG TYPE	CL.	ORIG.	SERIAL
200	0604	24	291	103308

DRAWN BY: COSTA | SCALE: NONE = 1'-0" | EST. NO.

RC-542 | DWG. N0542-11-P382 | 10

THIS DRAWING SUPERSEDED BY
THIS DRAWING SUPERSEDES
CAD OVERLAY DRAWING

PM AREA

EXHAUST AIR DUCT

PIPING CORRIDOR

OPERATING CORRIDOR

SAMPLE CORR.

ACCESS CORRIDOR

EXHAUST FAN ROOM

TANK VAULT

VENT LINE

VENT TO ROOF

D-503 SEPTIC TANK

CPP-605 NORTH

CPP-605 SOUTH

WL-161 LIQUID EVAPORATION ROOM

SEPARATION & CONDENSATION ROOM

NORTH GAS CELL

MIDDLE GAS CELL

SOUTH GAS CELL

OFF-GAS FILTER ROOM

OFF-GAS FAN ROOM

NO.	REVISIONS	DRAFTER DATE	CHECKER DATE	SYS ENGR DATE
43	AS BUILT AS OF 3/25/2015, INCORP'D FDC-10355, SEE DRF-344976	JM 4/29/2015	KK 4/29/2015	
42	AS BUILT AS OF 8/16/2012 SEE DRF-337141	KS 8-22-12	DM 9-4-2012	
41	AS BUILT AS OF 09-01-2010 SEE DRF-331017	HS 9-15-10	EEE 9-15-2010	
40	AS BUILT AS OF 2-17-09 SEE DRF-324939	CCW 2-24-09	GKM 2-24-09	
39	AS BUILT AS OF 4-14-05 SEE DAR 122965	VKJ 4-14-05	DEJ 06-02-05	
38	REMOVED DWG AFFECTED BY STATEMENT AS BUILT AS OF 1-4-05, SEE DAR 118788	DEJ 1-4-05	DEJ 1-13-05	

Westinghouse Idaho Nuclear Company Inc.
IDAHO CHEMICAL PROCESSING PLANT
IDAHO FALLS, IDAHO

FOR
U.S. DEPARTMENT OF ENERGY
IDAHO OPERATIONS OFFICE
IDAHO FALLS, IDAHO

CPP-604
WASTE TREATMENT BUILDING
DRAIN & SERVICE WASTE
FLOWSHEET

APPROVALS	SIGNATURE	DATE
DRAFTER		
CHECKER		
DFTG SUPV		
DESIGN ENGR		
SYS ENGR		
ENGR MGR		
PROJ MGR		

SCALE NONE
DATE ISSUED

RCRA CONTROLLED
RCRA EXEMPT
RCRA CLOSURE

DWG. SIZE	INDEX CODE NUMBER: AREA	DWG TYPE	CI	ORIG.	DRAWING NUMBER	REV.
F	200	0604	24	936	103589	42

JOB NUMBER 106032

TAKEN FROM DRAWING NO.

CAD GENERATED - AUTOCAD

File: 103589-43.dwg
Path: K:\INTEC Misc\DRF-344976

ID: (KS)

Date: 4/29/15 - 2:43 PM Layout Name: Model

FMT-D1-ICP REV 2017-02-28

REVISIONS	
REV	DESCRIPTION
10	AS-BUILT AS OF 7/18/17. UPDATED TITLE BLOCK. REMOVED PRIOR REV. HISTORY. INC. FDC-11064. SEE DRF-355333.

3"-PLAD-4250
FLOOR DRAINS FROM CALCINER SUPPLY AIR PLENUM ROOM (ABOVE 1ST LEVEL)
3"-PLAD-4251
3"
PL-34
3"-PLAD-4233
FLOOR DRAINS FROM CALCINER EXHAUST AIR PLENUM ROOM 1ST LEVEL
PL-35
STAIRWELL NO 2
3"-PLAD-4233
FLOOR DRAINS FROM DECON EXHAUST AIR PLENUM ROOM 1ST LEVEL
3"-PLAD-4233
3"-PLAD-4233
ENTRY
ACCESS CORRIDOR
THIS WALL OUTLINES CALCINER BLDG @ 1,2 & 3 LEVEL
MANIPULATOR PARKING & MAINTENANCE AREA
F-NCC-130-4
F-NCC-130-3
F-NCC-130-2
F-NCC-130-1
FD FROM LEVEL NO 2
3"-PLAD-4255
GD
2"-PLAD-4213
SLOPE
FILTER CELL
GD
3"-PLAD-4212
SLOPE
FROM VES NCC-112, 113, 114
FROM HE NCC-334, 335
3"-PLAD-4218
3"-PLAD-4217
2"-PWAD-2025
SLOPE
SLOPE
SLOPE
FROM VES NCC-116
FROM VES NCC-101, 102, 103
3"-PLAD-4219
3"-PLAD-4220
2"-PLAD-1726
3"-PLAD-4221
3"-PLAD-4222 SPARE
3"-PLAD-4223
3"-PLAD-1824
3"-PLAD-4224
3"-PLAD-4225
3"-PLAD-4226
3"-PLAD-4227 SPARE
1"-PLAD-1921
2"-PLAD-1923
2"-PLAD-2861
FROM VES NCC-108
FROM VES NCC-110
MATCH LINE SEE DRAWING 133401
FROM HE-NCC-351
① DRN TO VES-NCC-122 SEE SWG 133408 SECT 5 & 6
② DRN TO VES-NCC-119 SEE SWG 133409 SECT 1 & 2
DECON HOLD-UP TANK CELL
VES-NCD-123
FM VALVE PIT
133399 C 10
2"-PLAD-4209
GD
3"-PLAD-4215
GD
VES-NCD-129
SLOPE
3"-PLAD-4215
P-NCD-223
P-NCD229
SLOPE
3"-PLAD-4215
PUMP ROOM
133435 A 6 GUTTER DRN FM OFF-GAS BLOWER CELL @ LEVEL NO 2
SLOPE
3"-PLAD-4214
133435 A 5 DRN FM OFF GAS BLOWERS BLO-NCC-243-1 243-2 & 242 @ LEVEL NO 2
CURB
DECON COLLECTION TANK CELL
HOT SUMP TANK REMOVAL CELL & VALVE OPERATING AREA
LUBE OIL CONSOLE ROOM
CON-NCC-943-1
CON-NCC-943-2
SLOPE
1"-PLAD-2366
P-NCC-231
SLOPE
SLOPE
SLOPE
3"-PLAD-4234
3"-PLAD-4233
6"-PLAD-4230
133401 A 6
ACCESS CORRIDOR
STAIRWELL NO 3
RCRA CONTROLLED
RCRA EXEMPT

ALLIED CHEMICAL CORPORATION
IDAHO CHEMICAL PROGRAMS - OPERATIONS OFFICE
IDAHO FALLS, IDAHO
THIS DOCUMENT IS RELEASED _____
AND SUBSEQUENTLY CONTROLLED IN ACCORDANCE WITH ACC STANDARD PRACTICES

SIGNATURES/DATES APPLY TO CURRENT RELEASE ONLY	SIGN AND DATE
DESIGN: NA	– –
DRAFTER: S. BERTHELSON	Shawn Berthelson Fluor Idaho 2017.08.15 09:41:00 -06'00'
TECHNICAL CHECK: NA	– –
ENG GROUP SUPERVISOR: NA	– –
DESIGN LEAD/AUTHORITY: B. PREUSSNER	Brian Preussner Fluor Idaho 2017.08.16 16:10:41 -06'00'
DRAFTING CHECK/ EFFECTIVE DATE: J. MONCUR	Jim Moncur Fluor Idaho 2017.08.17 07:09:12 -06'00'
PROJECT NUMBER:	
DRF NUMBER:	

Idaho Cleanup Project Core — Fluor IDAHO

CPP-659 NEW WASTE CALCINING FACILITY UTILITY FLOW DIAGRAM PROCESS & UTILITY DRAIN LINES @ LEVELS NO. 1, 2 & 3

SIZE	INDEX CODE NUMBER AREA	TYPE	CL	ORIG	DWG-	REV
D	200	0659	28	287	133400	10
	SCALE: NONE				SHEET 1 OF 1	

Title: 133400-10.DWG
Path: K:\Dropbox\Berthelson\DRF-355333\133400-10
Date: 08/15/17 - 9:32 AM
Layout Name: Layout1
ID: BSL

FMT-01-ICP REV 2017-02-28

REVISIONS	
REV	DESCRIPTION
13	AS-BUILT AS OF 7/18/17. UPDATED TITLE BLOCK. REMOVED PRIOR REV. HISTORY. INCORP. FDC-11064. SEE DRF-355333.

3"-PLAD-4233
3"-PLAD-4233
SLOPE
3"-PLAD-4248
3"-PLAD-4243
FLOOR DRAIN FROM CALCIUM NITRATE ROOM 1ST LEVEL
FLOOR DRAIN FROM CORRIDOR @ LEVEL No. 2
NORTH ACCESS CORRIDOR
133441 A 5
F.D
3"-PLAD-4244
TO VES-NCC-122
ADSORBER VALVE CUBICLE
133428 A 3
FROM VES NCC-116
1"-PWAD-110352
S.G.D.
G.D.
G.D.
P-NCC-210
BLEND & HOLD VALVE CUBICLE
AIR LIFT PIT
DRAIN FM. ADSORBERS VES-NCC-112, 113, 114
133426 A 9
3"-PLAD-4218
3"-PLAD-4217
2"-PWAD-2025
G.D.
133426 A 8
DRAIN FM SHTR 334,-335
1"-PLAD-110351
ADSORBER CELL
VES-NCC-112
VES-NCC-113
3"-PLAD-4220
3"-PLAD-4219
SLOPE
3"-PLAD-4219
3"-PLAD-4220
BLEND & HOLD CELL
VES-NCC-102
VES-NCC-103
DRN. FM. BLEND & HOLD TANKS VES-NCC-101, 102 & 103
133412 A 4
2"-PWAD-1726
VES-NCC-104
TO VES NCC-119
SLOPE 3"-PLAD-4219
SLOPE 3"-PLAD-4220
SLOPE 2"-PWAD-1726
HE-NCC-335
SLOPE 3"-PLAD-4221
SLOPE 3"-PLAD-4222
SLOPE 3"-PLAD-4223
SLOPE 3"-PWAD-1824
SLOPE 3"-PLAD-4224
SLOPE 3"-PLAD-4225
SLOPE 3"-PLAD-4226
SLOPE 3"-PLAD-4227
SLOPE 1"-PWAD-1921
SLOPE 2"-PWAD-1923
SPARE
HE-NCC-336
HE-NCC-334
VES-NCC-136
SPARE
133425 (SHT) B 3
COND. FM HE-NCC-351
1½ PW-AR-108261
VES-NCC-101
3"-PLAD-4222 SPARE
3"-PLAD-4223
3"-PWAD-1824
G.D
S.G.D.
3"-PLAD-4226
3" PLAD-4227 SPARE
TO VES NCC-119
AD-2061
133458 A 12
VES-NCC-116
VES-NCC-114
HE-NCC-333
HE-NCC-332
VS-NCC-111
VES-NCC-111
VES-NCC-109
VES-NCC-110
OFF-GAS CELL
P-NCC-208-1
P-NCC-208-2
VES-NCC-108
G.D
S.G.D.
SAMPLE CAVE (2ND LEVEL)
VENTILATION EXHAUST DUCT
ENTRY CORRIDOR
S.D.
DRN. FM. SCRUB HOLD TANK VES-NCC-108
133424 A 6
DRN. FM. MIST ELIMINATOR VES-NCC-110
133425 A 2
CONTROLLED CLASS 1 DOCUMENT
133400 A 7
2"-PLAD-4230
3"-PLAD-4233
3"-PLAD-4244
SLOPE
3"-PLAD-4233
3"-PLAD-4244
3"-PLAD-4233
133402 A 3
ABOVE FLOOR
3"-PLAD-4244
3"-PLAD-4235
F.D.
FLOOR DRN. FM. CORRIDOR @ LEVEL No. 2
RCRA EXEMPT
RCRA CONTROLLED
4234-4233
3"-PLAD-4234
DRAIN FROM MEN'S & WOMEN'S CHANGE AREA & TOILET RM. & H.P. OFFICE @ LEVEL NO. 1
FLOOR DRAIN FM. UTILITY ROOM @ LEVEL No. 2
1"-SW-NN-155920
133407 C 5
SOUTH ACCESS CORRIDOR

ALLIED CHEMICAL CORPORATION
IDAHO CHEMICAL PROGRAMS - OPERATIONS OFFICE
IDAHO FALLS, IDAHO
THIS DOCUMENT IS RELEASED 9-20-72
AND SUBSEQUENTLY CONTROLLED IN ACCORDANCE WITH ACC STANDARD PRACTICES.

SIGNATURES/DATES APPLY TO CURRENT RELEASE ONLY	SIGN AND DATE
DESIGN: NA	– –
DRAFTER: S. BERTHELSON	Shawn Berthelson Fluor Idaho 2017.08.15 10:59:13 -06'00'
TECHNICAL CHECK: NA	– –
ENG GROUP SUPERVISOR: NA	– –
DESIGN LEAD/AUTHORITY: B. PREUSSNER	Brian Preussner Fluor Idaho 2017.08.16 16:11:56 -06'00'
DRAFTING CHECK/ EFFECTIVE DATE: J. MONCUR	Jim Moncur Fluor Idaho 2017.08.17 07:08:57 -06'00'
PROJECT NUMBER:	
DRF NUMBER:	

Idaho Cleanup Project Core Fluor IDAHO

CPP-659
NEW WASTE CALCINING FACILITY
UTILITY FLOW DIAGRAM
PROCESS & UTILITY DRAIN LINES
@LEVELS NO. 1, 2 & 3

SIZE	INDEX CODE NUMBER				DWG-	REV
	AREA	TYPE	SEQ	ORIG		
D	200	0659	24	287	133401	13
SCALE: NONE					SHEET 1 OF 1	

File: 133401-13.DWG Path: K:\Dropbox\Berthelson\DRF-355333\133401-13 Date: 08/15/17 - 9:42 AM Layout Name: Layout1 ID: BSL

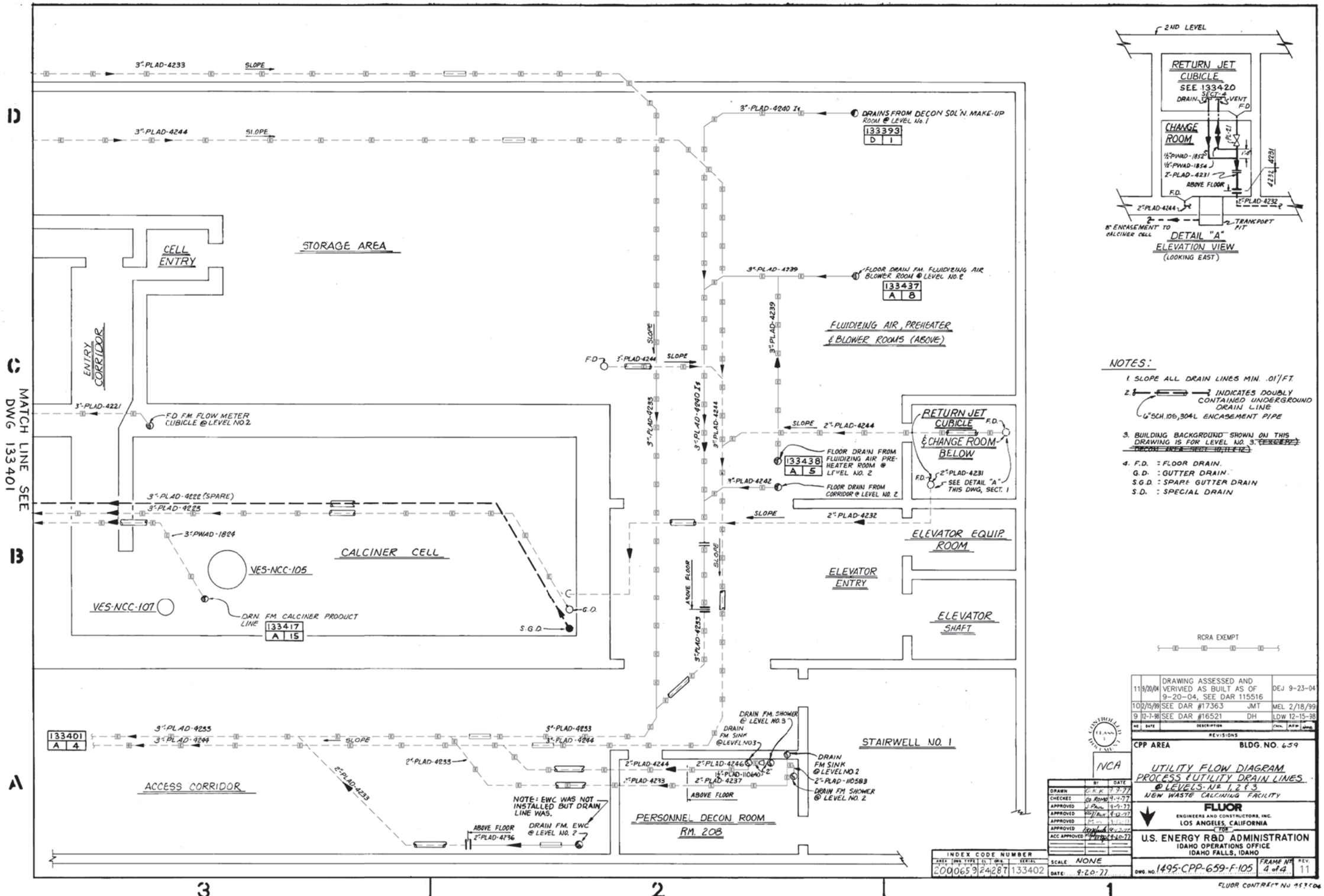

NOTES:

1. SLOPE ALL DRAIN LINES MIN. .01'/FT.
2. INDICATES DOUBLY CONTAINED UNDERGROUND DRAIN LINE
   6" SCH. 105, 304L ENCASEMENT PIPE
3. BUILDING BACKGROUND SHOWN ON THIS DRAWING IS FOR LEVEL NO. 3. ~~(EXCEPT DECON AREA SECT. 10, 11 & 12)~~
4. F.D. : FLOOR DRAIN.
   G.D. : GUTTER DRAIN.
   S.G.D. : SPARE GUTTER DRAIN
   S.D. : SPECIAL DRAIN

NO	DATE	DESCRIPTION	CHK.	APP	APPD
11	9/20/04	DRAWING ASSESSED AND VERIVIED AS BUILT AS OF 9-20-04, SEE DAR 115516			DEJ 9-23-04
10	2/15/99	SEE DAR #17363 JMT			MEL 2/18/99
9	12-7-98	SEE DAR #16521 DH			LDW 12-15-98

REVISIONS

CPP AREA BLDG. NO. 659

UTILITY FLOW DIAGRAM
PROCESS & UTILITY DRAIN LINES
@ LEVELS No 1, 2 & 3
NEW WASTE CALCINING FACILITY

FLUOR
ENGINEERS AND CONSTRUCTORS, INC.
LOS ANGELES, CALIFORNIA
FOR
U.S. ENERGY R&D ADMINISTRATION
IDAHO OPERATIONS OFFICE
IDAHO FALLS, IDAHO

	BY	DATE
DRAWN	G.K.K.	9-9-77
CHECKED	G. ROMO	9-9-77
APPROVED	J. PAUL	9-9-77
APPROVED	[illegible]	9-12-77
APPROVED	[illegible]	9-12-77
APPROVED	[illegible]	9-20-77
ACC APPROVED	[illegible]	9-20-77

NCA

INDEX CODE NUMBER

AREA	DWG. TYPE	CL.	ORIG.	SERIAL
200	0659	24	287	133402

SCALE NONE
DATE 9-20-77

DWG. NO. 1495-CPP-659-F-105 FRAME No 4 of 4 REV. 11

FLUOR CONTRACT NO 953504

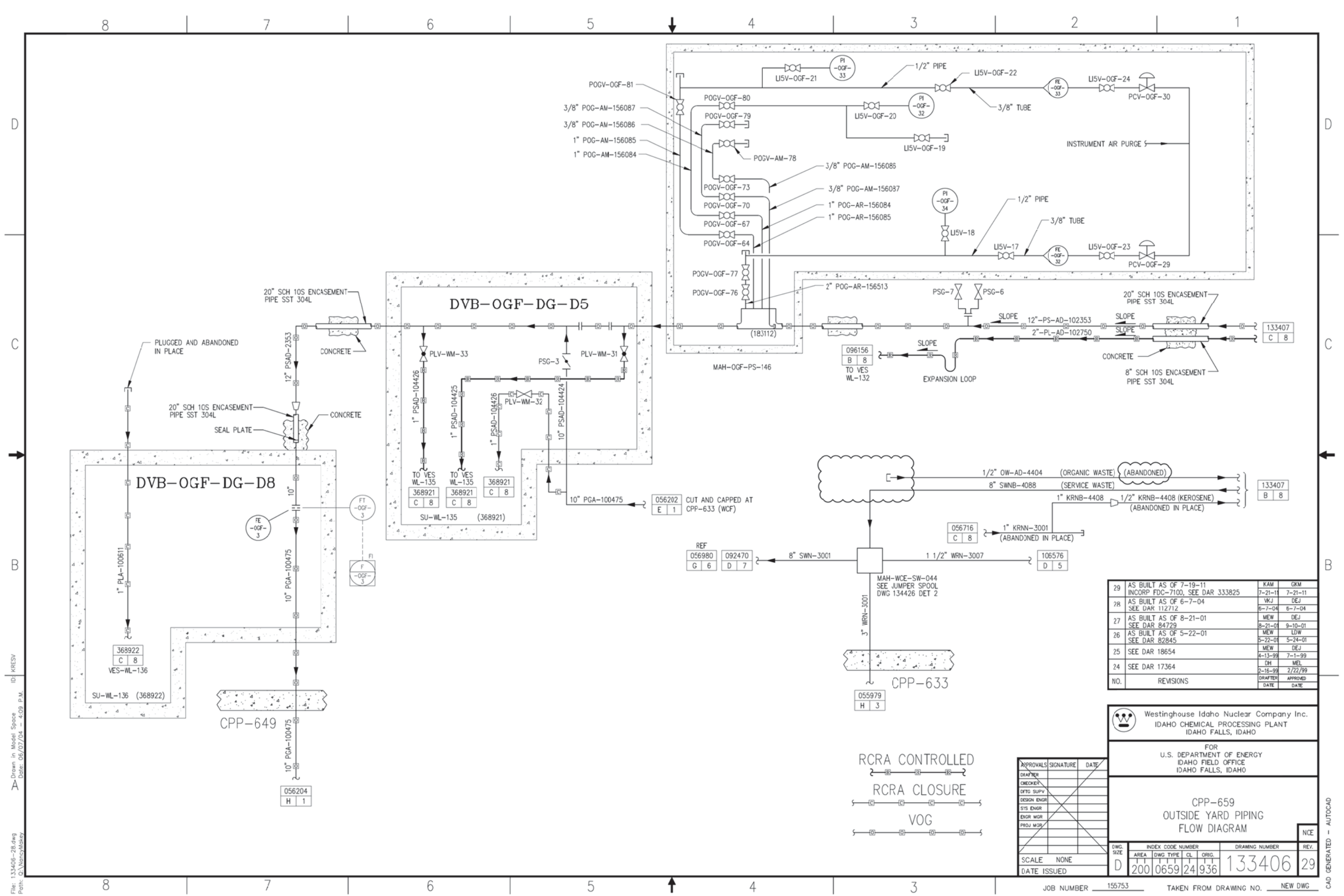

NO.	REVISIONS	DRAFTER DATE	APPROVED DATE
29	AS BUILT AS OF 7-19-11 INCORP FDC-7100, SEE DAR 333825	KAM 7-21-11	GKM 7-21-11
28	AS BUILT AS OF 6-7-04 SEE DAR 112712	VKJ 6-7-04	DEJ 6-7-04
27	AS BUILT AS OF 8-21-01 SEE DAR 84729	MEW 8-21-01	DEJ 9-10-01
26	AS BUILT AS OF 5-22-01 SEE DAR 82845	MEW 5-22-01	LDW 5-24-01
25	SEE DAR 18654	MEW 4-13-99	DEJ 7-1-99
24	SEE DAR 17364	DH 2-16-99	MEL 2/22/99

Westinghouse Idaho Nuclear Company Inc.
IDAHO CHEMICAL PROCESSING PLANT
IDAHO FALLS, IDAHO

FOR
U.S. DEPARTMENT OF ENERGY
IDAHO FIELD OFFICE
IDAHO FALLS, IDAHO

CPP-659
OUTSIDE YARD PIPING
FLOW DIAGRAM

APPROVALS	SIGNATURE	DATE
DRAFTER		
CHECKER		
DTG SUPV		
DESIGN ENGR		
SYS ENGR		
ENGR MGR		
PROJ MGR		

SCALE NONE
DATE ISSUED

DWG. SIZE	INDEX CODE NUMBER: AREA	DWG TYPE	CL	ORIG.	DRAWING NUMBER	REV.
D	200	0659	24	936	133406	29

NCE

JOB NUMBER 155753 TAKEN FROM DRAWING NO. NEW DWG

CAD GENERATED - AUTOCAD

ID: KRESV
Drawn in Model Space
Date: 06/07/04 - 4:09 P.M.
File: 133406-28.dwg
Path: Q:\Nancy\Makey

DVB-WM-PW-B11 057503 D 3

096794 A 3 TO CPP-699

FIRE HOSE HOUSE (HHS-NCE-938-2)

056593 E 6

(HYD-UTI-6511)

10" FWNR-109896

6" FWNF-104416

FWV-UTI-6511

FWV UTI 6516

FWV UTI 6508

FWV UTI 6519

10" 304L, SCH 10S ENCASEMENT PIPE

8" FWNF-104416

FEED LINE & ENCASEMENT PIPE ENCLOSED IN CONCRETE

10" X 6"

3" PSAB-101700 (DOUBLY CONTAINED LIQUID WASTE FEED & RETURN)

SLOPE

BUILDING WALL

BUILDING OUTSIDE WALL

FWV UTI 6507

8" FWNF-104420

096857 A 7

8" FWNF-104416

CONTROL ROOM (FIRE ALARM PANEL) FIRE ALARM

FWV UTI 6506

NEW WASTE CALCINING FACILITY BLDG. CPP-659

133410 C 12

057364 A 7

6" TWNC-104413

12" PSAD-102353

FWV UTI 6505

20" X 16"

6" FWNF-104416

FWV-UTI-6504

HYD-UTI-6504

133436 A 1

133406 D 1 TO VES WL-132

2" PL-AD-102750

2" PL-AD-102750

133408 C 6 FROM VES NCC-119, 122 & VES NCD-123, 129

SEE DWG 132338 TYP

8" X 6"

16" 304L SCH 10S ENCASEMENT PIPE

6" 304L SCH 10S ENCASEMENT PIPE

FWV UTI 6502

FWV UTI 6501

10" FWN-101604

056570 E 6

4" WQN-106109

FE 001-1

FWV UTI 6503

UTILITY CORRIDOR

6" HSNB-104406-Ih

133382 B 10

133387 B 9

133401 A 6

6" RWNC-104411 (ABANDONED)

6" (FUTURE)

SW-202-6

SW-202-2

1"SW-NN-155928

SW-202-3

SW-202-4 SAMPLE VALVE

057364 A 7

133415 D 21

4" HANC-104410

EXPANDABLE PLUG

COND. (FUTURE)

DEMIN. WTR. (FUTURE)

S.S.

S.S.

6" AF

6" AF

FE 946-1

133385 A 3

SEE GEN NOTE 9

8"SWNB-104088

1 1/2" ONAE-104409

1 1/2" KRNB-104408 (ABANDONED)

1"SW-NN-155930

1"SW-NN-155928

SW-202-1

P-TB-202

OTA

OTA

HYDRANT BY CPP-659 SOUTH ENTRANCE

1"SW-NN-155929

SS-202-5

133389 B 1

133385 C 1

1" HANC-103854

2" HSNB-103661-Ih

3" PW-AR-157527

055329 F 5

1" HAN-111072

161425 G 3

1" HAN-101434

2" HSN-101435

2" HSN-106249

099162 G 4

161425 H 3

1 1/2" HSA-101436

3" TAA-101439

3" TAA-106120 (SPARE)

3" TAA-101438

TRANSPORT AIR RETURN

STEAM TRACER RETURN

SOLID PRODUCT

3" TAAB-101803(SCH 80S)

1 1/2" HSAF-101839

4" 3" TAAB-101802 (SCH 80S) TO F.W. SPRINKLING

096855 D 4

FWV UTI 6512

FWV UTI 6513

8" FWNF-104421

SEE GEN NOTE 8

SEE NOTE 5 TYP 10 PLACES

FWV UTI 6514

8" FWNF-104416

1" KR-NN-156001 (ABANDONED)

NOTE: THIS PIPING DUPLICATED ON DWG. 133421 C-3

HAV-WS6-42

HAV-WS6-44

HAV-WS6-43

3/8" TUBING

HAV-WS6-36

HAV-WS6-35

FI WS6 HA2

FI WS6 HA1

PT WS6 5

PR WS6 1

PT WS6 4

HAV-WCS-546

1/2" HAN-111124

HAV-WCS-545

1/2" HAN-111125

133421 D 2

133421 C 1

FI WCS HA5

FI WCS HA6

HAV-WCS-547

1/2" HAN-111126

HAV-WCS-548

1/2" HAN-111127

FI WCS 765-V-2

FI WCS 765-V-1

161425 H 8

1/2" HAN-111113

HAV-WS6-1

1" HAN-101434

2" HSN-101435

1" HAN-106233

HAV-WS6-33

1/2" HAN-111128

HAV-WS6-34

1/2" HAN-111129

FI WS6 HA3

FI WS6 HA4

161425 H 6

HAV-WS7-1

1/2" HANN-107550

HAV-WS7-2

1/2" HANN-107553

FI WS7 1

FI WS7 2

099162 H 6

157798 D 8

158491 D 3

161425 H 3

NOTES: OFFSITE INTERFACE FOR LIQUID STORAGE INSTRUMENTATION.

THE FOLLOWING ALARMS FROM ASSOCIATED ICPP FACILITIES WILL BE REQUIRED TO THE NWCF CONTROL PANEL:

1. A GENERAL ALARM SIGNAL INDICATING THE STATUS OF OPERATIONS IN BUILDING CPP-604 (I.E. OFF-GAS SYSTEMS, PEW EVAPORATOR, APS ETC.). TIE-IN WILL BE AT CPP-633 ON PANEL NO. 5, OF WCF MAIN CONTROL PANEL.
2. A GENERAL ALARM SIGNAL INDICATING THE STATUS OF "TANK FARM" OPERATIONS (I.E. HIGH OR LOW LIQUID STORAGE TANK LEVEL, VAULT SUMP ACTIVITY, ETC.). A TIE-IN POINT (JUNCTION BOX) SHALL BE PROVIDED BY OTHERS AT ICPP-0-633, ON PANEL NO. 5, OF WCF MAIN CONTROL PANEL.
3. A GENERAL ALARM SIGNAL INDICATING THE STATUS OF WASTE DIVERSION SYSTEM OPERATIONS TIE-IN WILL BE AT CPP-0-633, ON PANEL NO. 5, OF WCF MAIN CONTROL PANEL.

056593 E 6

056266 E 6

2" CWND-103623 POTABLE WATER

056317 E 6

501730 D 8

8" HSN-101623 150# STM

133406 B 1

(ABANDONED) 1/2" OW-AD-104404 ORGANIC WASTE

056382 G 6

4" HAN-101637 100# AIR

098405 A 8

(ABANDONED) 1 1/2" NAA-101632 NITRIC ACID

056979 D 6

(ABANDONED) 2" ONA-101666 OXYGEN

6" RWN-101600 RAW WATER (ABANDONED)

056864 G 6

6" TWN-109826 TREATED WATER

133406 B 1

3" 4" 8" 8" SWNB-104088 SERVICE WASTE

/2" KRNB-104408 (ABANDONED) KEROSENE

SEE PUP DWG 135537

055335 G 3

CONTROL ROOM (FIRE ALARM PANEL) FIRE ALARM

8" FMNF-104416

RCRA CONTROLLED

VOG

FWV-UTI-6515

6" FWNF-104416

HYD-UTI-6515

FIRE HYDRANT (TYP 3 PLACES)

FIRE HOSE HOUSE

385784 C 8

DCS OPERATORS CONSOLE CONTROL ROOM

YL 202-1

LSH 202-3

LSH 202-2

UY 901-1-16 19

UY 901-1-16 17

UY 901-1-16 18

UTILITY CORRIDOR

LSHH TB-202 3

LSH TB-202 2

LSL TB-202 1

HS TB-202 1 994 START PUMP

HS TB-202 2 994 STOP PUMP

YL TB-202 3 994 PUMP ENERGIZED

ME 156001

005 MIS KRS 1682

005

005 M-NCO 156001 MAH

REFERENCE DRAWINGS:

056381

NO.	REVISIONS	DRAFTER DATE	CHECKER DATE	DFTG SUPV DATE	SYS ENGR DATE	REV.
25	AS BUILT AS OF 10-28-2015 SEE DRF-347010	ALK 11-2-15	KJK 11-3-15			
24	AS BUILT AS OF 07-19-2011 INCORP FDC-7100, SEE DRF-333825	KAM 7-21-11	GKM 7-21-11			
23	INCORPORATED INFO FROM FDC 4677 AS BUILT AS OF 07-01-09 SEE DRF-326724	HS 7-1-09	EEE 7-13-09			
22	AS BUILT AS OF 6-7-04 SEE DAR 112712	VKJ 6-7-04	DEJ 6-7-04			
21	ASSESSED AND VERIFIED AS BUILT AS OF 12-16-03 SEE DAR 107817	EEE 1/15/04	DEJ 2/2/04			

REV. 9 9/10/90

Westinghouse Idaho Nuclear Company Inc.
IDAHO CHEMICAL PROCESSING PLANT
IDAHO FALLS, IDAHO

FOR
U.S. DEPARTMENT OF ENERGY
IDAHO FIELD OFFICE
IDAHO FALLS, IDAHO

APPROVALS	SIGNATURE	DATE
DRAFTER		
CHECKER		
DFTG SUPV		
DESIGN ENGR		
SYS ENGR		
ENGR MGR		
PROJ MGR		
SCALE		
DATE ISSUED		

CPP-659 OUTSIDE YARD PIPING FLOW DIAGRAM NEW WASTE CALCINING FACILITY

NCE

DWG. SIZE	INDEX CODE NUMBER AREA	DWG TYPE	CL	ORIG.	DRAWING NUMBER	REV.
D	200	0659	24	287	133407	25

JOB NUMBER _____ TAKEN FROM DRAWING NO. _____

CAD GENERATED - AUTOCAD

ID: KEYAL

Date: 11/02/15 - 11:26 AM Layout Name: Model
File: 133407-25.dwg Path: K:\FDC Markup Document Files\INTEC FDC Markup Document Files\WWF\DRF-347010

REVISIONS	
REV	DESCRIPTION
29	AS-BUILT AS OF 7/18/17. UPDATED TITLE BLOCK. REMOVED PRIOR REV. HISTORY INC. FDC-11064. SEE DRF-355333.

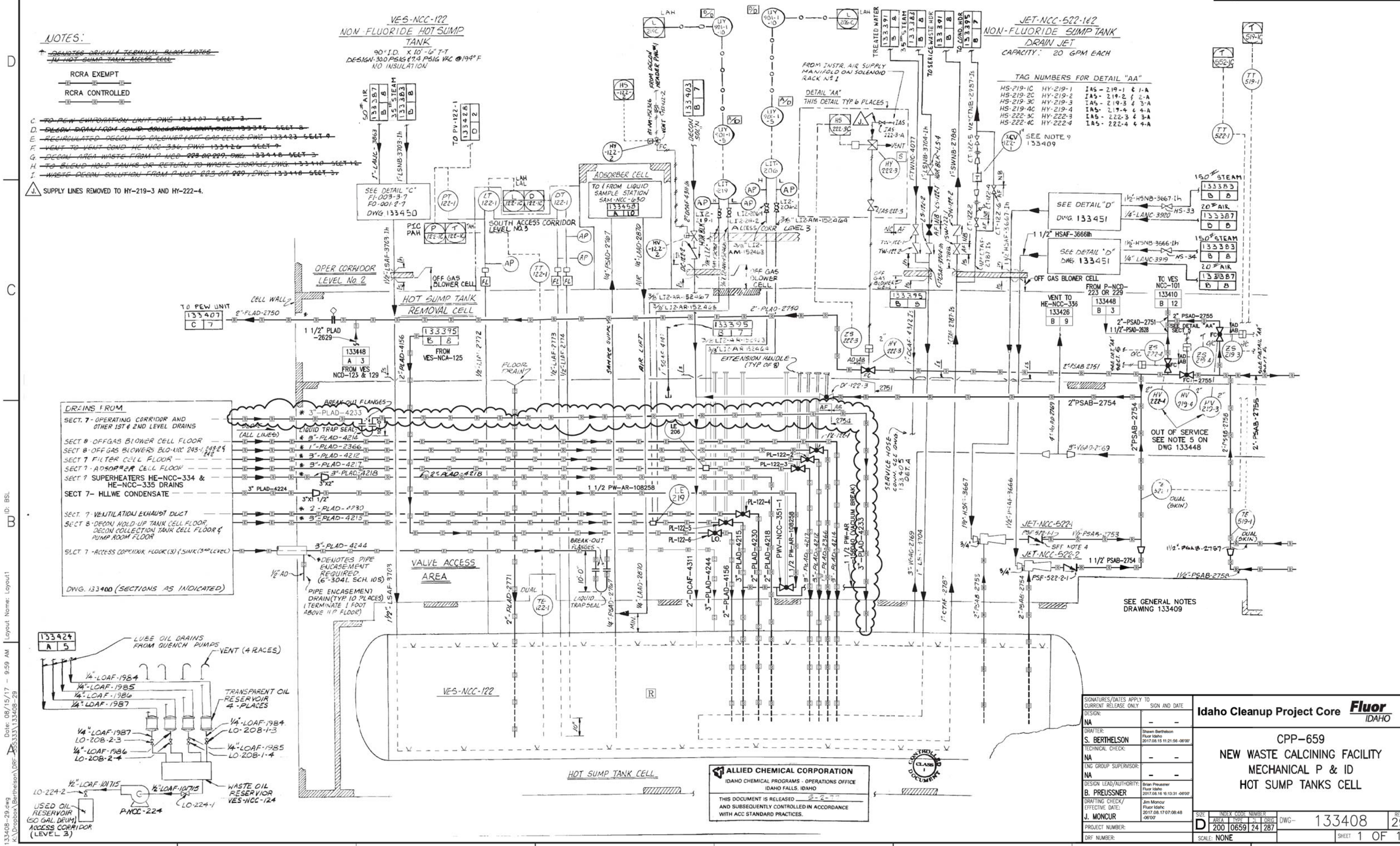

ALLIED CHEMICAL CORPORATION
IDAHO CHEMICAL PROGRAMS - OPERATIONS OFFICE
IDAHO FALLS, IDAHO
THIS DOCUMENT IS RELEASED 5-2-77
AND SUBSEQUENTLY CONTROLLED IN ACCORDANCE WITH ACC STANDARD PRACTICES.

SIGNATURES/DATES APPLY TO CURRENT RELEASE ONLY	SIGN AND DATE
DESIGN: NA	- -
DRAFTER: S. BERTHELSON	Shawn Berthelson Fluor Idaho 2017.08.15 11:21:56 -06'00'
TECHNICAL CHECK: NA	- -
ENG GROUP SUPERVISOR: NA	- -
DESIGN LEAD/AUTHORITY: B. PREUSSNER	Brian Preussner Fluor Idaho 2017.08.16 16:13:31 -06'00'
DRAFTING CHECK/ EFFECTIVE DATE: J. MONCUR	Jim Moncur Fluor Idaho 2017.08.17 07:08:48 -06'00'
PROJECT NUMBER:	
DRF NUMBER:	

Idaho Cleanup Project Core Fluor IDAHO

CPP-659
NEW WASTE CALCINING FACILITY
MECHANICAL P & ID
HOT SUMP TANKS CELL

SIZE	INDEX CODE NUMBER AREA	TYPE	CL	ORIG	DWG-	REV
D	200	0659	24	287	133408	29

SCALE: NONE
SHEET 1 OF 1

EQUIPMENT LOCATION INDEX

EQUIPMENT No.	SECTION No.
JET-NCC-519-1	3 - THIS DWG
JET-NCC-519-2	3 - THIS DWG
JET-NCC-522-1	4 - 133408
JET-NCC-522-2	4 - 133408
JET-NCC-551	3 - THIS DWG
P-NCC-219	3 - THIS DWG
VES-NCC-119	2 & 3 - THIS DWG
VES-NCC-122	4 & 5 - 133408

GENERAL NOTES

1. FOR CONT. OF DECON. SOL'N. LINES SEE DWGS 133403 & 5.
2. FOR CONT. OF UTILITY LINES SEE DWGS 133382 & 93.
3. REFER TO DWG. 133376 FOR FLOW DIAGRAM LEGEND, SYMBOLS AND ABBREVIATIONS.
4. OTHERS TO DRILL HOLE IN BOTTOM OF CHECK VALVE TO ALLOW A SMALL STREAM OF LIQUID TO PASS.
5. ~~DETAIL "AA" SECTION 5 133408~~
6. ALL VALVES AND JETS IN THE HOT SUMP TANKS CELL ARE TO BE SEPARATED FROM THE TANKS BY A SHIELDING WALL. (IN VALVE ACCESS ROOM).
7. THERE MUST BE AT LEAST 3' OF STRAIGHT PIPE DOWNSTREAM OF EACH JET AHEAD OF THE FIRST TURN.
8. ~~FUTURE EQUIPMENT, ASSOCIATED PIPING, AND INSTRUMENT BALLOONS ARE SHOWN DASHED.~~
9. TRAPS AND CONDENSATE LINES ARE IN ACCESS CORRIDOR, LEVEL NO. 3. (133395, SECT 7)

10 (triangle) VALVE PW-119-3 HAS A BROKEN VALVE STEM AND IS IN THE OPEN POSITION.

FLUSH CONN. VALVE NUMBERS

LINE No	UPSTREAM GATE	UPSTREAM CHECK	DOWNSTREAM GATE	DOWNSTREAM CHECK
PLAD-4220	PL-119-7	PL-119-8	PL-119-9	PL-119-10
PLAD-4221	PL-119-13	PL-119-14	PL-119-15	PL-119-16
PLAD-4223	PL-119-17	PL-119-18	PL-119-19	PL-119-20
PLAD-4225	PL-119-21	PL-119-22	PL-119-23	PL-119-24
PLAD-4226	PL-119-25	PL-119-26	PL-119-27	PL-119-28

ALLIED CHEMICAL CORPORATION
IDAHO CHEMICAL PROGRAMS - OPERATIONS OFFICE
IDAHO FALLS, IDAHO

THIS DOCUMENT IS RELEASED 5-2-77
AND SUBSEQUENTLY CONTROLLED IN ACCORDANCE WITH ACC STANDARD PRACTICES.

NO.	REVISIONS	DRAFTER DATE	CHECKER DATE	SYS ENGR DATE
31	REMOVED DRAWING AFFECTED BY STATEMENT AS BUILT AS OF 12/02/10 SEE DRF-331851	KB 12/2/10	JM 12/7/10	
30	ADDED DRAWING AFFECTED BY STATEMENT AS BUILT AS OF 11/23/05 SEE DAR-126405	EEE 12/8/05	DEJ 12/8/05	

CPP AREA — BLDG. NO 659
MECHANICAL FLOW DIAGRAM
HOT SUMP TANKS CELL
NCC
NEW WASTE CALCINING FACILITY

DRAWN	A. Youngman	4-5-77
CHECKED	G. Romo	4-6-77
APPROVED	J. Paul	4-11-77
APPROVED	[illegible]	4-21-77
APPROVED	[illegible]	4-22-77
APPROVED	[illegible]	[illegible]
ACC APPROVED	[illegible]	5-2-77

FLUOR
ENGINEERS AND CONSTRUCTORS INC.
LOS ANGELES, CALIFORNIA
FOR
U.S. ENERGY R&D ADMINISTRATION
IDAHO OPERATIONS OFFICE
IDAHO FALLS, IDAHO

INDEX CODE NUMBER				
AREA	TYPE	CL.	ORIG.	SERIAL
200	0659	24	287	133409

SCALE NONE
DATE 5-2-77
DWG. NO. 1495-CPP-659-F-110
FRAME No 2 of 2
REV 31

CAD OVERLAY DRAWING

File: 133409-31.dwg Date: 12/08/10 - 8:12 AM Layout Name: Model ID: KBR
Path: K:\INTEC Misc Drafting\Controlled DWGS\DRF-331851

NOTES:

1. PSF-2 CHECK VALVE REMOVED AND BLIND FLANGE INSTALLED.
2. THIS PORTION OF LINE 2" PSAB-2751 OUT OF SERVICE FOR RCRA COMPLIANCE (PROJECT 26655).

JET-NCC-501-1
BLEND TANK DRAIN JET
CAPACITY: 25 GPM

VES-NCC-101
BLEND TANK
114" I.D. X 9'-0" T-T
DESIGN: 30 PSIG @ 74 PSI VAC @ 300°F
NO INSULATION

JET-NCC-501-2
BLEND TANK DECON SOL'N
RECIRCULATION JET
CAPACITY: 40 GPM

FROM T-101-2 DWG. 133412 SECTION 4

OPER. CORRIDOR (LEVEL No. 2)

ACCESS CORRIDOR LEVEL No. 3

WASTE FEED FM TANK FARM (OR WASTE RETURN)

BUILDING OUTSIDE WALL

W/PIPE ENCASEMENT & SHIRLING

OUTSIDE UNDER-GROUND | STORAGE AREA | 3RD LEVEL ENTRY

TO IWTU

3" PW-AR-157527

6" CONTAINMENT

2"-PW-AR-157526

2"-PW-AR-157527

MANIPULATOR OPERATED

ENCASEMENT DRAIN

PURGE AIR

SEE DETAIL AA 133411 D8

FROM P-NCC-203 133412 P-4

FROM P-NCC-202 133411 A-7

2"-PSAB-1705

2"-PSAB-1704

BLEND & HOLD CELL

OFF GAS CELL

AIR LIFT PIT

2" PSAB-2751

FROM VES NCC-119 &122 OR NCD-123 133408 C-4

BURIED IN ENCASEMENT

2" PSAD-2751

PENETRATION 50

1 1/2" PSAB-1917 DO NOT PCKET

FROM VES NCC-108 133423 C-8

HOT SUMP TANKS REMOVAL CELL

1/2" ENCASEMENT DRAIN (TERMINATE 1 FOOT ABOVE FLOOR)

ADSORBER CELL

VESSEL VENTS TO VENT COND. HE-NCC-336 DWG. 133428 SECTION 2

TO & FROM LIQUID SAMPLE STATION SAM-NCC-600 (SEE OFF GASS CELL) DWG. 133425 SECTION 2

1/4"-PSAD-1744	SAMPLE SUPPLY	
1/4"-LAAD-2900	LIFT AIR	
1/4"-LAAD-2901	LIFT AIR	
1/4"-PSAD-1745	SAMPLE SUPPLY	
1/4"-LAAD-2902	LIFT AIR	
1/4"-PSAD-1746	SAMPLE SUPPLY	

SOLENOID RACK #3

100# AIR

FROM DECON HEADER PANEL #2

VENT

SEE DETAIL "D" DWG. 133451

SEE DETAIL "AA" 133411 D 8

SEE DETAIL "C" FI-003-3-1 FO-001-2-1 DWG. 133450

SEE DETAIL "D" DWG. 133451

51"DCAF-4360

JET-NCC-501-1

JET-NCC-501-2

VES-NCC-101

4-0" MINIMUM

10"

AIR PURGE 1/2" PSAB-3877

2" PSAB-1733

3" PSAB-1734

3" PSAB-1703

3" PSAB-1700

3" PSAB-1701

4" VGAD-1736

4" VGAD-1739

SLOPE

MINIMUM

DUAL (SKIN)

SAMPLE SUPPLY LIFT AIR

4HV-101-5

VALVE CUBICLE

VALVE, DOWNSTREAM PIPING AND INSTRUMENT LINE IN VALVE CUBICLE

TRANSFER 3" PSAB-1703 FROM VES-NCC-101 VIA AL-NCC-551-1

FILL 3" PSAB-1700 TO VES-NCC-102

FILL 3" PSAB-1701 TO VES-NCC-103

VENT 4" VGAD-1736

VENT 4" VGAD-1739

3" PSAB-1703 TO VES-NCC-101 OR 103 VIA AL-NCC-551-1

2"PWAD-1725 FROM VES-NCC-102

1/4" LAAD-2901 TO VES-NCC-119

1/4" PSAD-1745

3"PSAB-1734 FROM VES-NCC-103

1/4" LAAD-2902

1/4" PSAD-1746

134251 B-7 SHT 3 OVERFLOW FROM VES-NCC-152

2" PS-AB-108252

2 PS-AB-108250 134251 B-7 SHT 3 TO VES NCC-152

2 PW-AB-108259 134251 B-7 SHT 3 FROM VES NCC-150

2 PW-AB-108257 134251 B-7 SHT 3 FROM JET NCC-507

SEE GENERAL NOTES SECTION 1 133413

MATCH LINE FOR CONTINUATION SEE (DWG. 133411, SECT 9)

MATCH LINE FOR CONTINUATION SEE DWG 133411

SEE NOTE 18 DWG 133413

THIS DRAWING AFFECTED BY
W.O./ECF NO.
SNR NO.
RIPOUT DWG NO. 750739, 750742
INSTALL DWG NO750739, 750742

ALLIED CHEMICAL CORPORATION
IDAHO CHEMICAL PROGRAMS - OPERATIONS OFFICE
IDAHO FALLS, IDAHO
THIS DOCUMENT IS RELEASED 5-
AND SUBSEQUENTLY CONTROLLED IN ACCORDANCE WITH ACC STANDARD PRACTICES.

RCRA CONTROLLED
RCRA EXEMPT
VOG

CONTINUITY CLASS I DOCUMENT

NO	DATE	DESCRIPTION	APPROVED
35		AS BUILT AS OF 8-29-2012, INCORP'D FDC-8527, SEE DRF-337265	CKM 9-12-12
34		AS BUILT AS OF 12-6-2011, SEE DRF-335110, PRIOR HISTORY REMOVED	CKM 12-07-11

REVISIONS

CPP AREA BLDG. NO. 659

NEW WASTE CALCINING FACILITY
MECHANICAL P & I D
BLEND & HOLD CELL AND VALVE CUBICLE
SHEET 1 OF 4

FLUOR
ENGINEERS AND CONSTRUCTORS, INC.
LOS ANGELES, CALIFORNIA

J.S ENERGY R&D ADMINISTRATION
IDAHO OPERATIONS OFFICE
IDAHO FALLS, IDAHO

	BY	DATE
DRAWN		4-9-77
CHECKED	G. ROMO	4-5-77
APPROVED		
APPROVED		4-11-12
APPROVED		
APPROVED		
ACC APPROVED		5-3-77

SCALE: NONE
DATE: 5-2-77

INDEX CODE NUMBER
AREA 200 | DWG TYPE 0659 | SYS 24 | SEQ 28 | SERIAL 133410

DWG NO. M95-CPP-659-F-111 FRAME NO 1 OF 4 REV 35

DWG 133411

File: 133410-35.dwg
Path: V:_Vault\Designs\IWTU\IWTU Essential and Master\Essential\DRF-337265
Date: 09/12/12 - 9:04 AM Layout Name: Model
ID: STAKKT

12 11 10

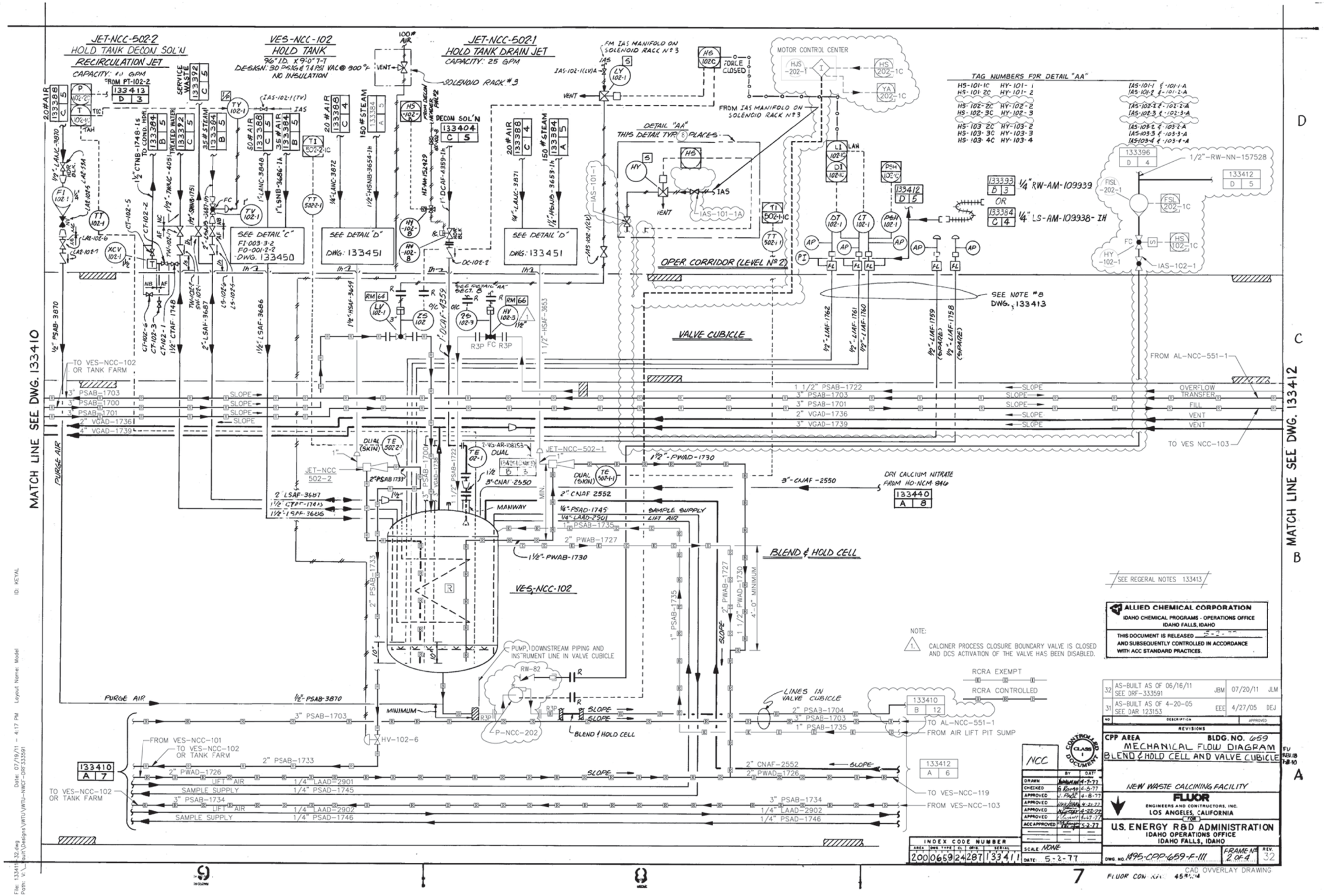

JET-NCC-502-2
HOLD TANK DECON SOL'N
RECIRCULATION JET
VES-NCC-102
HOLD TANK
96" I.D. X 9'-0" T-T
DESIGN: 30 PSIG & 74 PSI VAC @ 300°F
NO INSULATION
JET-NCC-502-1
HOLD TANK DRAIN JET
CAPACITY: 25 GPM
MOTOR CONTROL CENTER
TAG NUMBERS FOR DETAIL "AA"
DETAIL "AA"
THIS DETAIL TYP. 8 PLACES
OPER. CORRIDOR (LEVEL No 2)
VALVE CUBICLE
BLEND & HOLD CELL
VES-NCC-102
MATCH LINE SEE DWG. 133410
MATCH LINE SEE DWG. 133412
SEE NOTE #8 DWG. 133413
SEE DETAIL "C" FI-003-3-2 FO-001-2-2 DWG. 133450
SEE DETAIL "D" DWG. 133451
SEE DETAIL "D" DWG. 133451
SEE DETAIL "AA" SECT. 8
DRY CALCIUM NITRATE FROM HO-NCM-846
PUMP, DOWNSTREAM PIPING AND INSTRUMENT LINE IN VALVE CUBICLE
LINES IN VALVE CUBICLE
RCRA EXEMPT
RCRA CONTROLLED
TO AL-NCC-551-1
FROM AIR LIFT PIT SUMP
TO VES-NCC-119
FROM VES-NCC-103
FROM AL-NCC-551-1
TO VES NCC-103
TO VES-NCC-102 OR TANK FARM
FROM VES-NCC-101
TO VES-NCC-102 OR TANK FARM
PURGE AIR
MANWAY
SAMPLE SUPPLY
LIFT AIR
MINIMUM
4'-0" MINIMUM
SLOPE
OVERFLOW
TRANSFER
FILL
VENT
SEE REGERAL NOTES 133413
NOTE:
1. CALCINER PROCESS CLOSURE BOUNDARY VALVE IS CLOSED AND DCS ACTIVATION OF THE VALVE HAS BEEN DISABLED.
ALLIED CHEMICAL CORPORATION
IDAHO CHEMICAL PROGRAMS - OPERATIONS OFFICE
IDAHO FALLS, IDAHO
THIS DOCUMENT IS RELEASED 5-2-77
AND SUBSEQUENTLY CONTROLLED IN ACCORDANCE WITH ACC STANDARD PRACTICES.
32 AS-BUILT AS OF 06/16/11 SEE DRF-333591 JBM 07/20/11 JLM
31 AS-BUILT AS OF 4-20-05 SEE DAR 123153 EEE 4/27/05 DEJ
REVISIONS
CPP AREA BLDG. NO. 659
MECHANICAL FLOW DIAGRAM
BLEND & HOLD CELL AND VALVE CUBICLE
NEW WASTE CALCINING FACILITY
FLUOR
ENGINEERS AND CONSTRUCTORS, INC.
LOS ANGELES, CALIFORNIA
FOR
U.S. ENERGY R&D ADMINISTRATION
IDAHO OPERATIONS OFFICE
IDAHO FALLS, IDAHO
INDEX CODE NUMBER
200 0659 24 287 133411
SCALE NONE
DATE: 5-2-77
DWG. NO. 1495-CPP-659-F-111
FRAME No 2 OF 4
REV. 32
CAD OVVERLAY DRAWING

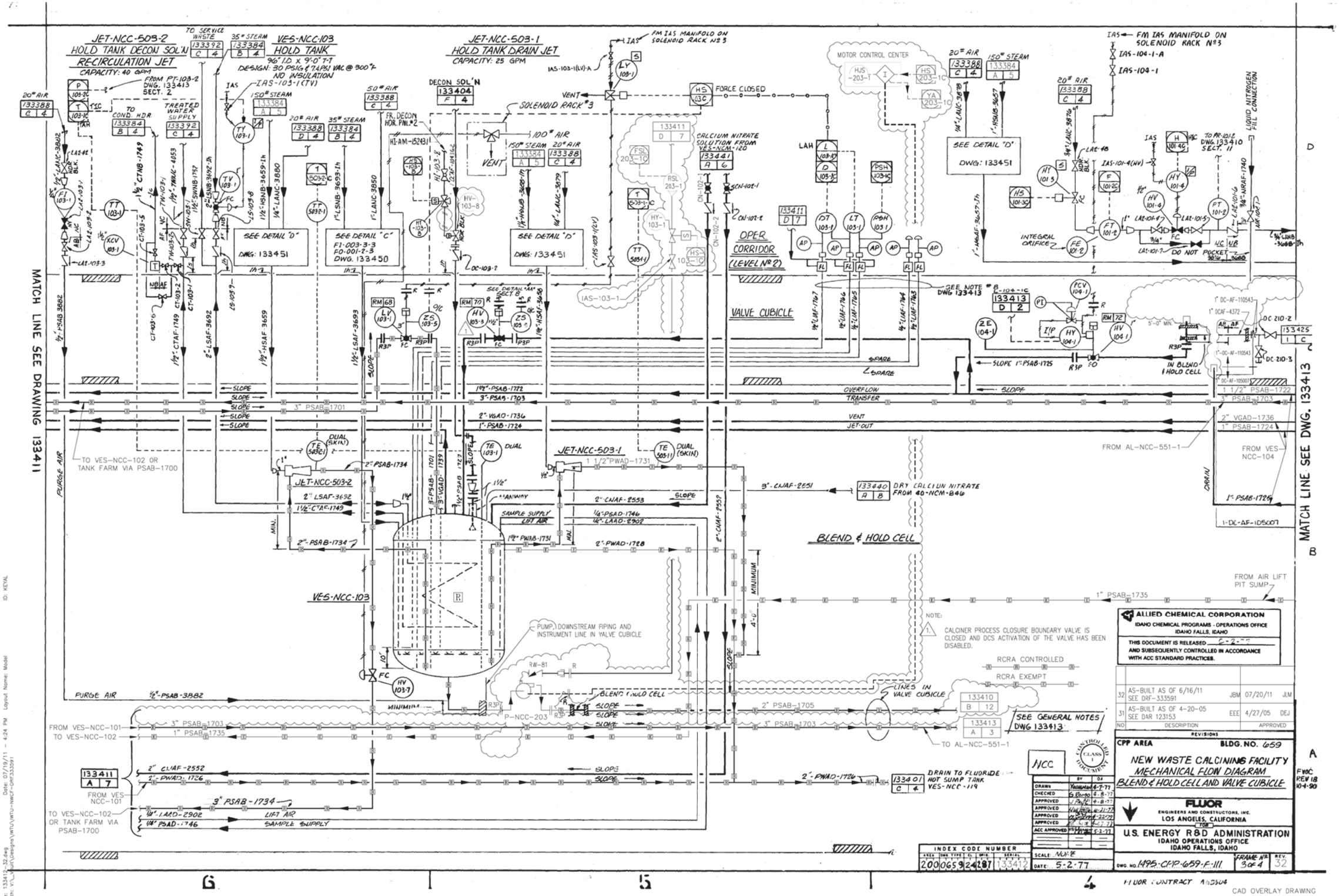

JET-NCC-503-2
HOLD TANK DECON SOL'N
RECIRCULATION JET
CAPACITY: 40 GPM
VES-NCC-103
HOLD TANK
96" I.D. x 9'-0" T-T
DESIGN: 30 PSIG & 7.4 PSI VAC @ 300°F
NO INSULATION
JET-NCC-503-1
HOLD TANK DRAIN JET
CAPACITY: 25 GPM
DECON SOL'N
SOLENOID RACK #3
FORCE CLOSED
MOTOR CONTROL CENTER
CALCIUM NITRATE SOLUTION FROM VES-NCM-120
OPER CORRIDOR (LEVEL No 2)
VALVE CUBICLE
SEE DETAIL "D" DWG: 133451
SEE DETAIL "C" F1-003-3-3 F0-001-2-3 DWG. 133450
SEE DETAIL "AA" SECT. B
SEE NOTE #8 DWG 133413
FM IAS MANIFOLD ON SOLENOID RACK No 3
LIQUID NITROGEN FILL CONNECTION
INTEGRAL ORIFICE
DO NOT POCKET
MATCH LINE SEE DRAWING 133411
MATCH LINE SEE DWG. 133413
TO VES-NCC-102 OR TANK FARM VIA PSAB-1700
JET-NCC-503-2
JET-NCC-503-1
VES-NCC-103
BLEND & HOLD CELL
OVERFLOW
TRANSFER
VENT
JET-OUT
SAMPLE SUPPLY
LIFT AIR
PURGE AIR
DRY CALCIUM NITRATE FROM 40-NCM-846
FROM AL-NCC-551-1
FROM VES-NCC-104
FROM AIR LIFT PIT SUMP
PUMP, DOWNSTREAM PIPING AND INSTRUMENT LINE IN VALVE CUBICLE
RCRA CONTROLLED
RCRA EXEMPT
LINES IN VALVE CUBICLE
SEE GENERAL NOTES DWG 133413
TO AL-NCC-551-1
FROM VES-NCC-101
TO VES-NCC-102
TO VES-NCC-102 OR TANK FARM VIA PSAB-1700
DRAIN TO FLUORIDE HOT SUMP TANK VES-NCC-119
NOTE:
1. CALCINER PROCESS CLOSURE BOUNDARY VALVE IS CLOSED AND DCS ACTIVATION OF THE VALVE HAS BEEN DISABLED.
ALLIED CHEMICAL CORPORATION
IDAHO CHEMICAL PROGRAMS - OPERATIONS OFFICE
IDAHO FALLS, IDAHO
THIS DOCUMENT IS RELEASED 5-2-77 AND SUBSEQUENTLY CONTROLLED IN ACCORDANCE WITH ACC STANDARD PRACTICES.
32 AS-BUILT AS OF 6/16/11 SEE DRF-333591 JBM 07/20/11 JLM
31 AS-BUILT AS OF 4-20-05 SEE DAR 123153 EEE 4/27/05 DEJ
NO DESCRIPTION APPROVED
REVISIONS
CPP AREA BLDG. NO. 659
NEW WASTE CALCINING FACILITY
MECHANICAL FLOW DIAGRAM
BLEND & HOLD CELL AND VALVE CUBICLE
FLUOR
ENGINEERS AND CONSTRUCTORS, INC.
LOS ANGELES, CALIFORNIA
U.S. ENERGY R&D ADMINISTRATION
IDAHO OPERATIONS OFFICE
IDAHO FALLS, IDAHO
DWG. NO. 1495-CPP-659-F-111
FRAME No 3 of 4
REV. 32
INDEX CODE NUMBER
200 0659 24 287 133412
SCALE: NONE
DATE: 5-2-77
FLUOR CONTRACT A65504
CAD OVERLAY DRAWING

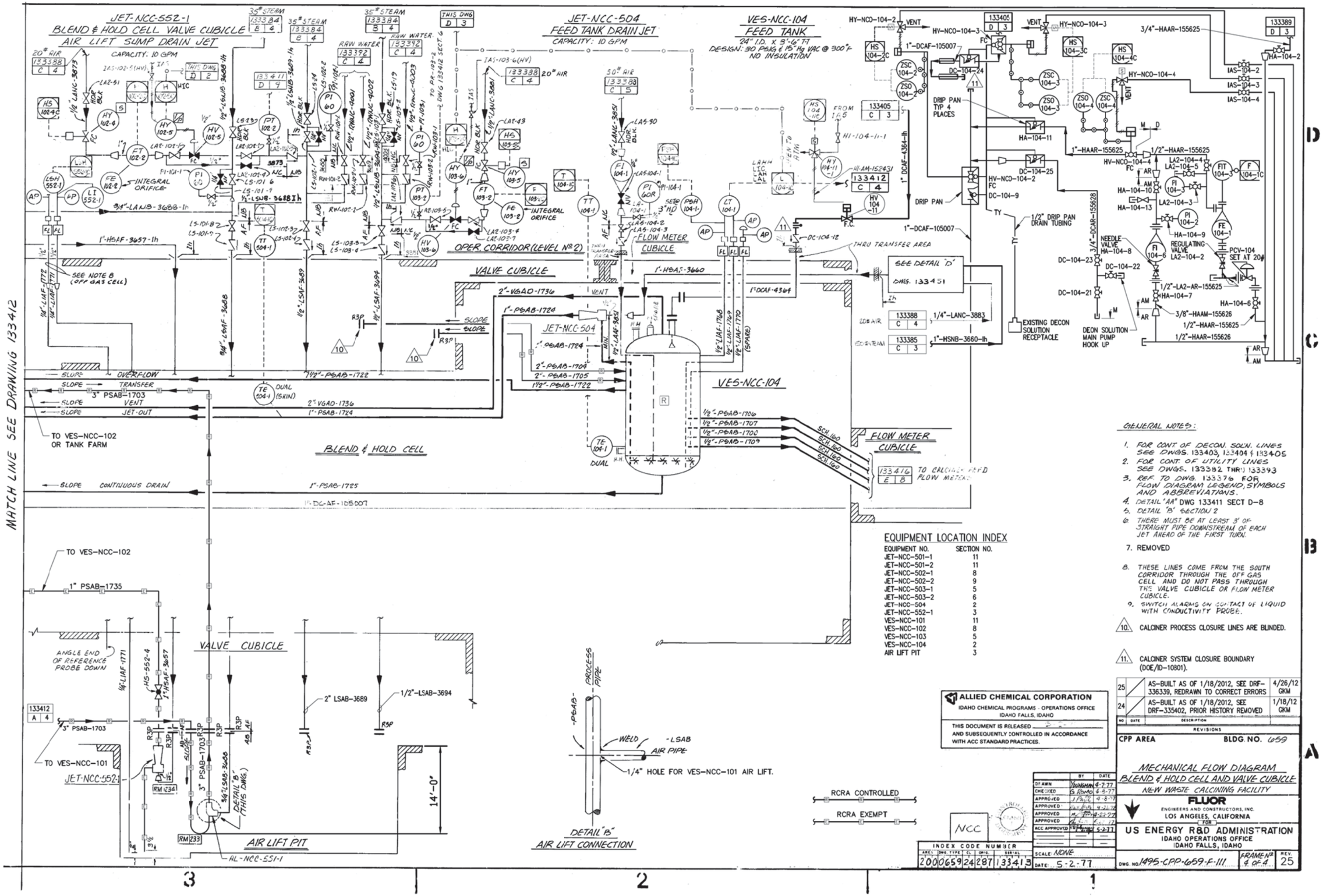

EQUIPMENT LOCATION INDEX

EQUIPMENT NO.	SECTION NO.
JET-NCC-501-1	11
JET-NCC-501-2	11
JET-NCC-502-1	8
JET-NCC-502-2	9
JET-NCC-503-1	5
JET-NCC-503-2	6
JET-NCC-504	2
JET-NCC-552-1	3
VES-NCC-101	11
VES-NCC-102	8
VES-NCC-103	5
VES-NCC-104	2
AIR LIFT PIT	3

GENERAL NOTES:

1. FOR CONT. OF DECON. SOLN. LINES SEE DWGS. 133403, 133404 & 133405
2. FOR CONT. OF UTILITY LINES SEE DWGS. 133382 THRU 133393
3. REF. TO DWG. 133376 FOR FLOW DIAGRAM LEGEND, SYMBOLS AND ABBREVIATIONS.
4. DETAIL "AA" DWG 133411 SECT D-8
5. DETAIL "B" SECTION 2
6. THERE MUST BE AT LEAST 3' OF STRAIGHT PIPE DOWNSTREAM OF EACH JET AHEAD OF THE FIRST TURN.
7. REMOVED
8. THESE LINES COME FROM THE SOUTH CORRIDOR THROUGH THE OFF GAS CELL AND DO NOT PASS THROUGH THE VALVE CUBICLE OR FLOW METER CUBICLE.
9. SWITCH ALARMS ON CONTACT OF LIQUID WITH CONDUCTIVITY PROBE.
10. CALCINER PROCESS CLOSURE LINES ARE BLINDED.
11. CALCINER SYSTEM CLOSURE BOUNDARY (DOE/ID-10801).

NO	DATE	DESCRIPTION	
25		AS-BUILT AS OF 1/18/2012, SEE DRF-336339, REDRAWN TO CORRECT ERRORS	4/26/12 GKM
24		AS-BUILT AS OF 1/18/2012, SEE DRF-335402, PRIOR HISTORY REMOVED	1/18/12 GKM

REVISIONS

ALLIED CHEMICAL CORPORATION
IDAHO CHEMICAL PROGRAMS - OPERATIONS OFFICE
IDAHO FALLS, IDAHO

THIS DOCUMENT IS RELEASED _____ AND SUBSEQUENTLY CONTROLLED IN ACCORDANCE WITH ACC STANDARD PRACTICES.

CPP AREA BLDG. NO. 659

MECHANICAL FLOW DIAGRAM
BLEND & HOLD CELL AND VALVE CUBICLE
NEW WASTE CALCINING FACILITY

FLUOR
ENGINEERS AND CONSTRUCTORS, INC.
LOS ANGELES, CALIFORNIA
FOR
US ENERGY R&D ADMINISTRATION
IDAHO OPERATIONS OFFICE
IDAHO FALLS, IDAHO

	BY	DATE
DRAWN	YOUNGMAN	4-7-77
CHECKED	G. ROMO	4-8-77
APPROVED	J. PAUL	4-8-77
APPROVED	[illegible]	4-21-77
APPROVED	[illegible]	4-22-77
APPROVED	[illegible]	[illegible]
ACC APPROVED	[illegible]	5-2-77

SCALE: NONE
DATE: 5-2-77

INDEX CODE NUMBER

AREA	DWG. TYPE	CL	ORIG.	SERIAL
200	0659	24	287	133413

DWG. NO. 1495-CPP-659-F-111 FRAME No 4 OF 4 REV. 25

File: 133413-25.dwg Date: 04/26/12 - 3:07 PM Layout Name: Model ID: MUNNKA
Path: V:\Designs\INTEC\MISC\INTEC Misc Drafting\Controlled DWGS\DRF-336339 DWG-133413

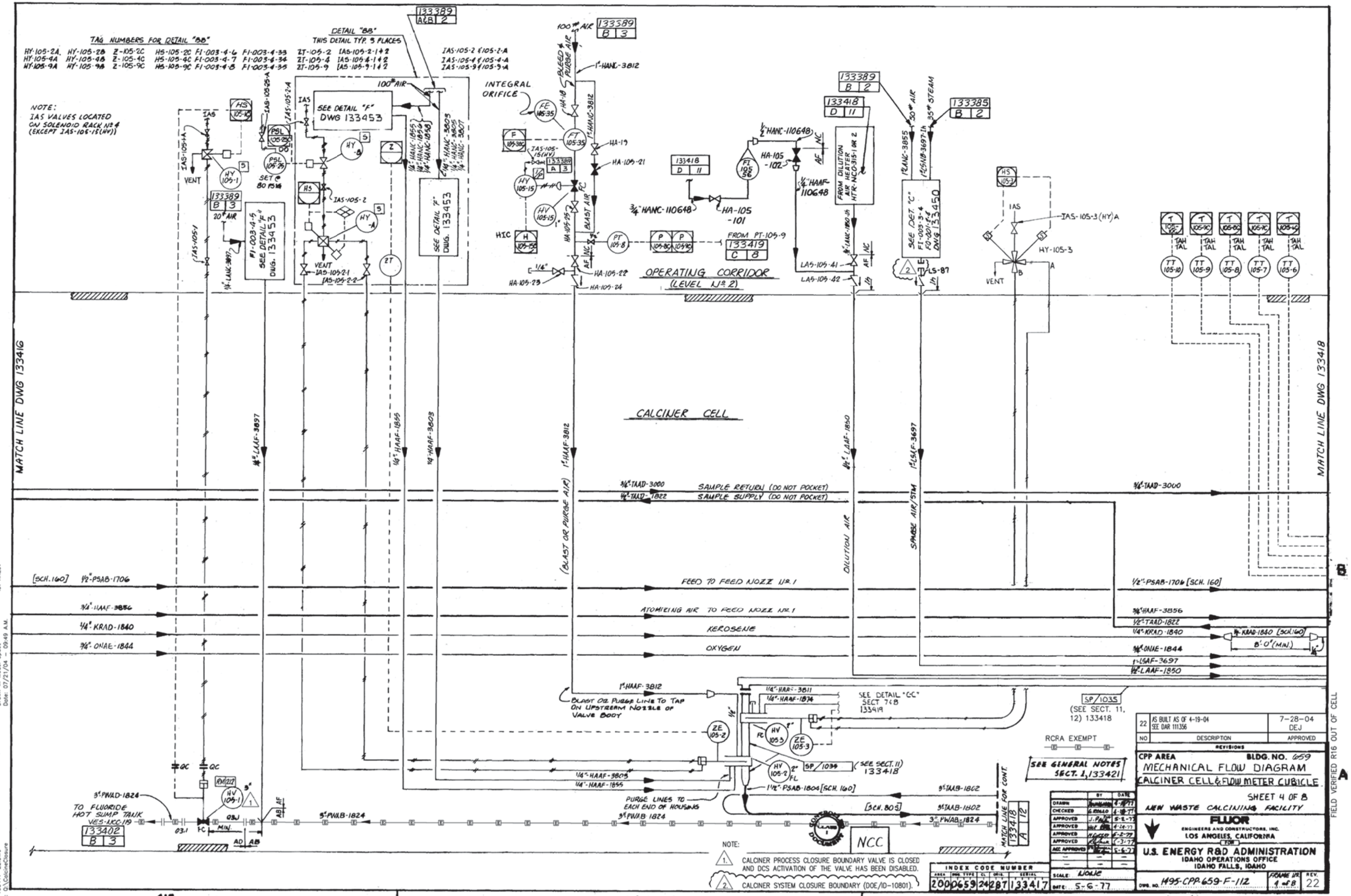

TAG NUMBERS FOR DETAIL "BB"
HY-105-2A HY-105-2B Z-105-2C HS-105-2C FI-003-4-6 FI-003-4-33 ZT-105-2 IAS-105-2-1 & 2 IAS-105-2 & 105-2-A
HY-105-4A HY-105-4B Z-105-4C HS-105-4C FI-003-4-7 FI-003-4-34 ZT-105-4 IAS-105-4-1 & 2 IAS-105-4 & 105-4-A
HY-105-9A HY-105-9B Z-105-9C HS-105-9C FI-003-4-8 FI-003-4-35 ZT-105-9 IAS-105-9-1 & 2 IAS-105-9 & 105-9-A
DETAIL "BB" THIS DETAIL TYP. 3 PLACES
NOTE: IAS VALVES LOCATED ON SOLENOID RACK No 4 (EXCEPT IAS-105-15(HY))
SEE DETAIL "F" DWG 133453
SEE DETAIL "F" DWG. 133453
FI-003-4-5 SEE DETAIL "F" DWG. 133453
INTEGRAL ORIFICE
OPERATING CORRIDOR (LEVEL No 2)
FROM PT-105-9
FROM DILUTION AIR HEATER HTR-NCO-315-1 OR 2
SEE DET. "C" FI-003-3-4 FO-001-2-4 DWG 133450
CALCINER CELL
MATCH LINE DWG 133416
MATCH LINE DWG 133418
SAMPLE RETURN (DO NOT POCKET)
SAMPLE SUPPLY (DO NOT POCKET)
FEED TO FEED NOZZ No 1
ATOMIZING AIR TO FEED NOZZ No 1
KEROSENE
OXYGEN
BLAST OR PURGE LINE TO TAP ON UPSTREAM NOZZLE OF VALVE BODY
SEE DETAIL "CC" SECT 7&8 133419
SP/1035 (SEE SECT. 11, 12) 133418
RCRA EXEMPT
SEE GENERAL NOTES SECT. 1, 133421
PURGE LINES TO EACH END OF HOUSING
TO FLUORIDE HOT SUMP TANK VES-NCC-119
MATCH LINE FOR CONT.
NCC
NOTE:
1. CALCINER PROCESS CLOSURE BOUNDARY VALVE IS CLOSED AND DCS ACTIVATION OF THE VALVE HAS BEEN DISABLED.
2. CALCINER SYSTEM CLOSURE BOUNDARY (DOE/ID-10801).
22 AS BUILT AS OF 4-19-04 SEE DAR 111356 7-28-04 DEJ
NO DESCRIPTION APPROVED
REVISIONS
CPP AREA BLDG. NO. 659
MECHANICAL FLOW DIAGRAM
CALCINER CELL & FLOW METER CUBICLE
SHEET 4 OF 8
NEW WASTE CALCINING FACILITY
FLUOR ENGINEERS AND CONSTRUCTORS, INC. LOS ANGELES, CALIFORNIA
U.S. ENERGY R&D ADMINISTRATION IDAHO OPERATIONS OFFICE IDAHO FALLS, IDAHO
INDEX CODE NUMBER 200 0659 24 287 133417
SCALE: NONE
DATE: 5-6-77
DWG. NO. 1495-CPP-659-F-112
FRAME No 4 of 8
REV. 22
FIELD VERIFIED R16 OUT OF CELL

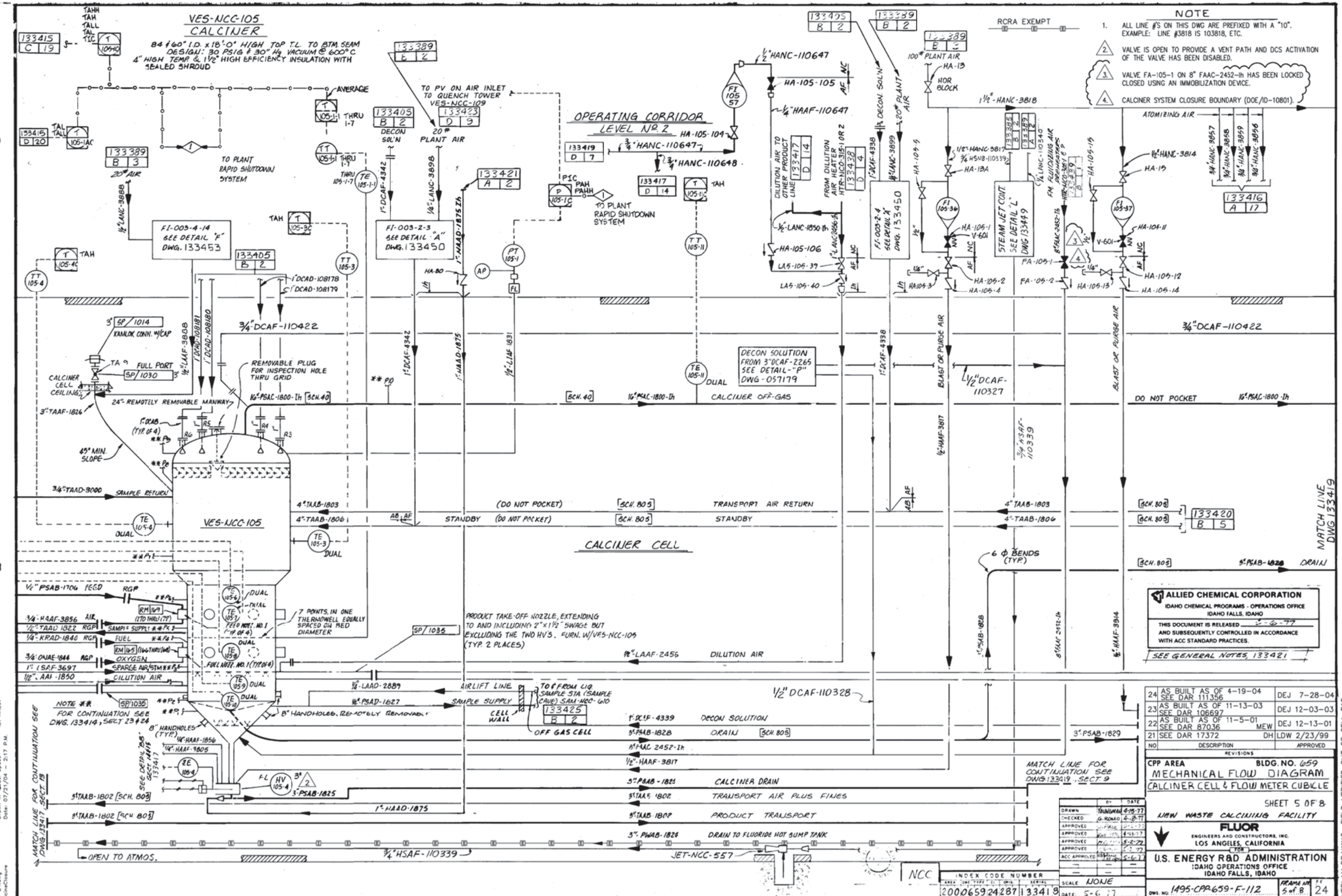
VES-NCC-105
CALCINER
84 ϕ 60" I.D. x 18'-0" HIGH TOP T.L. TO BTM. SEAM
DESIGN: 30 PSIG ϕ 30" Hg VACUUM @ 600°C
4" HIGH TEMP. & 1½" HIGH EFFICIENCY INSULATION WITH SEALED SHROUD
OPERATING CORRIDOR
LEVEL No. 2
TO PLANT RAPID SHUTDOWN SYSTEM
TO PV ON AIR INLET TO QUENCH TOWER VES-NCC-109
FI-003-4-14 SEE DETAIL "F" DWG. 133453
FI-003-2-3 SEE DETAIL "A" DWG. 133450
FI-003-2-4 SEE DETAIL "A" DWG. 133450
STEAM JET CONT. SEE DETAIL "L" DWG 133449
DECON SOLUTION FROM 3"DCAF-2265 SEE DETAIL-"P" DWG-057179
CALCINER OFF-GAS
CALCINER CELL
TRANSPORT AIR RETURN
STANDBY
DILUTION AIR
DECON SOLUTION
DRAIN
CALCINER DRAIN
TRANSPORT AIR PLUS FINES
PRODUCT TRANSPORT
DRAIN TO FLUORIDE HOT SUMP TANK
OPEN TO ATMOS.
JET-NCC-557
MATCH LINE FOR CONTINUATION SEE DWG. 133419, SECT. 9
MATCH LINE DWG 133419
NOTE
1. ALL LINE #'S ON THIS DWG ARE PREFIXED WITH A "10". EXAMPLE: LINE #3818 IS 103818, ETC.
2. VALVE IS OPEN TO PROVIDE A VENT PATH AND DCS ACTIVATION OF THE VALVE HAS BEEN DISABLED.
3. VALVE FA-105-1 ON 8" FAAC-2452-1h HAS BEEN LOCKED CLOSED USING AN IMMOBILIZATION DEVICE.
4. CALCINER SYSTEM CLOSURE BOUNDARY (DOE/ID-10801).
RCRA EXEMPT
ALLIED CHEMICAL CORPORATION
IDAHO CHEMICAL PROGRAMS - OPERATIONS OFFICE
IDAHO FALLS, IDAHO
THIS DOCUMENT IS RELEASED 5-6-77 AND SUBSEQUENTLY CONTROLLED IN ACCORDANCE WITH ACC STANDARD PRACTICES.
SEE GENERAL NOTES, 133421
24 AS BUILT AS OF 4-19-04 SEE DAR 111356 DEJ 7-28-04
23 AS BUILT AS OF 11-13-03 SEE DAR 106697 DEJ 12-03-03
22 AS BUILT AS OF 11-5-01 SEE DAR 87036 MEW DEJ 12-13-01
21 SEE DAR 17372 DH LDW 2/23/99
NO DESCRIPTION APPROVED
REVISIONS
CPP AREA BLDG. NO. 659
MECHANICAL FLOW DIAGRAM
CALCINER CELL & FLOW METER CUBICLE
SHEET 5 OF 8
NEW WASTE CALCINING FACILITY
FLUOR
ENGINEERS AND CONSTRUCTORS, INC.
LOS ANGELES, CALIFORNIA
FOR
U.S. ENERGY R&D ADMINISTRATION
IDAHO OPERATIONS OFFICE
IDAHO FALLS, IDAHO
DWG. NO. 1495-CPP-659-F-112
FRAME NO. 5 of 8
SCALE NONE
DATE 5-6-77
INDEX CODE NUMBER
2000659 24287 133418
NCC
FLUOR CONTRACT No. 453904
CAD OVERLAY DRAWING FIELD VERIFIED OUT OF CELL R18
File: 133418-24.dwg
Path: Q:\CalcineClosure
Drawn in Model Space
Date: 07/21/04 - 2:17 P.M.
ID: KRESV

VES-NCC-107
HIGH EFFICIENCY CYCLONE
24" ID x 8'-0" OVERALL HEIGHT
DESIGN: 30 PSIG & 15" Hg VACUUM
@ 600° C 1½ HIGH EFFICIENCY INSULATION WITH SEALED SHROUD

JET-NCC-505-1 & 2
TRANSPORT AIR JETS

OPERATING CORRIDOR (LEVEL No. 2)

FLUIDIZING AIR PRE-HEATER ROOM

FLUIDIZING AIR BLOWER ROOM

ACCESS CORRIDOR (LEVEL NO. 3)

RETURN JET CUBICLE

CALCINER CELL

TAG NUMBERS FOR DETAIL "DD"
HS-105-10C HY-105-10 ZO-105-10C ZC-105-10C IAS-105-10
HS-107-1C HY-107-1 ZO-107-1C ZC-107-1C IAS-107-1

DETAIL "DD" TYP. 6 PLACES

TO TRANSPORT AIR CONTROL VALVE UPSTREAM OF HE-NCO-331

TRANSPORT AIR FROM TRANSPORT AIR HEATER HE-NCO-331

SEE DETAIL "O" DWG 057179

FI-003-2-25 SEE DETAIL "O" DWG 057178

FI-003-2-24 SEE DETAIL "N" DWG 057178

FI-003-4-25 SEE DETAIL "F" DWG 133453

FI-003-4-24 SEE DETAIL "F" DWG 133453

FI-003-4-26 SEE DETAIL "F" DWG 133453

FI-003-4-27 SEE DETAIL "F" DWG. 133453

CONNECT PURGE TO BOTTOM OF VALVE

BALL VALVE W/HANDLE OUTSIDE OF CUBICLE

JET-NCC-505-1

JET-NCC-505-2 (STANDBY)

RECIRC. DECON. SOLN FM. FLUORIDE HOT SUMP TANK P-NCC-219

TRANSPORT AIR RETURN STANDBY

DO NOT POCKET

CYCLONE OFFGAS TO QUENCH TOWER VES-NCC-109 DWG. 133423 SECT. 9

* ALL FITTINGS TO BE SCH 40 & TAPER BORED TO MATCH PIPE. FOR LINE 16"-PSAC-1801-1h ONLY.

16" PSAC-1800-1h [SCH. 40] DO NOT POCKET

MATCH LINE DWG 133419

MATCH LINE FOR CONTINUATION SEE DWG 133419 SECT 7

ARGON BOTTLES IN ELEVATOR ENTRY AREA

CALCINER DRAIN 3"-PSAB-1865

TRANSPORT AIR 3"-TAAB-2455 [SCH. 80S]

3"-TAAB-1802 [SCH. 80S]

DRAIN TO FLUORIDE HOT SUMP TANK 3"-PWAB-1864

1/2" BLAST OR PURGE AIR LINE IS STUBBED INTO 3" TRANSPORT LINE DIRECTLY OPPOSITE THE 2" STUB-IN

TO 35# STEAM HEADER

TO RETURN JET CUBICLE CHANGE ROOM DWG. 133402 SECT. 1 DET. A

TRANSPORT PIT PAD "B"

RETURN JET CHANGE ROOM

CONDENSATE

PRODUCT TRANSPORT

PAD "A"

PAD "C"

SEE GENERAL NOTES, 133421

NOTE
1. LINE Nos ON THIS DWG. ARE PREFIXED WITH A "10" EXAMPLE: LINE No 1806 IS 101806.

RCRA EXEMPT

ALLIED CHEMICAL CORPORATION
IDAHO CHEMICAL PROGRAMS - OPERATIONS OFFICE
IDAHO FALLS, IDAHO
THIS DOCUMENT IS RELEASED 5-6-77 AND SUBSEQUENTLY CONTROLLED IN ACCORDANCE WITH ACC STANDARD PRACTICES.

REV	DESCRIPTION	BY	APPROVED
43	AS BUILT AS OF 2-17-09 SEE DRF-325356		2/25/09
42	ASSESSED AND VERIFIED AS-BUILT AS OF 1/28/03 SEE DAR-98651		2/19/03
41	SEE DAR 19360	MEW	LDW 6-17-99
40	SEE DAR 17375	DH	MEL 2/18/99

REVISIONS

	BY	DATE
DRAWN	[illegible]	6-13-77
CHECKED	G. ROLAO	6-18-77
APPROVED	J. PAGE	5-2-77
APPROVED	[illegible]	6-6-77
APPROVED	[illegible]	5-2-77
APPROVED	[illegible]	5-3-77
ACC APPROVED	[illegible]	5-6-77

SCALE: NONE
DATE: 5-6-77

CPP AREA BLDG. NO. 659
MECHANICAL P&ID
CALCINER CELL & FLOW METER CUBICLE
SHEET 7 OF 8
NEW WASTE CALCINING FACILITY

FLUOR
ENGINEERS AND CONSTRUCTORS, INC.
LOS ANGELES, CALIFORNIA

U.S. ENERGY R&D ADMINISTRATION
IDAHO OPERATIONS OFFICE
IDAHO FALLS, IDAHO

DWG. NO. 1495-CPP-659-F-112 FRAME NO. 7 of 8 REV 43

INDEX CODE NUMBER
20006592428713342O

NCC

CADOVERLAY R14 GENERATED

File: 133420-43.dwg
Path: K:\INTEC Misc. Drafting\Control\CAD\CS\DH-DRF-325356
Date: 02/25/09 - 4:40 PM Layout Name: Model

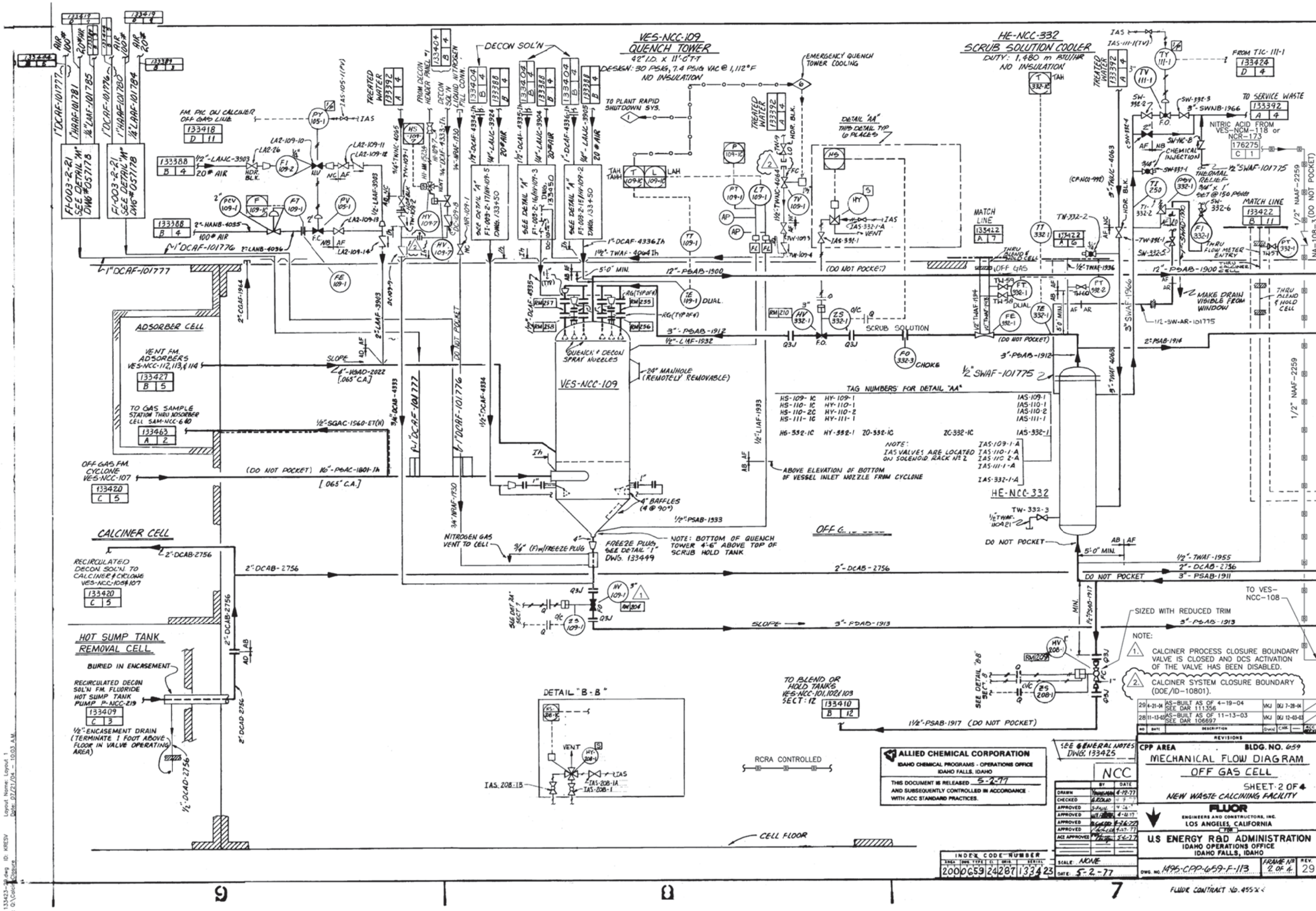

VES-NCC-109
QUENCH TOWER
42" I.D. x 11'-0" T-T
DESIGN: 30 PSIG, 7.4 PSIG VAC @ 1,112°F
NO INSULATION
HE-NCC-332
SCRUB SOLUTION COOLER
DUTY: 1,480 m BTU/HR
NO INSULATION
DECON SOL'N
EMERGENCY QUENCH TOWER COOLING
TO PLANT RAPID SHUTDOWN SYS.
TREATED WATER
FROM TIC-111-1
TO SERVICE WASTE
NITRIC ACID FROM VES-NCM-118 or NCR-173
CHEMICAL INJECTION
THERMAL RELIEF
MATCH LINE
THRU FLOW METER ENTRY
THRU CALCINER CELL
MAKE DRAIN VISIBLE FROM WINDOW
THRU BLEND & HOLD CELL
FM. PIC ON CALCINER OFF GAS LINE
ADSORBER CELL
VENT FM. ADSORBERS VES-NCC-112,113,&114
TO GAS SAMPLE STATION THRU ADSORBER CELL SAM-NCC-640
OFF GAS FM. CYCLONE VES-NCC-107
CALCINER CELL
RECIRCULATED DECON SOL'N. TO CALCINER & CYCLONE VES-NCC-105&107
HOT SUMP TANK REMOVAL CELL
BURIED IN ENCASEMENT
RECIRCULATED DECON SOL'N FM. FLUORIDE HOT SUMP TANK PUMP P-NCC-219
1/2"-ENCASEMENT DRAIN (TERMINATE 1 FOOT ABOVE FLOOR IN VALVE OPERATING AREA)
QUENCH & DECON SPRAY NOZZLES
24" MANHOLE (REMOTELY REMOVABLE)
4" BAFFLES (4 @ 90°)
NITROGEN GAS VENT TO CELL
FREEZE PLUG, SEE DETAIL "1" DWG. 133449
NOTE: BOTTOM OF QUENCH TOWER 4'-6" ABOVE TOP OF SCRUB HOLD TANK
ABOVE ELEVATION OF BOTTOM OF VESSEL INLET NOZZLE FROM CYCLONE
TAG NUMBERS FOR DETAIL "AA"
NOTE: IAS VALVES ARE LOCATED ON SOLENOID RACK No 2
DETAIL "AA" THIS DETAIL TYP 6 PLACES
DETAIL "B-B"
TO BLEND OR HOLD TANKS VES-NCC-101,102&103 SECT: 12
SIZED WITH REDUCED TRIM
TO VES-NCC-108
RCRA CONTROLLED
CELL FLOOR
MATCH LINE DWG. 133424 SECT. 6
NOTE:
1. CALCINER PROCESS CLOSURE BOUNDARY VALVE IS CLOSED AND DCS ACTIVATION OF THE VALVE HAS BEEN DISABLED.
2. CALCINER SYSTEM CLOSURE BOUNDARY (DOE/ID-10801).
ALLIED CHEMICAL CORPORATION
IDAHO CHEMICAL PROGRAMS - OPERATIONS OFFICE
IDAHO FALLS, IDAHO
THIS DOCUMENT IS RELEASED 5-2-77 AND SUBSEQUENTLY CONTROLLED IN ACCORDANCE WITH ACC STANDARD PRACTICES.
SEE GENERAL NOTES DWG. 133425
NCC
CPP AREA
BLDG. NO. 659
MECHANICAL FLOW DIAGRAM
OFF GAS CELL
SHEET 2 OF 4
NEW WASTE CALCINING FACILITY
FLUOR
ENGINEERS AND CONSTRUCTORS, INC.
LOS ANGELES, CALIFORNIA
U.S. ENERGY R&D ADMINISTRATION
IDAHO OPERATIONS OFFICE
IDAHO FALLS, IDAHO
INDEX CODE NUMBER
200 0659 24 287 133423
SCALE: NONE
DATE: 5-2-77
DWG. NO. 1495-CPP-659-F-113
FRAME No 2 OF 4
REV. 29
FLUOR CONTRACT No. 455X

JET-NCC-508
SCRUB HOLD TANK
DRAIN JET
CAPACITY : 20 GPM

P-NCC-208-1 & 208-2
SCRUB RECYCLE PUMPS
FLOW : 140 GPM
ΔP : 50-61 PSI
SP. GR. : 1.14-1.4
NO INSULATION

VES-NCC-108
SCRUB HOLD TANK
60" I.D. x 12'-0" T-T
DESIGN : 30 PSIG, 74 PSIG VAC @ 275°F
NO INSULATION

VS-NCC-511
VENTURI SCRUBBER
FLOW : 2650 FT³/MIN. GAS
35 GPM LIQUID
ΔP : 60 IN. W.C.
NO INSULATION

VES-NCC-111
VENTURI SCRUBBER K.O. DRUM
VESSEL : 30" DIA. x 6'-6"
DESIGN : 30 PSIG, 74 PSIG VAC. @ 350°F

ABANDONED IN PLACE

OPERATING CORRIDOR
(LEVEL № 2)

OFF GAS CELL

JET-NCC-508

VES-NCC-108

P-NCC-208-1

P-NCC-208-2 (STANDBY)

VS-NCC-511

VES-NCC-111

NOTE : BOTTOM OF VENTURI SCRUBBER K.O. DRUM 5'-9" MIN. ABOVE TOP OF SCRUB HOLD TANK

NOTE:
1. CALCINER PROCESS CLOSURE BOUNDARY VALVE IS CLOSED AND DCS ACTIVATION OF THE VALVE HAS BEEN DISABLED.

ALLIED CHEMICAL CORPORATION
IDAHO CHEMICAL PROGRAMS - OPERATIONS OFFICE
IDAHO FALLS, IDAHO
THIS DOCUMENT IS RELEASED 5-2-77
AND SUBSEQUENTLY CONTROLLED IN ACCORDANCE WITH ACC STANDARD PRACTICES.

RCRA CONTROLLED

CLASS 1 DOCUMENT

NO	DESCRIPTION	APPROVED
35	PRIOR HISTORY REMOVED, AS BUILT AS OF 06/16/11 SEE DRF-333591	JBM JLM 07/20/11

REVISIONS

IN-PLANT CODE NCC

	BY	DATE
DRAWN	Youngman	4-11-77
CHECKED	G. Rohd	4-19-77
APPROVED	[illegible]	4-22-77
APPROVED	[illegible]	4-26-77
APPROVED	[illegible]	5-2-77
ACC APPROVED	[illegible]	5-2-77

INDEX CODE NUMBER
AREA 20 | SYS 006 | UNIT 59 | SEQ 24 | SHEET 28 | REVISION 7 | 133424

DATE 5-2-77

CPP AREA BLDG. NO. 659
MECHANICAL FLOW DIAGRAM
OFF GAS CELL
SHEET 3 OF 4
NEW WASTE CALCINING FACILITY

FLUOR
ENGINEERS AND CONSTRUCTORS, INC.
LOS ANGELES, CALIFORNIA

U.S. ENERGY R&D ADMINISTRATION
IDAHO OPERATIONS OFFICE
IDAHO FALLS, IDAHO

DWG. NO. 1495-CPP-659-F-113 FRAME NO. 3 OF 4 REV. 35

FLUOR CONTRACT NO. 953504
CAD OVERLAY DRAWING

MATCH LINE DWG. 133423 SECT. 7

MATCH LINE DWG. 133425 SECT. 3

SEE GENERAL NOTES 133425

Date: 07/19/11 - 4:17 PM Layout Name: Model
ID: HCKEJB
133424-35.DWG
A:_Vault\Design\NMFO\NCC-DRE13591

EQUIPMENT LOCATION INDEX

EQUIPMENT Nº	SECTION Nº	DWG
HE-NCC-332	7	133423
HE-NCC-333	8	THIS DWG
P-NCC-208-1	6	133429
P-NCC-208-2	5	133424
P-NCC-210	1	THIS DWG
VES-NCC-108	5&6	133424
VES-NCC-109	8	133423
VES-NCC-110	2	THIS DWG
VES-NCC-111	5	133424
VES-NCC-511	5	133424
JET-NCC-508	6	133424

HE-NCC-333 CONDENSER
DUTY: 1,460 m BTU/HR
NO INSULATION

P-NCC-231 12 PUMP LUBRICATOR

VES-NCC-110 MIST ELIMINATOR
36" DIA. X 9'-4" T-T
DESIGN: 30 PSIG, 7.4 PSIG VAC @ 250°F
NO INSULATION

P-NCC-210 MIST ELIMINATOR WASH RECYCLE PUMP
FLOW: 12 GPM
ΔP: 60 PSI
SP.GR.: 1.1
NO INSULATION

NOTES:

1. FOR CONT. OF DECON. SOL'N. LINES, SEE DWG. F-RG
2. FOR CONT. OF UTILITY LINES, SEE DWG'S 133382 THRU 133393.
3. REFER TO DWG 133376 FOR FLOW DIAGRAM LEGEND, SYMBOLS AND ABBREVIATIONS.
4. DETAIL "AA", SECTION 7
5. FUTURE EQUIPMENT, ASSOCIATED PIPING & INSTRUMENT BALLOONS ARE SHOWN DASHED.
7. FISHER MODEL 546 (4-20 mA, 3-15 PSIG OR EQUAL; FIELD TO SUPPLY
8. LINES ½"-LIAF-1950 THRU 1953 PASS THRU BLEND & HOLD CELL, CALCINER CELL & FLOW METER CUBICLE ENTRY
9. ⅛" Ø HOLE DRILLED IN CHECK VALVE DISC TO ALLOW LINE DRAINAGE WHEN PUMP IS OFF.

ALLIED CHEMICAL CORPORATION
IDAHO CHEMICAL PROGRAMS - OPERATIONS OFFICE
IDAHO FALLS, IDAHO
THIS DOCUMENT IS RELEASED 5-2-77
AND SUBSEQUENTLY CONTROLLED IN ACCORDANCE WITH ACC STANDARD PRACTICES.

RCRA CONTROLLED

NO	DESCRIPTION	APPROVED	
24	AS-BUILT AS OF 7-23-02 SEE DAR 93177	MEW	DEJ 8-15-02
23	SEE DAR 18662	MEW	DEJ 7-1-99
22	SEE DAR 17376	DH	MEL 2/22/99

REVISIONS

CPP AREA ▸ BLDG. NO. 659

MECHANICAL FLOW DIAGRAM
OFF GAS CELL
SHEET 4 OF 4
NEW WASTE CALCINING FACILITY

FLUOR ENGINEERS AND CONSTRUCTORS, INC. LOS ANGELES, CALIFORNIA

U.S. ENERGY R&D ADMINISTRATION
IDAHO OPERATIONS OFFICE
IDAHO FALLS, IDAHO

NCC — CONTROLLED DOCUMENT CLASS I

	BY	DATE
DRAWN		4-11-77
CHECKED		4-19-77
APPROVED		4-26-77
APPROVED		4-27-77
APPROVED		4-26-77
APPROVED		4-27-77
ACC APPROVED		5-2-77

INDEX CODE NUMBER: 200G659 24 287 133425
SCALE: NONE
DATE: 5-2-77
DWG. NO. 1495-CPP-659-F-113 FRAME NO 4 OF 4 REV 24

FLUOR CONTRACT 16 459504
CAD OVERLAY DRAWING

Drawn in Model Space ID: MWHITELE
Date: 08/05/02 – 07:32 A.M.
File: 133423.DWG
Path: P:\NCR\dwgs

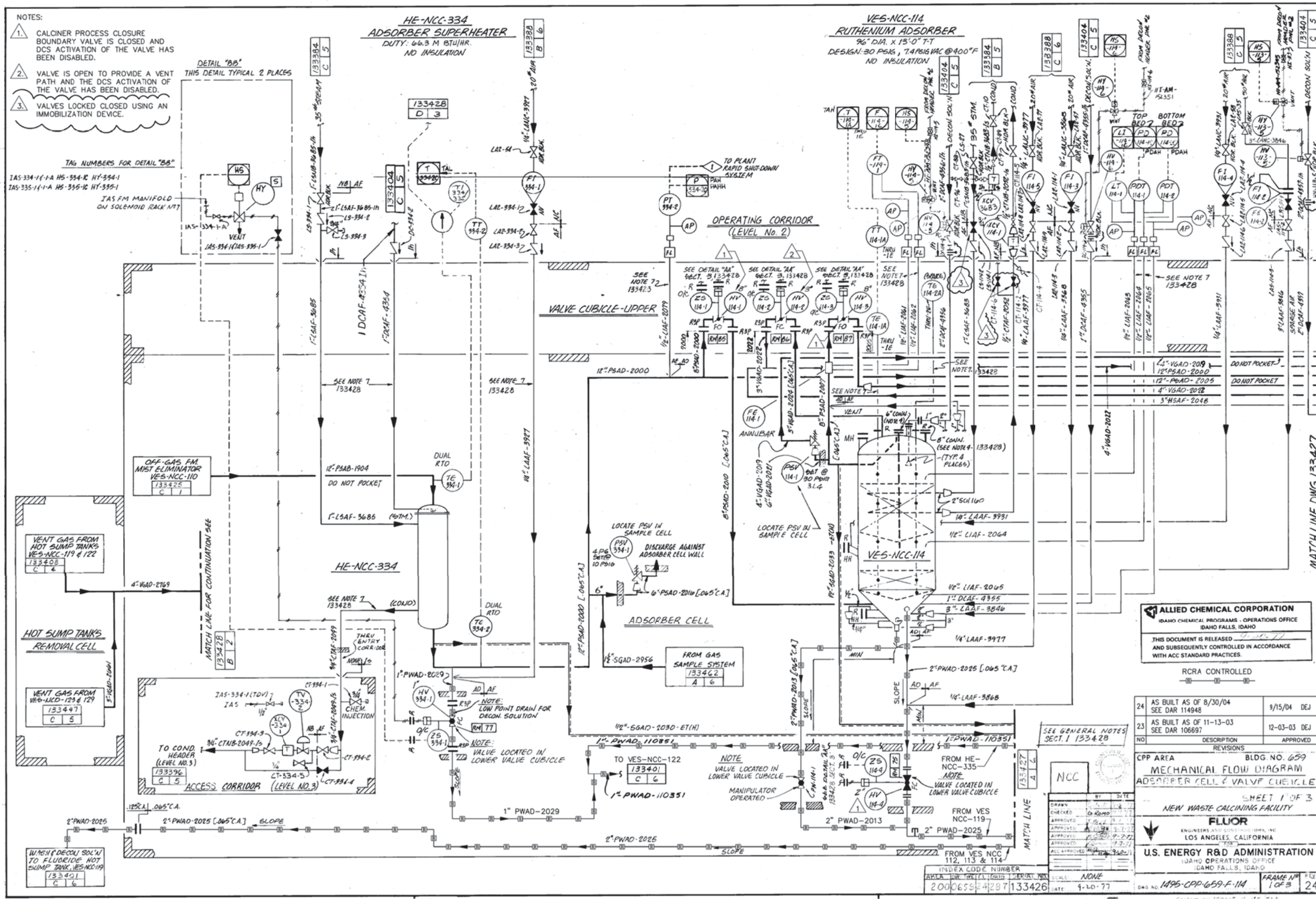
NOTES:
1. CALCINER PROCESS CLOSURE BOUNDARY VALVE IS CLOSED AND DCS ACTIVATION OF THE VALVE HAS BEEN DISABLED.
2. VALVE IS OPEN TO PROVIDE A VENT PATH AND THE DCS ACTIVATION OF THE VALVE HAS BEEN DISABLED.
3. VALVES LOCKED CLOSED USING AN IMMOBILIZATION DEVICE.
HE-NCC-334
ADSORBER SUPERHEATER
DUTY: 66.3 M BTU/HR.
NO INSULATION
VES-NCC-114
RUTHENIUM ADSORBER
96" DIA. x 13'-0" T-T
DESIGN: 30 PSIG, 7.4 PSIG VAC @ 400°F
NO INSULATION
DETAIL "BB"
THIS DETAIL TYPICAL 2 PLACES
TAG NUMBERS FOR DETAIL "BB"
IAS-334-1 & 1-A HS-334-1C HY-334-1
IAS-335-1 & 1-A HS-335-1C HY-335-1
IAS FM MANIFOLD ON SOLENOID RACK No 7
TO PLANT RAPID SHUT-DOWN SYSTEM
OPERATING CORRIDOR (LEVEL No. 2)
VALVE CUBICLE-UPPER
OFF-GAS FM MIST ELIMINATOR VES-NCC-110
VENT GAS FROM HOT SUMP TANKS VES-NCC-119 & 122
HOT SUMP TANKS REMOVAL CELL
VENT GAS FROM VES-NCD-123 & 129
ACCESS CORRIDOR (LEVEL NO. 3)
TO COND. HEADER (LEVEL NO. 3)
CHEM. INJECTION
MATCH LINE FOR CONTINUATION SEE
HE-NCC-334
ADSORBER CELL
LOCATE PSV IN SAMPLE CELL
DISCHARGE AGAINST ADSORBER CELL WALL
FROM GAS SAMPLE SYSTEM
TO VES-NCC-122
NOTE: VALVE LOCATED IN LOWER VALVE CUBICLE
MANIPULATOR OPERATED
FROM HE-NCC-335
FROM VES NCC-119
FROM VES NCC 112, 113 & 114
WASH & DECON SOL'N TO FLUORIDE HOT SUMP TANK, VES-NCC-119
MATCH LINE DWG 133427
ALLIED CHEMICAL CORPORATION
IDAHO CHEMICAL PROGRAMS - OPERATIONS OFFICE
IDAHO FALLS, IDAHO
THIS DOCUMENT IS RELEASED AND SUBSEQUENTLY CONTROLLED IN ACCORDANCE WITH ACC STANDARD PRACTICES.
RCRA CONTROLLED
24 AS BUILT AS OF 8/30/04 SEE DAR 114948 9/15/04 DEJ
23 AS BUILT AS OF 11-13-03 SEE DAR 106697 12-03-03 DEJ
NO DESCRIPTION APPROVED
REVISIONS
CPP AREA BLDG. NO. 659
MECHANICAL FLOW DIAGRAM
ADSORBER CELL & VALVE CUBICLE
SHEET 1 OF 3
NEW WASTE CALCINING FACILITY
FLUOR
ENGINEERS AND CONSTRUCTORS, INC
LOS ANGELES, CALIFORNIA
U.S. ENERGY R&D ADMINISTRATION
IDAHO OPERATIONS OFFICE
IDAHO FALLS, IDAHO
DWG NO. 1495-CPP-659-F-114
FRAME No 1 OF 3
REV 24
SCALE NONE
DATE 9-20-77
INDEX CODE NUMBER
200 0659 24 287 133426
CAD OVERLAY DRAWING

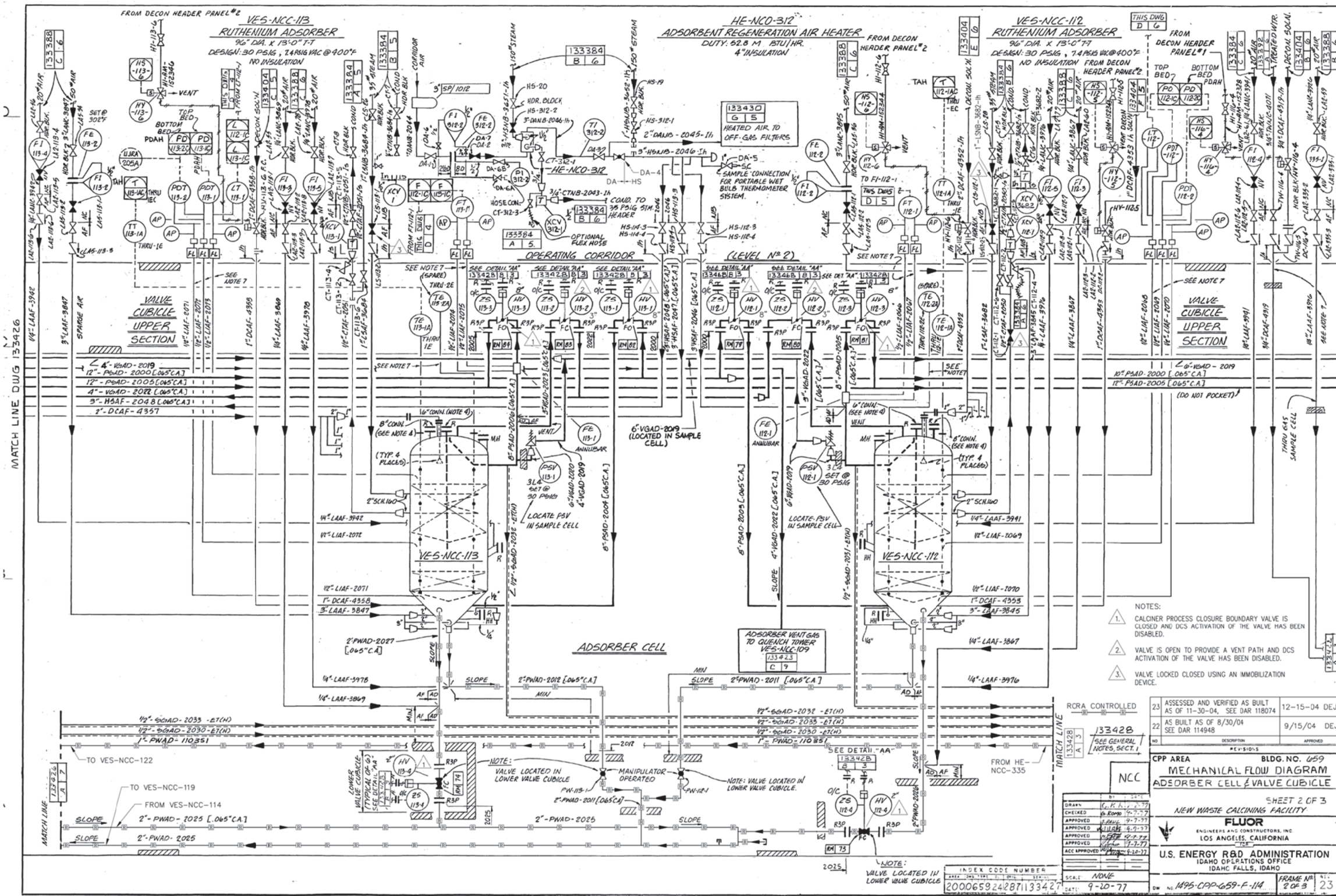

NOTES:

1. CALCINER PROCESS CLOSURE BOUNDARY VALVE IS CLOSED AND DCS ACTIVATION OF THE VALVE HAS BEEN DISABLED.
2. VALVE IS OPEN TO PROVIDE A VENT PATH AND DCS ACTIVATION OF THE VALVE HAS BEEN DISABLED.
3. VALVE LOCKED CLOSED USING AN IMMOBILIZATION DEVICE.

RCRA CONTROLLED

NO	DESCRIPTION	APPROVED
23	ASSESSED AND VERIFIED AS BUILT AS OF 11-30-04, SEE DAR 118074	12-15-04 DEJ
22	AS BUILT AS OF 8/30/04 SEE DAR 114948	9/15/04 DEJ

REVISIONS

CPP AREA BLDG. NO. 659

MECHANICAL FLOW DIAGRAM
ADSORBER CELL & VALVE CUBICLE

SHEET 2 OF 3

NEW WASTE CALCINING FACILITY

FLUOR
ENGINEERS AND CONSTRUCTORS, INC.
LOS ANGELES, CALIFORNIA

U.S. ENERGY R&D ADMINISTRATION
IDAHO OPERATIONS OFFICE
IDAHO FALLS, IDAHO

DW NO. 1495-CPP-659-F-114 FRAME No. 2 OF 3 REV. 23

SCALE NONE
DATE 9-20-77

INDEX CODE NUMBER
2000659 24 287 1133427

FLUOR CONTRACT No. 453504

CAD OVERLAY DRAWING

VES-NCC-116
MIST COLLECTOR
12'-0" DIA. X 16'-6" T-T
DESIGN: 30 PSIG, 7.4 PSIG VAC @ 250°F
NO INSULATION

HE-NCC-335
PROCESS GAS REHEATER
DUTY: 88.6 M BTU/HR
NO INSULATION

HE-NCC-336
VENT CONDENSER
DUTY: 47.2 M BTU/HR
NO INSULATION

VES-NCC-136
VENT CONDENSER
K.O. DRUM
16'-0" O.D. X 5'-6" T-T/S
DESIGN: 30 PSIG, 7.6 PSIG VAC @ 250°F
NO INSULATION

DETAIL "AA"
THIS DETAIL TYP.
14 PLACES

SEE SECT 1 FOR TAG NO'S

OPERATING CORRIDOR
(LEVEL NO. 2)

INERTS FROM CONDENSATE COLLECTION UNIT 133388 D 16

FROM DECON HEADER PAR. #1

FROM PIC-122-1 133408 D 5

FROM DECON HEADER PAR. #2

3/4" VG-NC -104158

ADSORBER CELL

ACCESS CORRIDOR - (LEVEL NO. 3)

THRU ENTRY CORRIDOR

OFF GAS CELL

MATCH LINE DWG 133427

MATCH LINE 133427 A 4

MATCH LINE FOR CONT. SEE 133426 B 9

VENT GAS FROM VES-NCC-101, 102, 103 & 104 133410 A 12

TO OFF GAS FILTERS F-NCC-130-1 THRU -130-4 133429 E 8

TO GAS SAMPLE STATION SAM-NCC-640 133462 A 4 / 133463 D 3 / D 2

CONSENSATE TO SCRUB HOLD TANK VES-NCC-108 133425 A 2

TREATED WATER 133392 B 6

DECON. SOL'N 133404 B 5

LIQUID NITROGEN FILL CONNECTION

2ND LEVEL FLR

NOTE:
VALVE LOCATED IN LOWER VALVE CUBICLE

NOTE:
LOCATE VALVE IN LOWER VALVE CUBICLE

EQUIPMENT LOCATION INDEX

EQUIPMENT No.	SECTION	DWG
HE-NCC-312	5	133427
HE-NCC-334	8	133426
HE-NCC-335	3	THIS DWG.
HE-NCC-336	2	THIS DWG
VES-NCC-112	4	133427
VES-NCC-113	5	133427
VES-NCC-114	7	133426
VES-NCC-116	3	THIS DWG
VES-NCC-136	2	THIS DWG

ALLIED CHEMICAL CORPORATION
IDAHO CHEMICAL PROGRAMS - OPERATIONS OFFICE
IDAHO FALLS, IDAHO

THIS DOCUMENT IS RELEASED 9-20-77
AND SUBSEQUENTLY CONTROLLED IN ACCORDANCE WITH ACC STANDARD PRACTICES.

GENERAL NOTES

1. FOR CONT. OF DECON. SOL'N. LINES, SEE DWG.S 133403, 133404 & 133405
2. FOR CONT. OF UTILITY LINES, SEE DWG.S 133382 THRU 133393
3. REFER TO DWG 133376 FOR FLOW DIAGRAM LEGEND, SYMBOLS AND ABBREVIATIONS.
4. SILICA GEL FILL & REMOVAL LINES TO BE EXTENDED ABOVE ADSORBER PIPING.
5. DETAIL "AA" SECTION 3 133428
6. FUTURE EQUIPMENT, ASSOCIATED PIPING & INSTRUMENT BALLOONS ARE SHOWN DASHED.
7. THESE LINES GO TO & FROM SOUTH OPERATING CORRIDOR, DO NOT PASS THRU VALVE CUBICLE; UTILITY LINES PASS THRU SAMPLE CELL SENSING LINES PASS THRU OFF GAS CELL.

TAG NO'S. FOR DETAIL "AA" SECT. 3

HS-112-1C HY-112-1	IAS-112-1 ¢-1-A
HS-112-2C HY-112-2	IAS-112-2 ¢-2-A
HS-112-3C HY-112-3	IAS-112-3 ¢-3-A
HS-112-4C HY-112-4	IAS-112-4 ¢-4-A
HS-113-1C HY-113-1	IAS-113-1 ¢-1-A
HS-113-2C HY-113-2	IAS-113-2 ¢-2-A
HS-113-3C HY-113-3	IAS-113-3 ¢-3-A
HS-113-4C HY-113-4	IAS-113-4 ¢-4-A
HS-114-1C HY-114-1	IAS-114-1 ¢-1-A
HS-114-2C HY-114-2	IAS-114-2 ¢-2-A
HS-114-3C HY-114-3	IAS-114-3 ¢-3-A
HS-114-4C HY-114-4	IAS-114-4 ¢-4-A
HS-116-1C HY-116-1	IAS-116-1 ¢-1-A
HS-116-2C HY-116-2	IAS-116-2 ¢-2-A

RCRA CONTROLLED
VOG

NO	DESCRIPTION	APPROVED
	REVISIONS	
25	AS-BUILT AS OF 10/10/2013, INCORP'D FDC-8894 AND 9214, SEE DRF-340272	10/17/2013
24	REMOVED PRIOR REVISION HISTORY, ASSESSED AND VERIFIED AS-BUILT AS OF 1/28/03 SEE DAR-98651	2/19/03

CONTROLLED DOCUMENT CLASS 1

CPP AREA BLDG. NO. 659
MECHANICAL FLOW DIAGRAM
ADSORBER CELL & VALVE CUBICLE
SHEET 3 OF 3
NEW WASTE CALCINING FACILITY

FLUOR
ENGINEERS AND CONSTRUCTORS, INC
LOS ANGELES, CALIFORNIA

U.S. ENERGY R&D ADMINISTRATION
IDAHO OPERATIONS OFFICE
IDAHO FALLS, IDAHO

	BY	DATE
DRAWN	G. K. A	9-2-77
CHECKED	G. Ronto	9-7-77
APPROVED	J. PAUL	9-7-77
APPROVED	[illegible]	9-7-77
APPROVED	[illegible]	9-8-77
APPROVED	[illegible]	9-7-77
ACC APPROVED	[illegible]	9-20-77

SCALE NONE
DATE 9-20-77

DWG. NO. 1495-CPP-659-F-114 FRAME NO. 3 OF 3 REV. 25

FLUOR CONTRACT No. 493504

INDEX CODE NUMBER
AREA 200 | DOM. TYPE 0659 | CL. 24 | MFR. 28 | SERIAL 133428

File: 133428-25.dwg
Path: A:\NTFC_Misc\DRF-340272_Steam
Date: 10/16/13 - 5:09 PM Layout Name: Model

3 2 1

D C B A

FORMAT3-REV CPP

EQUIPMENT LOCATION INDEX

NUMBER	SHEET	SECTION
HE-NCC-350	2	6
HE-NCC-351	1	6
JET-NCC-507	3	6
VES-NCC-150	2	4
VES-NCC-152	3	3

KEY DIAGRAM

NORTH OPERATING CORRIDOR
VALVE CUBICLE
BLEND & HOLD CELL
OFF-GAS CELL
SOUTH OPERATING CORRIDOR
SOUTH ACCESS CORRIDOR BELOW

NOTES:

1) THESE LINES PASS FROM/TO THE SOUTH OPER. CORRIDOR THROUGH THE OFF GAS CELL AND DO NOT PASS THROUGH THE VALVE CUBICLE. (SEE KEY DIAGRAM)
2) THESE LINES PASS FROM/TO THE SOUTH ACCESS CORRIDOR THROUGH THE OFF GAS CELL AND DO NOT PASS THROUGH THE VALVE CUBICLE. (SEE KEY DIAGRAM)
3) FULL INSTRUMENT NUMBERS ARE PRECEDED WITH "NCC". I.E "HV-351-4" ABBREVIATED AT DCS TO "351-4".
4) ALL SPARE THERMOCOUPLE WIRES SHALL BE ROUTED THRU THE CORRIDOR WALL & JUNCTION BOX TO DCS TERMINAL CABINET.
5) INTERLOCK PREVENTS SIMULTANEOUSLY CLOSING VENT AND DRAIN (HS 351-2C AND HS 351-4C).
6) FOR STEAM SHUTDOWN INTERLOCK SEE DETAIL "G" DRAWING 092827
7) FOR AUTOMATIC LEVEL CONTROL LOGIC SEE DETAIL "H" SHEET 5 SECTIONS 3 & 4.
8) ORIGINAL SIGNATURES UNREADABLE.
9) LINE 2" PW-AB-108257 SERVES A DUAL PURPOSE. LIQUID TRANSFER TO VES-NCC-119 AND NON-CONDUCTABLE VENT TO VES-NCC-101.

RCRA CONTROLLED
RCRA EXEMPT
VOG

"THIS DRAWING IS FOR GENERAL INFORMATION ONLY. THE SUBCONTRACTOR SHALL REFER TO OTHER DRAWINGS AND TO SPECIFICATIONS FOR ACTUAL EXTENT, SIZE AND LOCATIONS OF SERVICES, MATERIALS, OR WORK TO BE PERFORMED UNDER THE CONTRACT."

REV	DESCRIPTION	DRAFTER	APPROVED
16	AS BUILT AS OF 9-16-03 SEE DAR 104747 & 104748	DEJ 9/16/03	DEJ 9/16/03
15	ASSESSED AND VERIFIED AS-BUILT AS OF 06/09/03 FOR SHT 3 ONLY SEE DAR 102444	W.H. 06/25/03	V.K.J. 07/01/03

REV STATUS OF SHEETS

SHEET	1	2	3	4	5
REV	16	16	15	14	14

FLUOR
CONTRACT NO. 840304
FOR
U.S. DEPARTMENT OF ENERGY
IDAHO OPERATIONS OFFICE
IDAHO FALLS, IDAHO
CONTRACT DE-AC07-84ID12401

IN-PLANT CODE: NCC

CPP AREA — BLDG 659

HIGH LEVEL LIQUID WASTE EVAPORATOR

P & ID

DRAWN BY	ENGR.
G. ROMO	S. KIM
CHECKED BY	DATE 11-3-86
SUPERVISOR G. ROMO	DATE 11-3-86
SUPV. ENGR.	DATE 11-3-86
PROJ/ENGR. MGR.	DATE 1-13-87
CLIENT	DATE 1-18-87

INDEX CODE NUMBER				DWG NO.	REV.
AREA	DWG TYPE	CL.	ORIG.	134251	16
200	0659	24	287	SHEET 1 OF 5	

SCALE: NONE | SPEC CODE | WORK REQUEST NO. 86-40 | A/E SHEET NO. F-2

ID: JUDYDE
Drawn in Model Space
Date: 09/16/03 - 2:56 P.M.
File: 134251-16.dwg
Path: O:\Judyde\Ffs
CadOverlay Generated

FORMAT02-REV 3.0

REVISIONS			
REV	DESCRIPTION	DATE	APPROVED

NORTH OPER. CORR.

VALVE CUBICLE

BLEND & HOLD CELL

HE-NCC-350

HE-NCC-350 REBOILER

SHELL DESIGN: 150 PSIG @ 600°F
TUBE DESIGN: 100 PSIG @ 400°F

VES-NCC-150

VES-NCC-150 FLASH COLUMN

6'-6" I.D. x 12'-9 3/8" T/T
DESIGN: 100 PSIG @ 300°F

MATCH LINE – SEE SHEET 3

MATCH LINE – SEE SHEET 1

SIZE	INDEX CODE NUMBER					DRAWING NO.	REV
	AREA	TYPE	SEQ.	ORIG.			
D	200	0659	24	287		134251	16
SCALE NONE					SHEET 2 OF 5		

Drawn in Model Space
Date: 09/16/03 – 3:02 P.M.

File: 1342510Z-16.dwg
Path: O:\Update\Tiffs

CadOverlay Generated

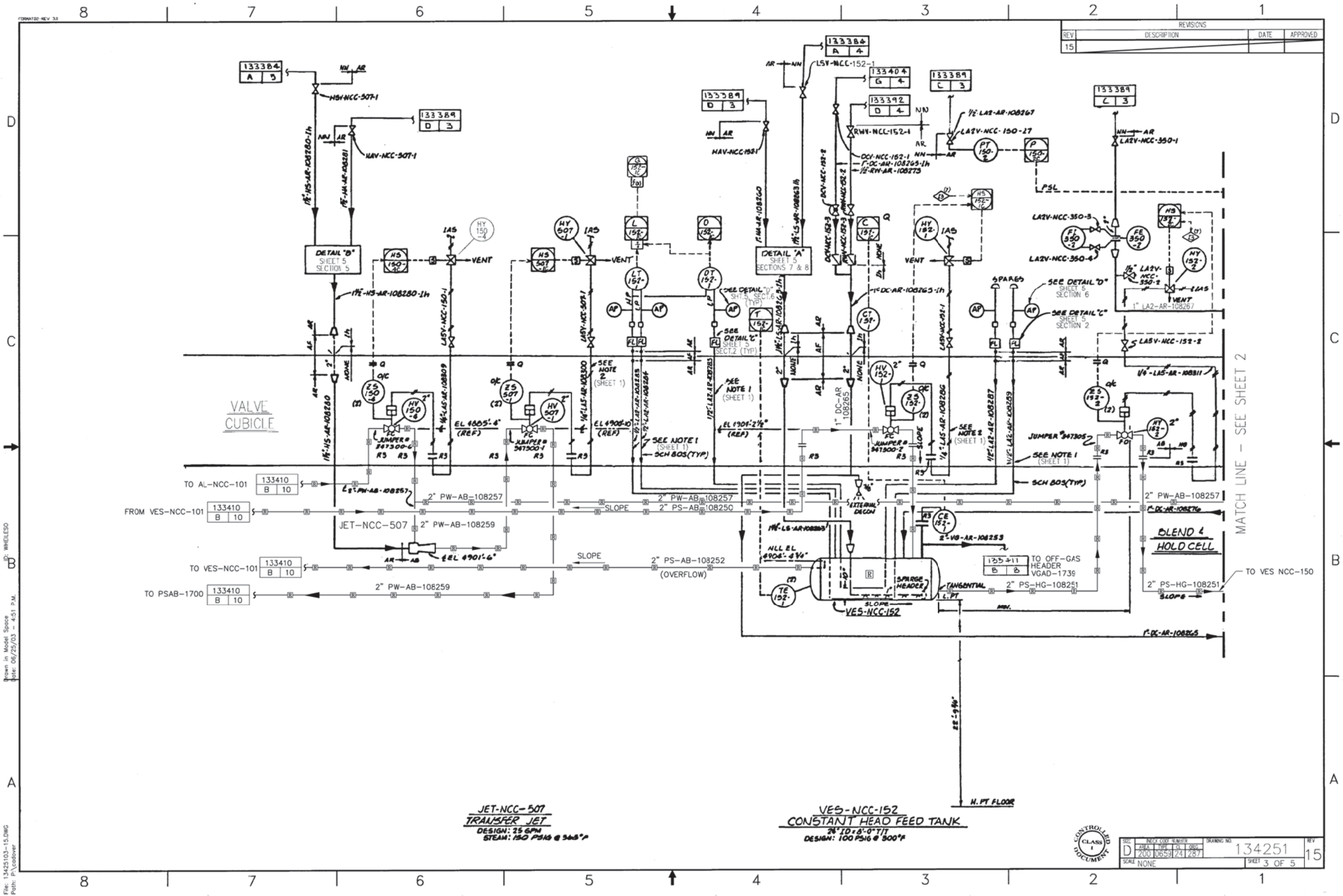

REVISIONS
REV | DESCRIPTION | DATE | APPROVED
15
VALVE CUBICLE
DETAIL "B" SHEET 5 SECTION 5
DETAIL "A" SHEET 5 SECTIONS 7 & 8
TO AL-NCC-101
FROM VES-NCC-101
TO VES-NCC-101
TO PSAB-1700
JET-NCC-507
2" PW-AB-108257
2" PW-AB-108259
2" PS-AB-108250
2" PS-AB-108252
(OVERFLOW)
SLOPE
TO OFF-GAS HEADER VGAD-1739
2" PS-HG-108251
TO VES NCC-150
BLEND & HOLD CELL
MATCH LINE - SEE SHEET 2
VES-NCC-152
H. PT FLOOR
JET-NCC-507
TRANSFER JET
DESIGN: 25 GPM
STEAM: 150 PSIG @ 365°F
VES-NCC-152
CONSTANT HEAD FEED TANK
24" ID x 8'-0" T/T
DESIGN: 100 PSIG @ 300°F
CONTROLLED DOCUMENT CLASS I
SIZE D
INDEX CODE NUMBER
AREA 200 TYPE 0659 CL 24 ORIG 287
DRAWING NO. 134251
REV 15
SCALE NONE
SHEET 3 OF 5

REVISIONS	
REV	DESCRIPTION
8	AS-BUILT AS OF 11/15/2016, INCORP'D FDC-11015, 11029, UPDATED TITLE BLOCK, SEE DRF-352153
9	AS-BUILT AS OF 06/08/2017, INCORP'D FDC-11128, 11289, UPDATED TITLE BLOCK, SEE DRF-354837

AL-NCR-550

40 GPH LIQUID MAX. DESIGN
0.315 SCFM MAX. DESIGN

JET-NCR--506

20 GPM LIQUID
-7 FT. SUCTION HEAD
50 FT. DISCHARGE HEAD
100 PSIG STEAM

NOTES

1. INSTALL BUG PROOF VENTS – 3/8" SS-600-C-MD SWAGELOK.
2. FOR LEGEND SEE DWG 176273.
3. VALVES NAV-NCR-26 & NAV-NCR-27 ARE OPERATED MANUALLY BY EXTENSION HANDLES THRU GRATING.

LOW LEVEL DECON ROOM

OUTSIDE WALL OF NWCF

133378 A 11

133378 A 11

133378 A 11

(SEE NOTE 1) VENT TO ATMOS

CTV-NCR-92

LSV-NCR-92

PSV-NCD-550-2 (FILTER/REGULATOR)

1/2-HI-NN-151692

HIN-NCR-100

1/2-LI2-AR-151692

L12V-NCR-10

L12V-NCR-15

L12V-NCR-13

PSV-NCR-171-1 (FILTER/REGULATOR)

1/2-LI2-NN-151694

L12V-NCR-11

LI2V-NCR-14

1/2-LI2-AR-151677

L12V-NCR-9

1/2-LI2-NN-151685

PSV-NCR-171-2 (FILTER/REGULATOR)

LI2V-NCR-16

PSV-NCR-550-1 (FILTER/REGULATOR)

CONTROL PANEL CP-NCD-902

STORAGE TANK ENCLOSURE

AR NN

CTV-NCR-93

3/8-LI2-AM-151692

3/8-LI2-AM-151694

1/2-CT-AR-152959

3/8-AA-AM-151735

1-LS-NN-151698

3/4-VG-AR-151681 0.315 SCFM MAX. DESIGN

3/4-VG-AR-151687

1/2-NA-AD-151680

1/2-LI2-AR-151692 0.315 SCFM

FI-550-1

LI2V-NCR-3

LI2V-NCR-18

AIRLIFT CONTROL

HEAD TANK VES-NCR-173

HEAD TANK FEED 40 GPH LIQUID MAX. DESIGN 0.315 SCFM MAX. DESIGN

(SEE NOTE 1)
ATMOS 3/8 L12-AR-151733
ATMOS 3/8 AA-AM-151732

AAV-NCR-3

AT-2443-1

AAV-NCR-5

PDI 2443-1

3/4-VG-AR-151687 0.740 SCFM MAX. DESIGN

1-NA-AD-151684

1-NA-AD-151674

3/8-LI2-AM-151694

3/8-LI2-AM-151695

3/8-LI2-AM-151696

1-LS-AR-152960

AAV-NCR-2

L12V-NCR-19

STEAM UNIT HEATER UH-NCR-201

STR-NCR-601

CTV-NCR-90

LSV-NCR-95

NAV-NCR-58

1/2" NAV-AD-155475

AD

AM

NAV-NCR-59

NAV-NCR-60

EL. 4918'4"

PRESSURE

1-PL-AD-152039

3/8-LI2-AM-151697 (SUMP LEVEL PROBE)

3/4-LS-AR-151698

LSV-NCR-97

AR NN

LSV-NCR-98

AR NN

L12V-NCR-20

3/8-LI2-AM-151696

L12V-NCR-21

L12V-NCR-22

3/8-LI2-AM-151697

ATMOS

AAV-NCR-1

ENCLOSURE PRESSURE REFERENCE

3/8-AA-AM-151699

XCV-NCR-2

CTV-NCR-91

1/2"

CAP

24 22 19 50 17 21 20 23 16

SPARE LEVEL/ DENSITY PROBES

DENSITY

LEVEL / DENSITY

RELOCATED 22,500 GAL. STORAGE TANK VES-NCR-171

8.3"

28 29

NAV-NCR-51

A -NCR-2443-1 HNO 3

4-20mA

AIA -NCR-2443-1

133379 A 9

SGV-NCR-1

1/2-SG-AM-151704

RAH R

CAM 952-53

952-53C

NAV-NCR-33

RE-953-59

RAM 953-59

RAH R 953-59C

TAL T 2443-1C

TIT 2443-1

TE-2443-1

NWCF LOW LEVEL DECON ROOM 415

SUCTION LINE

PAN

ROOM 417 BARREL STATION

SST LINER

NAV-NCR-54

TE-171-1

1-NA-AD-152957

NAV-NCR-24

FE-171-1

1/2"

2"

1/2"

1-NA-AD-151678

3/4" VG-AR-151687 1.06 SCFM MAX. DESIGN

RCRA CONTROLLED

2-NA-AD-151680

1/2-NA-AD-151680

JET-NCR-506

NAV-NCR-28

NAV-NCR-81

NAV-NCR-57

AL-NCR-550

NAV-NCR-27 NORM. CLOSED

1-NA-AD-151674 ENCASED LINE 40 GPH MAX DESIGN 20 FT. HEAD

176275 A 7

TAL T 171-1C

TIT 171-1

FAL F 171-C

FI 171-1

FT 171-1

356596 B 3 SHT 10

1-PL-AD-152039 ENCASED LINE

00S ME-174-1

1/2-NA AD-151722

1-NA-AD-151679 (BYPASS)

NAV-NCR-82

NAV-NCR-26

SU-NCR-174 (SUMP)

ME-174-2 00S

MJAH 174-1C

MSH 174-1

MJI 174-1

ENCASEMENT DRAIN AT LOW POINT

NOTE:

1. VALVE NAV-NCR-81 HAS REINFORCED PTFE SEATS.

PAH P 171-1C

LAL LAH L 171-1C

PAH P 171-1C

LAH L 174-1C

3/8-LI2-AM-151694

3/8-LI2-AM-151695

3/8-LI2-AM-151696

3/8-LI2-AM-151697

LI2V-NCR-4

LI2V-NCR-5

LI2V-NCR-6

LI2V-NCR-7

FI-003-2-35

FI-003-2-36

FI-003-2-34

FI-003-2-33

DIT 171-1

LIT 171-1

PIT 171-1

LIT 174-1

H L

INTERNAL (REF)

STORAGE TANK DENSITY

STORAGE TANK LEVEL

SUMP LEVEL

3/8-LI2-AM-151700

3/8-LI2-AM-151702

3/8-LI2-AM-151701

3/8-LI2-AM-151712

3/8-LI2-AM-151695

3/8-LI2-AM-151724

AAV-NCR-4

3/8-AA-AM-151734

SIGNATURES/DATES APPLY TO CURRENT RELEASE ONLY	SIGN AND DATE
DESIGN: NA	– –
DRAFTER: A. KEY	Angela L Key, Portage 2017.06.08 13:16:35 -06'00'
TECHNICAL CHECK: NA	– –
ENG GROUP SUPERVISOR: NA	– –
DESIGN LEAD/AUTHORITY: J. BRYANT	Jeffrey W. Bryant, Fluor Idaho 2017.06.08 13:21:21 -06'00'
DRAFTING CHECK/ EFFECTIVE DATE: K. KELLER	Kris Keller, Fluor Idaho 2017.06.08 13:35:50 -06'00'
PROJECT NUMBER: NA	
DRF NUMBER: NA	

Idaho Cleanup Project Core Fluor IDAHO

CPP BLDG. 659
LET & D
ACID RECYCLE SYSTEM

PIPING & INSTRUMENTATION DIAGRAM

SIZE	INDEX CODE NUMBER				DWG-	REV
	AREA	TYPE	CL	ORIG		
D	200	0659	24	220	176274	9
SCALE: NONE					SHEET 1 OF 1	

File: 176274-9.dwg
Path: K:\NTC\Misc\DRF-354837
Layout Name: 176274
Date: 06/08/17 - 9:18 AM
ID: KEYAL

FMT-01-ICP REV 2017-02-28

REVISIONS	
REV	DESCRIPTION
6	AS-BUILT AS OF 11/5/2015, PRIOR HISTORY REMOVED, INCORP'D FDC-10610, 5646 SEE DRF-347059
7	AS-BUILT AS OF 06/08/2017, INCORP'D FDC-11289, UPDATED TITLE BLOCK, SEE DRF-354837

HOT SUMP TANK CELL

SOUTH OPERATING CORRIDOR

OFF GAS CELL

HAV-NCR-100

1/2-HA-NN-151726

133387 A 8

HAV-NCR-103

1/2" HA-NN-151726

1/2" HA-NN-151727

HA-101

HY-110-8

1/4-HA-AM-151730

1/4-HA-AM-151731

1/4-HA-AM-152956

1/2-HA-NN-151727

EXH.

HY-108-8

HS-110-8C

HS-108-8C

1/4-HA-AM-152955

EXH.

1/4-HA-AM-151728

HS-119-8C

EXH.

HY-119-8

1/4-HA-AM-151729

1/2" NA-AN-2258

FROM NCM-118

133384 C 5

ZS-110-8-1

ZS-110-8-2

HV-110-8

NAV-NCR-46

NAV-NCR-41

1/2-NA-AD 151675

FIT-110-7

M

FV-110-7

NAV-NCR-42

FE-110-7

NAV-NCR-31

1/2-NA-AD-2258

133425 D 2

TO VES-NCC-110

NAV-NCR-74

NAV-NCR-73

1-NA-AD-151676

1/2"

ZS-108-8-1

ZS-108-8-2

NAV-NCR-39

1/2"

ZS-119-8-1

ZS-119-8-2

NAV-NCR-43

1-NA-AD-151674

HV-119-8

DCV-NCR-147

133403 C 2

NAV-NCR-36

FIT-108-7

M

FV-108-7

133384 C 5

FROM NCM-118

HV-108-8

NAV-NCR-40

FE-108-7

NAV-NCR-32

1/2-NA-AD-2259

133423 D 7

TO VES-NCC-108

TO VES-NCC-119 133409 C 2

2-DC-AD-4310

NAV-NCR-55

2-DCAF-4310

(P-21) WEST VALVE BOX

MEANCO 1 OUT OF SERVICE

1/2" NA-AN-2259

(P-22) EAST VALVE BOX

MEANCO 2 OUT OF SERVICE

NAV-NCR-52

1/2" VALVE BOX DRAIN

NAV-NCR-50

1/2" VALVE BOX DRAIN

1/2" FLEXIBLE TUBING

CARBOY

1/2" FLEXIBLE TUBING

CARBOY

F 110-7C

F 108-7C

133428 D 3

SOUTH OPERATING CORRIDOR

NAV-NCR-71

NAV-NCR-72

UTILITY CORRIDOR

1/2" ENCASEMENT DRAIN AT LOW POINT

8"

NAV-NCR-49

RCRA CONTROLLED

176274 A 3

3/4-VG-AR-151687

1-NA-AD-151674 ENCASED LINE

1/2" FLEXIBLE TUBING

CARBOY

NOTES

1. REMOVED
2. FOR LEGEND SEE DWG 176273.
3. DELETE SYSTEM LEAK TEST AT FINAL TIE-IN OF 3/4" VGAR-151687 TO 3/4" VGNC-4158.
4. VALVES NAV-NCR-43, -71 AND -72 HAVE PTFE SEATS.

SIGNATURES/DATES APPLY TO CURRENT RELEASE ONLY	SIGN AND DATE
DESIGN: NA	– –
DRAFTER: A. KEY	Angela L Key Portage 2017.06.08 13:17:34 -06'00'
TECHNICAL CHECK: NA	– –
ENG GROUP SUPERVISOR: NA	– –
DESIGN LEAD/AUTHORITY: J. BRYANT	Jeffrey W. Bryant Fluor Idaho 2017.06.08 13:32:06 -06'00'
DRAFTING CHECK/ EFFECTIVE DATE: K. KELLER	Kris Keller Fluor Idaho 2017.06.08 13:36:25 -06'00'
PROJECT NUMBER: NA	
DRF NUMBER: NA	

Idaho Cleanup Project Core Fluor IDAHO

CPP BLDG. 659
LET & D
ACID RECYCLE SYSTEM

PIPING & INSTRUMENTATION DIAGRAM

SIZE	INDEX CODE: NUMBER				DWG-	REV
	AREA	TYPE	CL	ORIG		
D	200	0659	24	220	176275	7
SCALE: NONE					SHEET 1 OF 1	

File: 176275-7.dwg
Path: K:\INTEC Misc\DRF-354837
Date: 06/08/17 – 9:19 AM | Layout Name: Layout1
ID: KEYAL

FMTAE-REV. 0

NOTE:

1. THE VALVE SUB-AREA DESIGNATORS (WL, WM, ETC.) AS SHOWN ON THIS FLOWSHEET MAY NOT BE INCLUDED ON ALL OF THE PERMANENTLY ATTACHED VALVE TAGS.

REVISIONS			
REV	DESCRIPTION	DATE	APPROVED
6	SEE DAR 46546 JMT	7-19-00	VEL
7	AS BUILT AS OF 01-03-2001 SEE DAR 71537 HS	LDW	02-08-2001
8	AS-BUILT AS OF 01/31/2013 SEE DRF-338286	2/19/13	KK
9	AS-BUILT AS OF 03/25/2015, INCORP'D FDC-10355, SEE DRF-344976	4/29/2015	KK

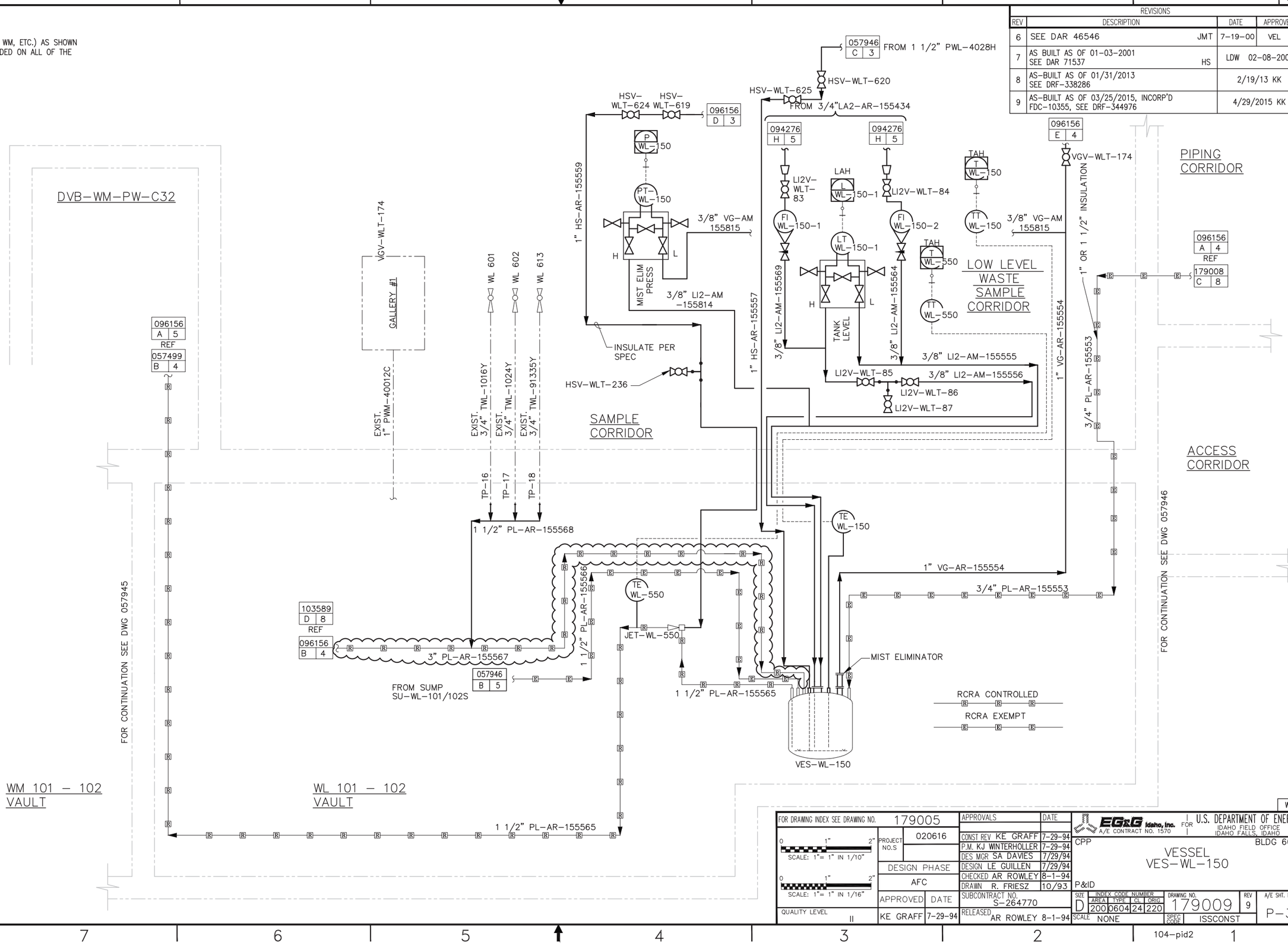

FOR DRAWING INDEX SEE DRAWING NO.	179005	APPROVALS	DATE
SCALE: 1"= 1" IN 1/10"	PROJECT NO.S 020616	CONST REV KE GRAFF	7-29-94
SCALE: 1"= 1" IN 1/16"	DESIGN PHASE AFC	P.M. KJ WINTERHOLLER	7-29-94
QUALITY LEVEL II	APPROVED KE GRAFF DATE 7-29-94	DES MGR SA DAVIES	7/29/94
		DESIGN LE GUILLEN	7/29/94
		CHECKED AR ROWLEY	8-1-94
		DRAWN R. FRIESZ	10/93
		SUBCONTRACT NO. S-264770	
		RELEASED AR ROWLEY	8-1-94

EG&G Idaho, Inc. A/E CONTRACT NO. 1570 | FOR U.S. DEPARTMENT OF ENERGY IDAHO FIELD OFFICE IDAHO FALLS, IDAHO

CPP BLDG 604

VESSEL VES-WL-150

P&ID

SIZE	INDEX CODE NUMBER AREA	TYPE	CL	ORIG	DRAWING NO.	REV	A/E SHT. NO.
D	200	0604	24	220	179009	9	P-3

SCALE NONE SPEC CODE ISSCONST

WL

ID: MXJ
Layout Name: Model
Date: 04/29/15 - 2:47 PM
File: 179009-9.dwg
Path: K:\INTEC Misc\DRF-344976

ADOCS NO.

104-pid2

GENERAL NOTES:

GN1. SEE ARCHITECTURAL DRAWINGS AND SPECIFICATIONS FOR BUILDING ROOFING, SIDING, AND INSULATION.

EARTHWORK NOTES:

E1. EXCAVATION AND BACKFILL SHALL BE PER SPECIFICATION C1, EARTHWORK.

E2. EACH LIFT OF FILL OR BACKFILL SHALL BE COMPACTED TO 95 PERCENT OF ITS MAXIMUM DRY DENSITY DETERMINED IN ACCORDANCE WITH ASTM D1557-78, METHOD B. FILL AND BACKFILL SHALL BE PLACED WITHIN 3 PERCENT OF ITS OPTIMUM MOISTURE CONTENT.

E3. EXISTING MANHOLE COVERS ARE RATED FOR LIGHT DUTY AND SUBCONTRACTOR SHOULD AVOID DRIVING HEAVY CONSTRUCTION VEHICLES OVER MANHOLES.

CONCRETE NOTES:

C1. CAST-IN-PLACE CONCRETE SHALL BE PER SPECIFICATION S2, CONCRETE CONSTRUCTION. COMPRESSIVE STRENGTH SHALL BE 3,000 POUNDS PER SQUARE INCH, UNLESS NOTED OTHERWISE.

GROUT NOTES:

G1. GROUT SHALL BE NONSHRINK, AND SHALL BE A PREMIXED, PROPERLY PREPROPORTIONED, FACTORY PACKAGED, READY TO USE PRODUCT, CONSISTING OF A PATENTED MIXTURE OF CEMENT, SAND, AND INERT MATERIALS.

G2. GROUT SHALL BE EMBECO 636 BY MASTER BUILDERS, OR APPROVED EQUAL. AND SHALL BE FREE OF CHEMICALLY PRODUCED GAS, FREE OF OXIDIZING CATALYSTS, FREE OF INORGANIC ACCELERATORS, AND NONSTAINING. MANUFACTURER'S PRINTED INSTRUCTIONS SHALL ACCOMPANY THE GROUT BAGS.

G3. CONCRETE SURFACES TO BE GROUTED SHALL BE AT LEAST SEVEN DAYS OLD PRIOR TO GROUTING. METAL SURFACES TO BE IN CONTACT WITH GROUT SHALL BE CLEAN AND FREE FROM OIL, GREASE, AND OTHER FOREIGN SUBSTANCES. THE PRESENCE OF TIGHTLY BONDED PAINT IS ACCEPTABLE.

G4. MIXING, PLACING, FINISHING, CURING, AND PROTECTION OF GROUT SHALL BE IN STRICT ACCORDANCE WITH THE MANUFACTURER'S PRINTED INSTRUCTIONS.

G5. PLACING OF GROUT IN DRILLED HOLES FOR INSTALLATION OF ANCHOR BOLTS OR CONCRETE REINFORCEMENT SHALL BE AS FOLLOWS:

FOR A VERTICAL HOLE, FILL THE HOLE WITH GROUT, INSTALL THE BOLT OR REBAR, ROTATE IT 180 DEGREES TO ENSURE REMOVAL OF TRAPPED AIR, AND SECURE AND PLUMB IT WITH THE REQUIRED PROJECTION;

FOR A HORIZONTAL HOLE, THE USE OF A WATERTIGHT PLUG AND PRESSURE GROUTING IS REQUIRED IN ADDITION TO THE ABOVE NOTED REQUIREMENTS.

STEEL NOTES:

S1. ALL STEEL SHALL BE PER SPECIFICATION S1, STRUCTURAL STEEL.

S2. STEEL SHALL BE PAINTED CARBON STEEL (CS), UNLESS NOTED OTHERWISE. CARBON STEEL, INCLUDING EXPOSED SURFACE OF STEEL EMBEDDED IN CONCRETE, SHALL BE PAINTED PER SPECIFICATION PA1, PAINTING.

S3. STAINLESS STEEL REQUIRES NO COATING.

S4. WELDING OF STRUCTURAL MEMBERS AND MISCELLANEOUS METALS SHALL BE PER SPECIFICATION W2, WELDING - STRUCTURAL AND MISCELLANEOUS METALS. ALL WELDS SHALL BE VISUALLY INSPECTED. ALL WELDS ARE TO BE SEALED TO PREVENT ANY CONTAMINATION TRAPS.

S5. LINER PLATE SHALL BE 10 GAUGE STAINLESS STEEL, UNLESS NOTED OTHERWISE. THE LINER SHALL NOT BE WELDED IN PLACE UNTIL THE BUILDING HAS BEEN ENCLOSED AND THE INSIDE AIR TEMPERATURE IN THE CELLS IS BETWEEN 50° AND 80°F.

S6. WELDING OF STAINLESS STEEL LINER SHALL BE PER SPECIFICATION W6, WELDING - STAINLESS STEEL CELL LINER. LINER WELDS TO BE 100% LIQUID PENETRANT TESTED PER SPECIFICATION W6. ALL LINER WELDS ARE TO BE SEALED TO FORM A LEAK TIGHT SURFACE. THE FINISHED WELD CONTOUR SHALL BE DEPOSITED OR GROUND SMOOTH TO ELIMINATE CONTAMINATION TRAPS.

S7. FABRICATION AND ERECTION TOLERANCE FOR HVAC SUPPORTS SHALL BE ± 1½" UNLESS NOTED OTHERWISE. FABRICATION AND ERECTION TOLERANCE FOR PIPE SUPPORT ELEVATIONS SHALL BE ±1/16". ¼" HORIZONTAL TOLERANCE SHALL BE ± 1 ¼" UNLESS NOTED OTHERWISE.

S8. ALL STRUCTURAL BOLTS SHALL BE 3/4 INCH DIAMETER HIGH STRENGTH BOLTS, UNLESS NOTED OTHERWISE.

DESIGN CRITERIA:

D1. SAFETY CLASSIFICATION: SAFETY CLASS III, POTENTIALLY CONTAINING NUCLEAR MATERIALS

D2. LIVE LOADS:

A) FLOORS 200 PSF
B) ROOF 50 PSF

D3. SNOW LOAD: 30 PSF

D4. EARTHQUAKE LOADS:

PER 1985 UBC ZONE 3 (MODIFIED BY ADDITION OF VERTICAL REQUIREMENTS), WITH IMPORTANCE FACTOR I = 1.5 FOR CLASS III NUCLEAR BUILDING, "NON-ESSENTIAL" PER UBC.

A) BUILDING DESIGN LOADS

HORIZONTAL COEFFICIENT = 0.21
VERTICAL COEFFICIENT = 0.14

B) EQUIPMENT DESIGN LOADS

HORIZONTAL DESIGN LOADS = 0.34
VERTICAL DESIGN LOADS = 0.23

D5. WIND LOAD:

PER 1985 UBC FOR BASIC WIND SPEED OF 80 MPH, EXPOSURE C.

D6. LATERAL EARTH PRESSURES:

A) ACTIVE PRESSURE (SHORING): 30 PCF EQUIVALENT FLUID PRESSURE

B) AT-REST PRESSURE (BLDG WALLS): 50 PCF EQUIVALENT FLUID PRESSURE

C) COMPACTION ALLOWANCE: 115 PSF UNIFORM PRESSURE

D) PASSIVE RESISTANCE: 350 PCF EQUIVALENT FLUID PRESSURE

ABBREVIATIONS AND SYMBOLS

AB	ANCHOR BOLT	LG	LONG
A/C	ASPHALTIC CONCRETE	LH	LONG LEG HORIZONTAL
ADDL	ADDITIONAL	LP	LOW POINT
APPROX	APPROXIMATELY	MATL	MATERIAL
BOSP	BOTTOM OF BASE PLATE	MAX	MAXIMUM
BOP	BOTTOM OF PIPE	MIN	MINIMUM
BLDG	BUILDING	MS	MISCELLANEOUS SUPPORT
BM	BEAM	NIC	NOT IN CONTRACT
BOT	BOTTOM	NF	NEAR FACE
CHKD	CHECKERED	NO	NUMBER
CJ	CONSTRUCTION JOINT	NTS	NOT TO SCALE
CL	CENTERLINE	OD	OUTSIDE DIAMETER
CLR	CLEAR	OPNG	OPENING
COL	COLUMN	OPP	OPPOSITE
CONC	CONCRETE	PCF	POUNDS PER CUBIC FOOT
CONN	CONNECTION	PSF	POUNDS PER SQUARE FOOT
CS	CARBON STEEL	PL	PLATE
DET	DETAIL	PLATF	PLATFORM
DF	DRAIN FUNNEL	PLCS	PLACES
DIA	DIAMETER	PROJ	PROJECTION
DISCH	DISCHARGE	RAD	RADIUS
DN	DOWN	REF	REFERENCE
DR	DOOR	REQ'D	REQUIRED
DWG	DRAWING	R	RISER
EA	EACH	RECT	RECTANGULAR
EF	EACH FACE	REINF	REINFORCING
ELECT	ELECTRICAL	SCH	SCHEDULE
EL	ELEVATION (HEIGHT)	SECT	SECTION
ELEV	ELEVATION (VIEW)	SH	SHEET
EMBED	EMBEDMENT	SIM	SIMILAR
EQUIP	EQUIPMENT	SQ	SQUARE
EW	EACH WAY	SS	STAINLESS STEEL
EXIST	EXISTING	STD	STANDARD
FD	FLOOR DRAIN	STIFF	STIFFENER
FDN	FOUNDATION	SU	SUMP
FF	FAR FACE	SUPT	SUPPORT
FIN	FINISH	T	TREAD
FLG	FLANGE	T&B	TOP AND BOTTOM
FLR	FLOOR	THK	THICK
GA	GAGE	TO	TOP OF
GALV	GALVANIZED	TOC	TOP OF CONCRETE
HORIZ	HORIZONTAL	TOG	TOP OF GROUT
HP	HIGH POINT	TOS	TOP OF STEEL
HR	HAND RAIL	TYP	TYPICAL
HS	HIGH STRENGTH	UNO	UNLESS NOTED OTHERWISE
ID	INSIDE DIAMETER	VERT	VERTICAL
IE	INVERT ELEVATION	W/	WITH
INSTR	INSTRUMENT	W/O	WITHOUT
KB	KNEE BRACE	WP	WORK POINT
		ø	DIAMETER

LEGEND

EXTENT OF GRATING
SPAN DIRECTION OF GRATING BEARING BARS
EXTENT OF CHKD PL
HR(R) HANDRAIL(REMOVABLE)
EXTENT OF CONCRETE
OPENING

QUALITY LEVEL III

FOR DRAWING INDEX SEE DRAWING NO. COM

FLUOR
CONTRACT NO. 940304
FOR
U.S. DEPARTMENT OF ENERGY
IDAHO OPERATIONS OFFICE
IDAHO FALLS, IDAHO
CONTRACT DE-AC07-84ID18401

CONTROLLED DOCUMENT CLASS 1

CPP BLDG 1618
LIQUID EFFLUENT TREATMENT & TREATMENT FACILITY

NOTES & ABBREVIATIONS

SIZE	INDEX CODE NUMBER					DRAWING NO.	REV.
	AREA	DWG TYPE	CL	DRWG			
D	200	1618	60	187		347791	2
SCALE	SPEC CODE					WORK REQUEST NO.	A/E SHEET NO.
NONE						87-49	S-1

DISTRIBUTION CODE NO.

NO.	DATE	REVISION DESCRIPTION	DRAWN BY	CHECKED BY	SUPERVISOR	SUPV. ENGR.	APP.	CLIENT	ENGR.	DATE	APP. DATE
			C. BOEROEL	Kim Dunk	C. Boeroel	Kim Dunk			Kim Dunk	7/20/88	
2	9-92	START-UP & TEST AS-BUILT								8-23-88	
1	8/9/11	AS-BUILT								10-25-88	
										11-7-88	
										11-7-88	

3477 91

FORMATD-REV 2.0

REVISIONS			
REV	DESCRIPTION	DATE	APPROVED
44	AS-BUILT AS OF 5/19/05 SEE DAR 123874 R.H.	8-9-05	VKJ
45	AS-BUILT AS OF 11/22/05 SEE DAR 126383	11-29-05	HS
46	AS-BUILT AS OF 5/10/06 SEE DRF 311547	5/15/06	EEE
47	AS-BUILT AS OF 10/08/2013, SEE DRF-340243, COMBINED INDIVIDUAL FILES INTO MAIN FILE, REMOVED REV STATUS BLOCK	10/30/2013	KK
48	AS-BUILT AS OF 8/24/15, INCORP'D FDC-10424 SEE DRF-346387	8/25/2015	KK

EQUIP. LOCATION INDEX

NUMBER	DRAWING	
BLO-WLJ-293	356596	SHEET 11
BLO-WLQ-289	356596	SHEET 2
BLO-WLQ-298	356596	SHEET 1
F-WLR-175	356596	SHEET 1
F-WLR-176	356596	SHEET 1
F-WLR-177	356596	SHEET 2
FRAC-WLL-170	356596	SHEET 5
FRAC-WLK-171	356596	SHEET 8
HE-WLJ-385	356596	SHEET 11
HE-WLJ-386	356596	SHEET 11
HE-WLR-389	356596	SHEET 1
HE-WLJ-390	356596	SHEET 11
HE-WLL-391	356596	SHEET 4
HE-WLK-392	356596	SHEET 7
HE-WLR-394	356596	SHEET 1
HE-WLR-395	356596	SHEET 2
HE-WLL-396	356596	SHEET 4
HE-WLK-397	356596	SHEET 7
HE-WLL-398	356596	SHEET 6
HE-WLK-399	356596	SHEET 9
JET-WLL-531	356596	SHEET 3
JET-WLL-533	356596	SHEET 6
JET-WLK-534	356596	SHEET 9
P-WLL-296-1	356596	SHEET 3
P-WLL-296-2	356596	SHEET 3
SAM-WLJ-695	356596	SHEET 11
SAM-WLJ-696	356596	SHEET 11
SAM-WLJ-697	356596	SHEET 11
SAM-WLJ-698	356596	SHEET 11
SC-WLJ-699	356596	SHEET 11
SU-WLL-169	356596	SHEET 3
SU-WLL-170	356596	SHEET 6
SU-WLK-171	356596	SHEET 9
VES-WLL-195	356596	SHEET 3
VES-WLK-197	356596	SHEET 10
VES-WLL-198	356596	SHEET 4
VES-WLK-199	356596	SHEET 7

REFERENCE DWGS:

356595
356597
356589
446085

RCRA CONTROLLED
RCRA EXEMPT
LET&D POG

THIS DRAWING AFFECTED BY
WO/ECF
SWR
INSTALL DWG NO. 627762
RIPOUT DWG NO. 627762

INDEX CODE NUMBER				
AREA	DWG TYPE	CL	ORIG.	SERIAL
200	1618	24	287	356596

	BY	DATE
DRAWN		
CHECKED		
APPROVED		
APPROVED		
APPROVED		
APPROVED		
ACC APPROVED		

SCALE: NONE
DATE: 5-11-88

IN-PLANT CODE: COM

CPP BLDG. 1618

LIQUID EFFLUENT TREATMENT AND DISPOSAL FACILITY
P & ID

WL

FLUOR
ENGINEERS AND CONSTRUCTORS, INC.
LOS ANGELES, CALIFORNIA
FOR
U.S. ENERGY R&D ADMINISTRATION
IDAHO OPERATIONS OFFICE
IDAHO FALLS, IDAHO

DWG.NO. 356596 SHT.NO. 1 OF 11 REV 48

PROJECT NO. SPEC CODE TBA 161907

ADOCS NO.

File: 356596-48.dwg
Path: K:\INTEC Misc\Bryant\DRF-346387
ID: MXJ
Layout Name: Sheet 1
Date: 08/24/15 - 1:24 PM

FORMAT02-REV 3.0

REVISIONS			
REV	DESCRIPTION	DATE	APPROVED

PDI WLK 199-8 · PI WLK 199-5 · PAH · 094362 I FSL FSH · FAH · FI WLK 199-3 · FT WLK 199-3 · PDT WLK 199-8 · PT WLK 199-5 · PDT-WLK-171-3 (8 5 D) · FI-WLK-199-15 (1 8 B 097379) · LA2V-WLR-98 · LA2V-WLR-97 · LA2V-WLR-96 · AR HG · FE WLK 199-3 · VES-WLK-199 (7 1 B) · 12" POG-HG-152026-lh · SLOPE · FL · TI WLK 199-4 · TT WLK 199-4 · TE WLK 199-4 · HV WLK 199-6 · HAV-WLK-343 (1 4 A 097530) · HS WLK 199-6 · VENT · S · HY WLK 199-6 · ZI WLK 199-6 · ZSO/C WLK 199-6 · TRIP VALVE · 1/2" HA-NN -155078 · HS WLR 395-2 · HY WLR 395-2 · ZI WLR 395-2 · ZSO/C WLR 395-2 · 094362 I TSL TAL · TIC WLR 395-1 · TT WLR 395-1 · TE WLR 395-1 · PI WLR 395-3 · HSV-WLR-446 · HG · NC · TI WLR 395-4 · TV WLR 395-1 · 3" · CTV-WLR-122 FC · 1" CT-NC-152176-ls (1 4 B 356597) · HE-WLR-395 · 1" HS-NC-152175-lh · 1/2" · 1/2" HA-NN -155069 · T/P · TY WLR-395 1A · TY WLR-395 1B · 1 8 B 097530 · 12" POG-HG-152047-lh · 12" POG-HG-152306-lh · 4" VG-HG-152305-lh (1 8 C) · 12" POG-HG-152173-lh · 3" · PSE-WLR-177-2 (ET) · PSE-WLR-177-1 (ET) · 8" POG-AR-152349 (7 1 B) · 8"x6" · FI-WLR-177-9 (1 6 A 097530) · 094362 PDSHH I · PDAL · PDI WLR 177-2 · PDAH · PDT WLR 177-2 · FI-WLR-177-8 (1 5 A 097530) · PDI WLR 177-1 · PDT WLR 177-1 · PDSHH · CTV-WLQ-123 · 1/2" · 094362 I · SU-WLL-169 (3 1 B) · 1" CT-AR-152051 · CTV-WLQ-141 · F -WLR- 177 · POGV-WLR-1 · POGV-WLR-2 · POGV-WLR-3 · DOP PORT · SAMPLE PORT · 1/2" · NC · CTV-WLR-85 · CTV-WLR-86 · CTV-WLR-87 · CTV-WLR-88 · CTV-WLR-89 · 3/4" CT-AR-152236 · 3/4" CT-AR-152237 · 3/4" CT-AR-152238 · 3/4" CT-AR-152239 · 1" CT-AR-152030 · 1" CT-AR-152030 · 1 5 A 097530 · FI-WLR-177-10 · TE WLR 177-4 · TT WLR 177-4 · TI WLR 177-4 · TAL · 094362 I TSL · 1" CT-AR-152051 · SLOPE · CTV-WLR-81 · 12" POG-HG-152028-lh · TE WLR 177-5 · TT WLR 177-5 · TI WLR 177-5 · 094362 I TSL · 1 8 A

1 4 A 097530 · 1/2" HA-NN -155077 · HS WLR 395-6 · VENT · HY WLR-395 6C · ZI WLR 395-6 · ZSO/C WLR 395-6 · TRIP VALVE · FI-WLL-198-15 (1 4 B 097379) · PDI WLL 198-8 · PI WLL 198-5 · PAH · PDT WLL 198-8 · PT WLL 198-5 · PDT-WLL-170-3 (5 5 D) · FI-WLL-198-16 (1 8 A 097530) · 094363 I FSL FSH · FAH · FI WLL 198-3 · FT WLL 198-3 · FI-WLL-198-17 (1 7 A 097530) · LA2V-WLR-113 · LA2V-WLR-112 · LA2V-WLR-111 · AR HG · FE WLL 198-3 · TE WLL 198-4 · TT WLL 198-4 · TI WLL 198-4 · 1 5 B 097530 · 1/2" HA-NN -155074 · HS WLL 198-6 · VENT · HY WLL 198-6 · ZI WLL 198-6 · ZSO/C WLL 198-6 · TRIP VALVE · 094363 I · 12" POG-HG-152047-lh (1 8 C) · HV WLR 395-6 · HV WLL 198-6 · FL · 12" POG-HG-152306-lh (1 8 C) · 12" POG-HG-152029-lh (1 8 B) · 094362 I TSL · TI WLQ 289-4 · TAL · TT WLQ 289-4 · TE WLQ 289-4 · 1 4 D 097530 · 1/2" HA-NN -155044 · T/P · PIC-WLK-171-3 (8 5 D) · PDY WLK 171-3 · PDV WLK 171-3 · 094362 I · KQI WLQ 289 · HS WLQ 289-2 · IAH IAL · II WLQ 289-1 · IT WLQ 289-1 · 12" POG-HG-152029-lh · TAH · TI WLQ 289-9 · TT WLQ 289-9 · TE WLQ 289-9 · 1/2" HA-NN-152152 · 1/4" · LA2V-WLQ-220 · 1 6 D 097530 · PCV WLQ 289-1 · 10" · FO · 12" POG-HG-152028-lh · 3/8" · 1" · PWLV-WLQ-289 · BLO-WLQ-289 · STAINLESS TUBE TO SUMP

SIZE	INDEX CODE NUMBER				DRAWING NO.	REV
	AREA	TYPE	CI	SEQ		
D	200	1618	24	287	356596	48
SCALE NONE					SHEET 2	

SPEC CODE · 1 TBA 161907

ADOCS NO.

ID: MXJ

Date: 08/24/15 - 1:24 PM Layout Name: Sheet 2

File: 356596-48.dwg
Path: K:\INTEC Misc\Bryant\DRF 346387

SIZE	INDEX CODE NUMBER AREA	TYPE	CL	ORIG	DRAWING NO.	REV
D	200	1618	24	287	356596	48
SCALE NONE					SHEET 3	

REVISIONS: REV | DESCRIPTION | DATE | APPROVED

FORMATD2-REV 3.0

File: 356596-48.dwg Path: K:\INTEC Misc\Bryant\DRF 346387 Date: 08/24/15 - 1:24 PM Layout Name: Sheet 3 ID: MXJ

ADOCS NO.

SPEC CODE 1 TBA 161907

FORMAT02-REV 3.0

REVISIONS			
REV	DESCRIPTION	DATE	APPROVED

356597

094363 I

HAV-WLL-320 1 8 C 097530

HAV-WLL-427 1 3 D 097530

HAV-WO-428 1 3 C 097530

HAV-WLL-426 1 3 D 097530

HAV-WLL-429 1 3 C 097530

DY-WLL-170-2 5 7 D

1 4 D 097379

1 2 C 097379

2 4 D

2 5 D

10 2 C

10 4 B

1 6 D

2 3 D

1 4 C 097379

1 4 B 097379

1 3 B 097379

1 3 C 097379

TY WLL-391 1B

TY WLL-391 1A

VENT

FO

TIC WLL 391-1

TT WLL 391-1

TV WLL 391-1

TW WLL 391-3

3"

NC AR

TWV-WLQ-84

lc NONE

WRV-WLQ-12

LA2V-WLQ-129

DY WLL-170 2B

DY WLL-170 2C

1/2" HA-NN-155092

F-WLQ-182

HAV-WLQ-193

HAV-WLQ-194

HS WLL 396-5

ZI WLL 396-5

HY WLL 396-5

ZSO/C WLL 396-5

HV WLL 396-5

LSV-WLR-142

NONE lh

NC AR

AR HG

DCV-WLR-314

lh NONE

1" DC-AR-152141

1" DC-AR-152141 DECON SOLUTION

1" LS-NC-152142-lh

HS WO 295-6

ZI WO 295-6

HY WO 295-6

ZSO/C WO 295-6

HV WO 295-6

FC

1/2" DW-AR-152076

DWV-WLR-4

FY WLL-396 1B

FY WLL-396 1A

FIC WLL 396-1

SP

FT WLL 396-1

FE WLL 396-1

WRV-WLR-4

WRV-WLR-3

4" WR-NC-152144-lc

4" TW-NC-152143-lc

TWV-WLR -85

WRV-WLR -13

FY-WLL-170-27

FFIC WLL 396-2

TI WLL 396-6

TAH

TT WLL 396-6

TE WLL 396-6

FT WLL 396-2

TWV-WLQ -191

TWV-WLQ-192

TI WLL 198-2

XMS AR

LA2V-WLQ-109

LAH LSHH LAHH

LI WLL 198-1

LT WLL 198-1

FI-WLL-198-11

FI-WLL-198-12

HY WLL 198-7

HS WLL 198-7

ZI WLL 198-7

ZSO/C WLL 198-7

HV WLL 198-7

1" DC-AR-152146

1" LS-NC-152147-lh

FI-WLL-198-13

FI-WLL-198-14

PDI WLK 198-9

PDAH

PDT WLL 198-9

LSV-WLR-144

DCV-WLR -310

LA2V-WLQ -110

1" DC-AR-152146-lh

LA2V-WLQ-175

LA2V-WLQ-176

SRG-WLL-391-2

SURGE DAMPENER

PSV-WLL -391-2

1" TW-AR-152137

1" WR-AR-152136

4" DC-AR-152192

1" WR-AR-152138

TO SAMPLERS

11 2 A

1/4" PSL-HG-152058

1/2" LA2-AR-152195(T)

1/2" LA2-AR-152211(T)

1" DC-HG-152141

1/2" LA2-AR-152165(T)

1/2" LA2-AR-152276(T)

1/2" LA2-AR-152288(T)

1/2" LA2-AR-152289(T)

1/2" LA2-AR-152148(T)

1/2" LA2-AR-152149(T)

1" DC-HG-152146

CELL # 2

SET @ 150 PSIG

PSE WLL 396-4

4" WR-AR-152144

4" TW-AR-152143

14" POG-HG-152043

SLOPE

10" CT-HG-152044

HE-WLL-396

R

12" POG-HG-152047

REMOVABLE DEMISTER

VES-WLL-198

1 1/2" CT-HG-152045

1 1/2" CT-HG-152045 NO

CTV-WLL-77

CTV-WLL-127

1/2" DW-HG-152076

1" WR-AR-152204

1/2" CT-AR-152248

1/4" PSL-HG-152046

TO SAMPLERS

8" POG-AR-152201

OTA VENT FROM PSV-WLR-176-7

1" PL-HG-152056

SLOPE

1" PL-HG-152057

1" TW-AR-152137

HE-WLL-391

R

TE WLL 391-1

FC

DV WLL 170-2

AR HG AR

1" WR-AR-152138

4" DC-AR-152192

FE WLL 396-2

TE WLL 198-2

5 2 C

5 3 A

7 6 A

3 8 A

11 2 D

1 8 B

2 8 C

SIZE	INDEX CODE NUMBER				DRAWING NO.	REV
	AREA	TYPE	CL	ORIG		
D	200	1618	24	287	356596	48
SCALE NONE					SHEET 4	

ADOCS NO.

SPACE CODE 1 TBA 161907

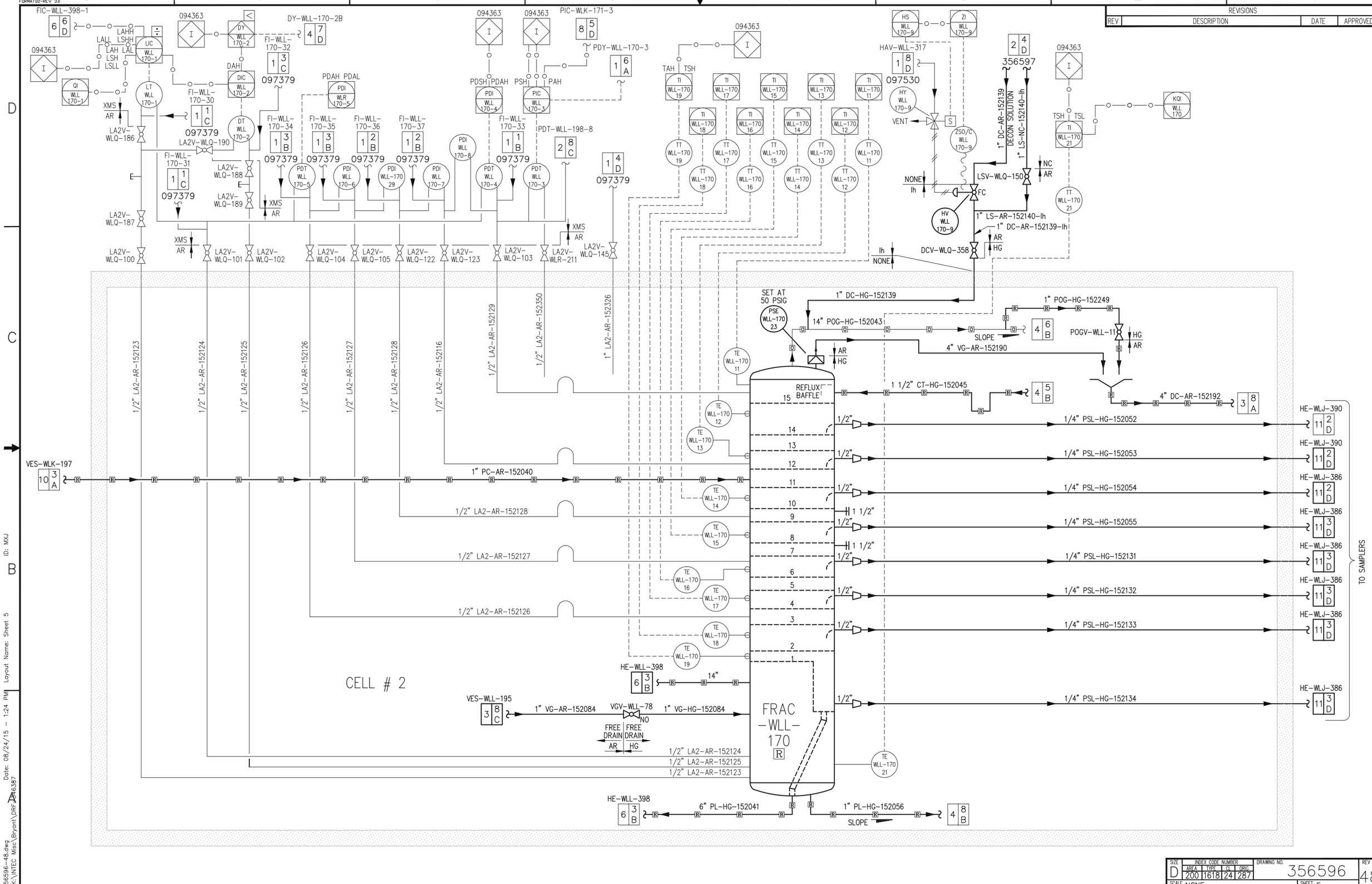

REVISIONS			
REV	DESCRIPTION	DATE	APPROVED

SIZE	INDEX CODE NUMBER				DRAWING NO.	REV
D	AREA	TYPE	CL	ORIG	356596	48
	200	1618	24	287		
SCALE NONE					SHEET 5	

SPEC CODE 1 TBA 161907

ADOCS NO.

File: 356596-48.dwg Path: K:\INTEC Misc\Bryant\DRF_046387 Date: 08/24/15 - 1:24 PM Layout Name: Sheet 5 ID: MXJ

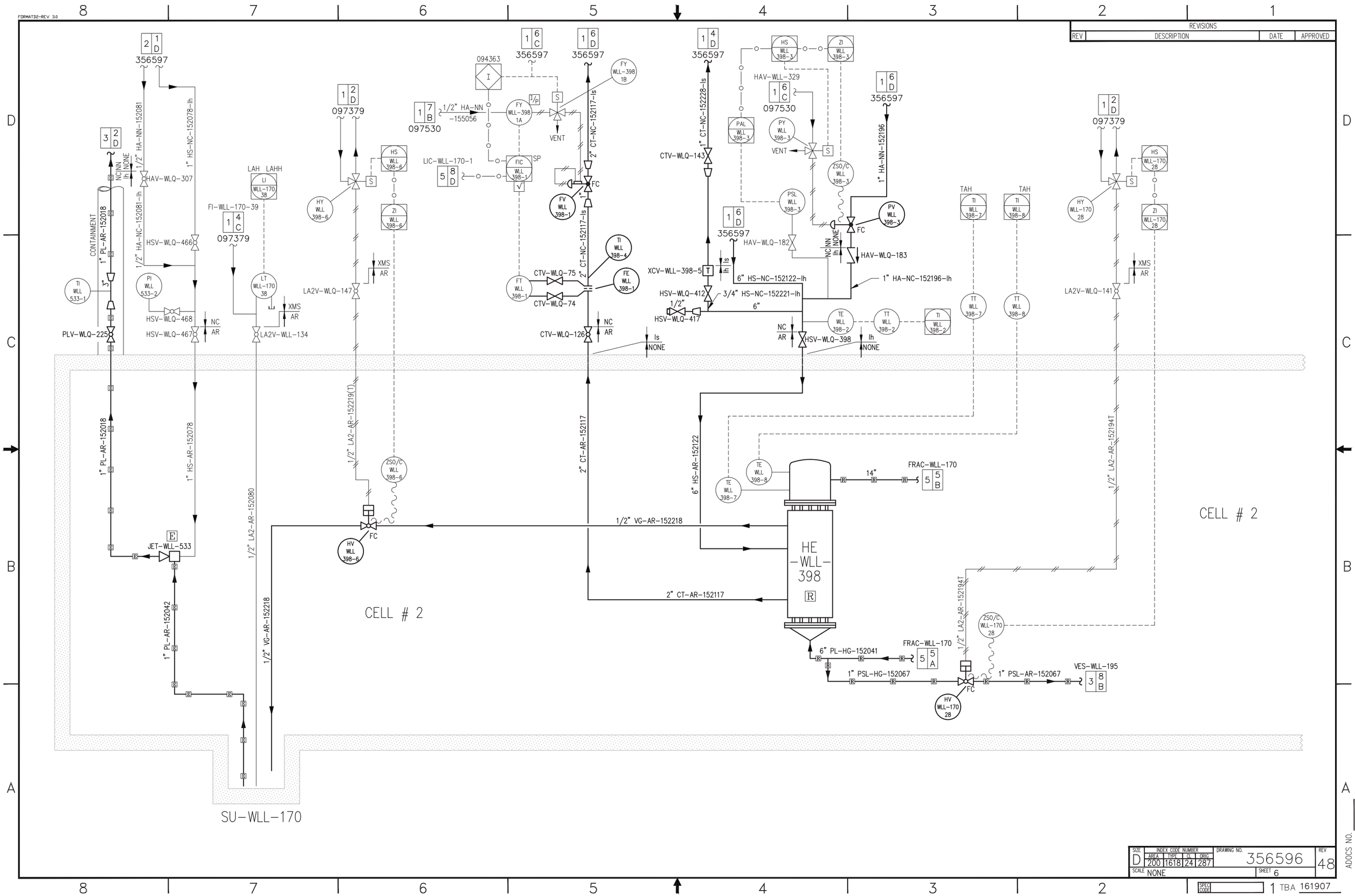

FORMATD2-REV 3.0
REVISIONS
REV
DESCRIPTION
DATE
APPROVED
356597
097379
097530
094363
1/2" HA-NN-152081
1" HS-NC-152078-lh
HAV-WLL-307
HSV-WLQ-466
1/2" HA-NC-152081-lh
CONTAINMENT
1" PL-AR-152018
TI WLL 533-1
PI WLL 533-2
HSV-WLQ-468
HSV-WLQ-467
PLV-WLQ-225
NC
AR
LAH LAHH
LI WLL-170 38
FI-WLL-170-39
LT WLL-170 38
LA2V-WLL-134
XMS
AR
HY WLL 398-6
HS WLL 398-6
ZI WLL 398-6
LA2V-WLQ-147
1/2" LA2-AR-152219(T)
ZSO/C WLL 398-6
HV WLL 398-6
FC
1" PL-AR-152018
1" HS-AR-152078
1/2" LA2-AR-152080
1/2" VG-AR-152218
JET-WLL-533
1" PL-AR-152042
SU-WLL-170
CELL # 2
1/2" HA-NN -155056
LIC-WLL-170-1
FY WLL-398 1A
FY WLL-398 1B
FIC WLL 398-1
SP
VENT
FV WLL 398-1
FT WLL 398-1
CTV-WLQ-75
CTV-WLQ-74
CTV-WLQ-126
2" CT-NC-152117-ls
2" CT-AR-152117
TI WLL 398-4
FE WLL 398-1
1" CT-NC-152228-ls
CTV-WLQ-143
XCV-WLL-398-5
HSV-WLQ-412
HSV-WLQ-417
1/2"
6" HS-NC-152122-lh
3/4" HS-NC-152221-lh
6"
HSV-WLQ-398
Is NONE
Ih NONE
HAV-WLL-329
PAL WLL 398-3
PY WLL 398-3
ZSO/C WLL 398-3
PSL WLL 398-3
PV WLL 398-3
HAV-WLQ-182
HAV-WLQ-183
1" HA-NN-152196
1" HA-NC-152196-lh
TE WLL 398-2
TT WLL 398-2
TI WLL 398-2
TAH
TI WLL 398-7
TI WLL 398-8
TT WLL 398-7
TT WLL 398-8
HS WLL-170 28
HY WLL-170 28
ZI WLL-170 28
LA2V-WLQ-141
1/2" LA2-AR-152194T
6" HS-AR-152122
TE WLL 398-7
TE WLL 398-8
14"
FRAC-WLL-170
HE -WLL- 398
2" CT-AR-152117
6" PL-HG-152041
1" PSL-HG-152067
1" PSL-AR-152067
VES-WLL-195
ZSO/C WLL-170 28
HV WLL-170 28
SIZE D
INDEX CODE NUMBER
AREA 200 TYPE 1618 CL 24 ORIG 287
DRAWING NO. 356596
REV 48
SCALE NONE
SHEET 6
SPEC CODE
1 TBA 161907
ADOCS NO.

FORMAT02-REV 3.0

REVISIONS			
REV	DESCRIPTION	DATE	APPROVED

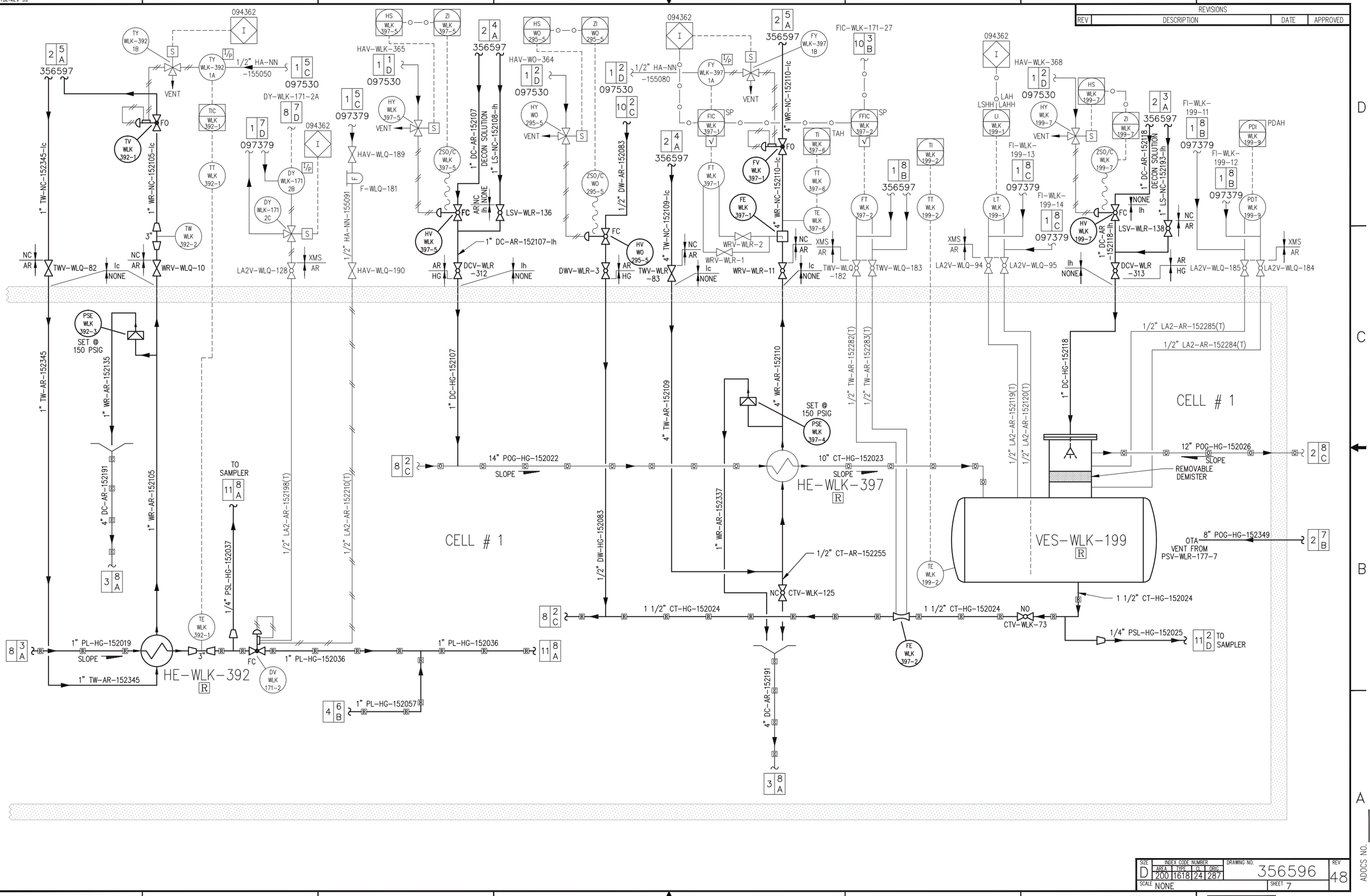

SIZE	INDEX CODE NUMBER				DRAWING NO.	REV
	AREA	TYPE	CL	ORIG		
D	200	1618	24	287	356596	48
SCALE NONE					SHEET 7	

ADOCS NO. 161907

SPACE CODE 1 TBA

FORMAT02-REV 3.0

REVISIONS			
REV	DESCRIPTION	DATE	APPROVED

FIC-WLK-399-1 (9 6 D)
094362
LAHH LALL LSHH LAH LAL LSH LSLL
LIC WLK 171-1
DY-WLK-171-2B (7 7 D)
DY WLK 171-2A
FI-WLK-171-33 (1 6 C) 097379
DAH
DIC WLK 171-2
PDAH PDAL
PDI WLK 171-5
QI WLK 171-1
LT WLK 171-1
XMS AR
LA2V-WLQ-178
FI-WLK-171-31 (1 6 C) 097379
DT WLK 171-2
LA2V-WLQ-180
FI-WLK-171-35 (1 6 B) 097379
FI-WLK-171-36 (1 7 B) 097379
FI-WLK-171-37 (1 6 B) 097379
FI-WLK-171-38 (1 6 B) 097379
PDI WLK 171-8
FI-WLK-171-32 (1 6 C) 097379
LA2V-WLQ-179
LA2V-WLQ-181
PDT WLK 171-5
PDI WLK 171-6
PDI WLK 171-30
PDI WLK 171-7
PDT WLK 171-4
PDT WLK 171-3
LA2V-WLQ-177
LA2V-WLQ-85
LA2V-WLQ-86
LA2V-WLQ-87
LA2V-WLQ-89
LA2V-WLQ-90
LA2V-WLQ-91
LA2V-WLQ-120
LA2V-WLQ-88
LA2V-WLR-212
LA2V-WLQ-132
1/2" LA2-AR-152090
1/2" LA2-AR-152091
1/2" LA2-AR-152092
1/2" LA2-AR-152093
1/2" LA2-AR-152094
1/2" LA2-AR-152095
1/2" LA2-AR-152096
1/2" LA2-AR-152097
1/2" LA2-AR-152351
1" LA2-AR-152348
094362
PIC-WLL-170-3 (5 5 D)
PDY-WLK-171-3 (2 5 A)
PDSH PDAH PSH PAH
PDI WLK 171-4
PIC WLK 171-3
FI-WLK-171-34 (1 5 B) 097379
PDT-WLK-199-8 (2 8 D)
1 8 D 097379
TAH TSH
TI WLK-171 19 / 18 / 17 / 16 / 15 / 14 / 13 / 12 / 11
TT WLK-171 19 / 18 / 17 / 16 / 15 / 14 / 13 / 12 / 11
HS WLK 171-9
ZI WLK 171-9
HAV-WLK-367 (1 1 D)
097530
HY WLK 171-9
VENT
ZSO/C WLK 171-9
2 4 A 356597
1" DC-AR-152031 DECON SOLUTION
1" LS-NC-152333-lh
NC AR
LSV-WLR-134
FC
lh NONE
HV WLK 171-9
1" LS-AR-152333-lh
DCV-WLR-311
AR HG
1" DC-AR-152031-lh
094362
TSH TSL
TI WLK-171 21
TT WLK-171 21
KQI WLK 171
SET AT 50 PSIG
PSE WLK-171 23
1" DC-HG-152031
14" POG-HG-152022
1" POG-HG-152256
SLOPE
7 6 B POGV-WLK-12
HG AR
4" VG-AR-152099
TE WLK-171 11
REFLUX BAFFLE
15
1 1/2" CT-HG-152024
7 5 B
4" DC-AR-152191
3 8 A
14
13
12
11
10
9
8
7
6
5
4
3
2
1
1/2"
1/4" PSL-HG-132032
1/4" PSL-HG-152033
1/4" PSL-HG-152034
1 1/2"
1/4" PSL-HG-152035
1/4" PSL-HG-152100
1/4" PSL-HG-152101
1/4" PSL-HG-152102
1/4" PSL-HG-152103
HE-WLJ-390 (11 2 D)
HE-WLJ-390 (11 2 D)
HE-WLJ-386 (11 2 D)
HE-WLJ-386 (11 1 D)
HE-WLJ-386 (11 1 D)
HE-WLJ-386 (11 1 D)
HE-WLJ-386 (11 1 D)
HE-WLJ-386 (11 1 D)
TO SAMPLERS
TE WLK-171 12 / 13 / 14 / 15 / 16 / 17 / 18 / 19 / 21
VES-WLK-197 (10 1 B)
1" PC-AR-152013
1/2" LA2-AR-152095
1/2" LA2-AR-152094
1/2" LA2-AR-152093
1/2" LA2-AR-152091
1/2" LA2-AR-152092
1/2" LA2-AR-152090
CELL # 1
HE-WLK-399 (9 3 A) 14"
VES-WLL-195 (11 8 4)
1" VG-AR-152098
VGV-WLK-79 NO
1" VG-HG-152098
FREE DRAIN AR
FREE DRAIN HG
FRAC -WLK- 171 R
HE-WLK-399 (9 3 B)
6" PL-HG-152017
1" PL-HG-152019
SLOPE
7 8 B

SIZE	INDEX CODE NUMBER				DRAWING NO.	REV
	AREA	TYPE	CL	ORIG		
D	200	1618	24	287	356596	48
SCALE NONE					SHEET 8	

SPEC CODE 1 TBA 161907

ADOCS NO.

File: 356596-48.dwg
Path: K:\INTEC Miss\Bryant\DRF
Date: 08/24/15 - 1:24 PM
Layout Name: Sheet 8
ID: MXJ

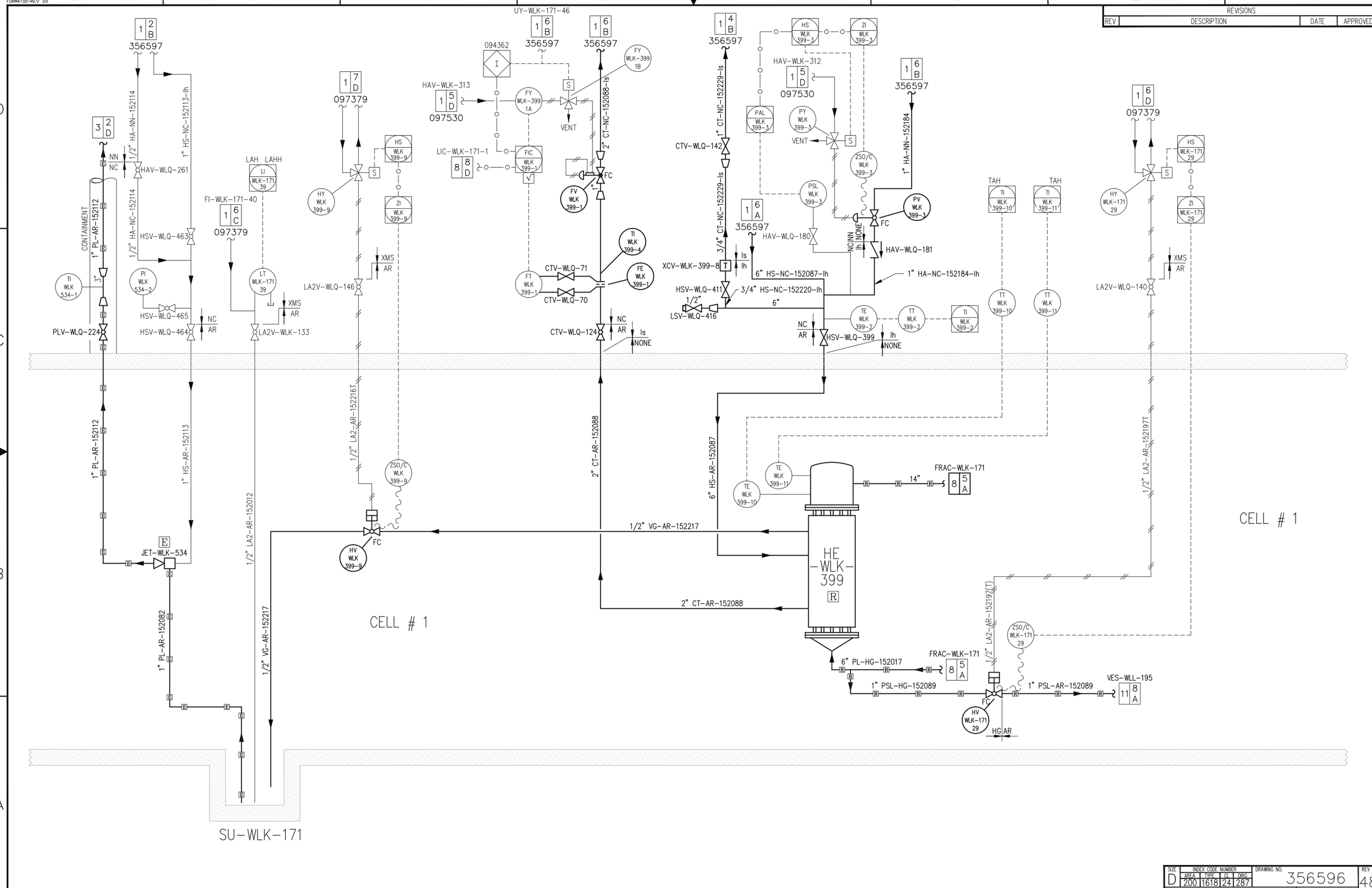

REVISIONS			
REV	DESCRIPTION	DATE	APPROVED

SIZE	INDEX CODE NUMBER				DRAWING NO.	REV
D	AREA	TYPE	CL	ORIG	356596	48
	200	1618	24	287		
SCALE NONE					SHEET 9	

SPEC CODE 1 TBA 161907

ADOCS NO.

File: 356596-48.dwg Path: K:\INTEC Misc\Bryant\DRF_346387 Date: 08/24/15 - 1:24 PM Layout Name: Sheet 9 ID: MXJ

FORMAT(2-REV 3.0

REVISIONS			
REV	DESCRIPTION	DATE	APPROVED

CPP-1618

2 1 B
156389

1/2" DW-AR-156410

DWV-WO-51

DWV-WO-50

1 3 D
156389

OPEN END

1" DW-AR-152076(ET)

PVC SLEEVE

SEAL SLEEVE

CPP-604
ELECTRICAL
SWITCHGEAR ROOM

DWV-WLB-18

1" DW-AR-152076

1 1 G
103304

LY WLK 197-2A

T/P

S

VENT

LY WLK 197-2B

CPP-605

LV WLK 197-2

FROM COND. TANKS 4 3 E
094276

FC

1" DW-AR-152076

TO FUTURE VOG TIE-IN

VGV-WL-56

1/2" DW-AR-156782

DWV-WLB-110

1 3 H
103304

1/2" PC-AR-152279

NW

AR

NC PSV-WL-18

FI-WL-197

NC PSV-WL-14

DWV-WLB-109

1" VG-AR-152021

FUTURE VOG TIE-INS

VGV-WLQ-57

VGV-WLQ-58

VGV-WLQ-59

1/2" DW-AR-152076

4 5 D

1/2" DW-AR-152083

7 5 D

LSHH

LI WLK 197-2

LSL

LSH,LSHH

I
095936

LAH, LAHH
LAL

FI-WLK-197-3

1 7 C
097379

FI-WLK-197-4

1 7 B
097379

LT WLK 197-2

FROM

LA2V-WLQ-84

LA2V-WLQ-92

1 1/2" PC-AR-152011

1 1/2" PC-AR-152011

1/2" LA2-AR-152206(T)

1/2" LA2-AR-152207(T)

CONTAINMENT

TO WL-101 2 8 B
094276

PLV-WLP-229

1" PL-AR-152062-ls

PLV-WL-227

FC

CONTAINMENT

1" PL-AR-152062-ls

PLV-WL-226

CONTAINMENT

3 3 D FROM WLL-195

1" PL-AR-152062

HS WLL 296-3

ZI WLL 296-3

1 2 G
103304

HY WLL 296-3

VENT

S

ZSO/C WLL 296-3

HV WLL 296-3

FC

ME WLL-296 11

HS WLL 296-4

ZI WLL 296-4

LEAK DETECTOR

XA WLL-296 11B

XA WLL-296 11A

PLV-WL-228 NC

NC PLV-WL-52

1/2" PL-AR-152278

MA WLL-296 11A

MS WLL-296 11A

1 1 G
103304

HY WLL 296-4

VENT

S

ZSO/C WLL 296-4

HV WLL 296-4

FC

CONTAINMENT

1" PL-AR-152072-ls

MA WLL-296 11

CONTAINMENT

1" PL-AR-152039
(ACID RECYCLE)

3 1 B

1 8 A
176274

DRAIN BOTTLE

DRAIN BOTTLE

TO WL-133 4 5 F
094276

PLV-WL-49

CPP-604

VES-WLK-197
R

11 8 A

1" VG-AR-152205

1 1/2" PC-AR-152013

1" PC-AR-152013

FRAC-WLK-171

8 8 B

CELL # 1

1" PC-AR-152013

1" PC-AR-152040

356597 A 8

1/4 TUBING

FFIC-WLL-396-2

4 3 D

1 7 B
356597

FDALH

FIC WLL 170-27

FT WLL 170-27

PCV-WLQ-44

PCV-WLQ-33

FE WLL 170-27

PCV-WLQ-45

FV WLL 170-27

XMS

AR

VENT

T/P

FY WLL-170 27A

S

FY WLL-170 27B

FC

I
094363

1 7 D
097530
HAV-WLL-315

356597 A 8

1/4 TUBING

FFIC-WLK-397-2

7 3 D

1 8 B
356597

FDALH

FIC WLK 171-27

FT WLK 171-27

PCV-WLQ-46

PCV-WLQ-32

FE WLK 171-27

PCV-WLQ-47

FV WLK 171-27

XMS

AR

VENT

T/P

FY WLK-171 27A

S

FY WLK-171 27B

FC

I
094363

1 6 D
097530
HAV-WLK-314

PCV-WLQ-43

1" PC-AR-152040

PCV-WLQ-42

5 8 B TO FRAC-WLL-170

SIZE	INDEX CODE NUMBER				DRAWING NO.	REV
	AREA	TYPE	CI	ORIG		
D	200	1618	24	287	356596	48
SCALE NONE					SHEET 10	

SPEC CODE

1 TBA 161907

ADOCS NO.

ID: MXJ
Layout Name: Sheet 10
Date: 08/24/15 - 1:24 PM
File: 356596-48.dwg
Path: K:\INTEC Misc\Bryant\DRFTG\346387

FORMAT(2-REV 3.0

REVISIONS			
REV	DESCRIPTION	DATE	APPROVED

356597 | 356597 | FAH WLJ 695-3 | 356597 | 356597 | 356597

1 1/2" CW-NN-152240-Ic
SSW-WLR-99
EFN-WLR-99
TO DRAIN
1/2" HS-NC-152060-Ih
HSV-WLJ-410
TW-WLJ-99
HAV-WLJ-210
UTILITY STATION
1/2" TW-NC-152073-Ic
1/2" HA-NN-152152
HAV-WLJ-169
SET @ 150 PSIG
PSE WLJ 390-4
SET @ 60 PSIG
PCV WLJ 695-1
1" TW-NC-152145
3/4" TW-NC-152161-Ic
TWV-WLJ-86
NONE Ic
1/2" HA-NN-152152
HAV-WLJ-170
PI WLJ 695-2
HAV-WLJ-171
FSH WLJ 695-3
4" DC-AR-152331
3 8 A
3/4" TW-NC-152161-Ic
1/2" HA-NN-152340
EF-WLJ-695-3
1 4 C
356598
HS WLJ 293-1
HVAC DUCTING
SC WLJ 293-1
HVAC DUCTING
BLO-WLJ-293
PACKAGED SYSTEM
3/4" WR-NC-152162-Ic
WRV-WLJ-5
FI WLJ 390-5
3/4" WR-NC-152162-Ic
NONE Is
3/4" WR-NC-152161-Ic
TW WLJ 390-3
1/2" PSL-AR-152111-Is
HE-WLJ-390
3/4" WR-NC-152257-Ic
WRV-WLJ-16
FI WLJ 386-1
3/4" WR-NC-152257-Ic
NONE Is
TW WLJ 386-2
1/2" PSL-AR-152287-Is
HE-WLJ-386
3/4" TW-NC-152161Ic
3/4" WR-NC-152290-Ic
WRV-WLJ-15
FI WLJ 385-1
3/4" WR-NC-152290-Ic
NONE Is
TW WLJ 385-2
1/2" PSL-AR-152286-Is
HE-WLJ-385
1/4" PSL-AR-152277
1/4" PSL-AR-152275
1/4" PSL-AR-152160
1/2" PSL-AR-152153
HAV-WLJ-172
DCV-WLJ-276
1/2" PSL-AR-152154
HAV-WLJ-174
DCV-WLJ-277
1/2" PSL-AR-152155
HAV-WLJ-176
DCV-WLJ-278
1/2" PSL-AR-152341
HAV-WLJ-178
DCV-WLJ-279
NN AR
1/4" PSL-AR-152160
1/2" PSL-AR-152038
PSLV-WLJ-34
1/4" PSL-AR-152037
1/2" PSL-AR-152156
1/2" PSL-AR-152059
PSLV-WLJ-35
1/4" PSL-AR-152277
1" PSL-AR-152156
PSLV-WLJ-36
1/2" PSL-AR-152157
PSLV-WLJ-37
1/4" PSL-AR-152275
1/2" PSL-AR-152159
PSLV-WLJ-38
1/4" PSL-AR-152160
1/2" PSL-AR-152312
HAV-WLJ-312
SAM-WLJ-695
1/2" PSL-AR-152311
HAV-WLJ-311
SAM-WLJ-697
1/2" PSL-AR-152313
HAV-WLJ-313
SAM-WLJ-698
1/2" PSL-AR-152310
HAV-WLJ-310
SAM-WLJ-696
SAMPLE BOTTLE (TYP)
SC-WLJ-699
PSLV-WLJ-59
PSLV-WLJ-54
PSLV-WLJ-50
1/8"
PSLV-WLJ-53
PSLV-WLJ-49
1/8"
PSLV-WLJ-55
PSLV-WLJ-51
1/8"
PSLV-WLJ-52
PSLV-WLJ-48
1/8"
SC-WLJ-698
PSLV-WLJ-58
TI WLJ 695-4
TI WLJ 697-1
TI WLJ 698-1
TI WLJ 696-1
DRAIN
PSLV-WLJ-15 LOW POINT DRAIN
PSLV-WLJ-46 LOW POINT DRAIN
PSLV-WLJ-47 LOW POINT DRAIN
1/2"PSL-AR-155606
FROM HE-WLK-399
10 1 C
9 2 A
8 6 A
7 7 B
7 5 B
FROM FRAC-WLK-171
1" VG-AR-152205
VGV-WLJ-46
1" PSL-AR-152089-Is
PSLV-WLJ-21
PSLV-WLJ-60
1" VG-AR-152098-Is
VGV-WLJ-95
AR HG
Is NONE
1/4" PSL-AR-152037 (SAMPLE LINE)
PSLV-WLJ-31
PSLV-WLJ-39
PSLV-WLJ-40
1" PL-HG-152036
NONE Is
NONE Is
PSLV-WLJ-41
1" VG-AR-152205
VGV-WLJ-45
1" PSL-AR-152089-Is
PSLV-WLJ-43
1" VG-AR-152098-Is
NO
VGV-WLJ-44
(SAMPLE LINE) 1/4" PSL-AR-152058
PSLV-WLJ-42
(SAMPLE LINE) 1/4" PSL-AR-152158
PSLV-WLJ-44
1" PL-HG-152036
Is NONE
HG AR
3 8 B
TO VES WLL-195
3 8 C
4 7 B
3 8 B
TO VES WLL-195
3 8 B
SAMPLE ROOM
CELL # 1
CELL # 2
ACCESSIBLE FM SAMPLE COOLER (TYP)
5 1 A
5 1 B
5 1 B
5 1 B
5 1 B
5 1 B
5 1 B
5 1 C
4 1 B
7 1 B
8 1 C
8 1 B
8 1 B
8 1 B
8 1 B
8 1 B
8 1 B
8 1 B
8 1 A
1/4" PSL-HG-152134-Is (BOTTOM) PSLV-WLJ-16
1/4" PSL-HG-152133-Is (TRAY 2) PSLV-WLJ-30
1/4" PSL-HG-152132-Is (TRAY 4) PSLV-WLJ-29
1/4" PSL-HG-152131-Is (TRAY 6) PSLV-WLJ-28
1/4" PSL-HG-152055-Is (TRAY 8) PSLV-WLJ-12
1/4" PSL-HG-152054-Is (TRAY 10) PSLV-WLJ-11
1/4" PSL-HG-152053-Is (TRAY 12) PSLV-WLJ-10
1/4" PSL-HG-152052-Is (TRAY 14) PSLV-WLJ-9
1/4" PSL-HG-152046-Is NC PSLV-WLJ-14
1/4" PSL-HG-152025-Is NC PSLV-WLJ-8
1/4" PSL-HG-152032-Is (TRAY 14) PSLV-WLJ-3
1/4" PSL-HG-152033-Is (TRAY 12) PSLV-WLJ-4
1/4" PSL-HG-152034-Is (TRAY 10) PSLV-WLJ-5
1/4" PSL-HG-152035-Is (TRAY 8) PSLV-WLJ-6
1/4" PSL-HG-152100-Is (TRAY 6) PSLV-WLJ-24
1/4" PSL-HG-152101-Is (TRAY 4) PSLV-WLJ-25
1/4" PSL-HG-152102-Is (TRAY 2) PSLV-WLJ-26
1/4" PSL-HG-152103-Is (BOTTOM) PSLV-WLJ-27
HG AR
1/2" PSL-AR-152111-Is
1/2" PSL-AR-152287-Is
1/2" PSL-AR-152286-Is

SIZE	INDEX CODE NUMBER				DRAWING NO.	REV
	AREA	TYPE	CL	ORIG		
D	200	1618	24	287	356596	48
SCALE NONE					SHEET 11	

SPEC CODE 1 TBA 161907

ADOCS NO.

File: 356596-48.dwg
Path: K:\INTEC Misc\Bryant\DRF-346387
Date: 08/24/15 - 1:24 PM Layout Name: Sheet 11
ID: MXJ

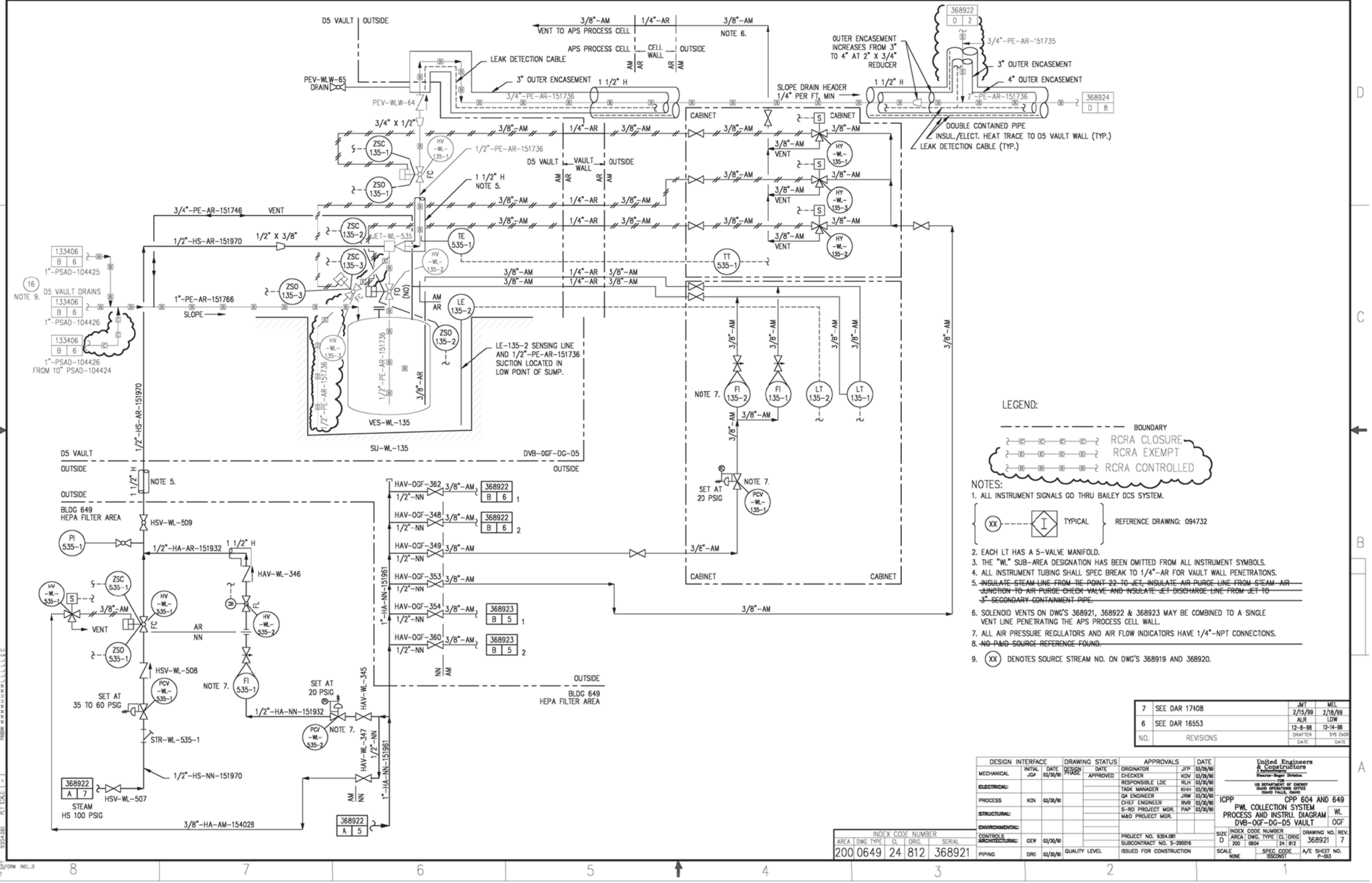

LEGEND:

BOUNDARY
RCRA CLOSURE
RCRA EXEMPT
RCRA CONTROLLED

NOTES:

1. ALL INSTRUMENT SIGNALS GO THRU BAILEY DCS SYSTEM.

(XX) ---- I TYPICAL — REFERENCE DRAWING: 094732

2. EACH LT HAS A 5-VALVE MANIFOLD.
3. THE "WL" SUB-AREA DESIGNATION HAS BEEN OMITTED FROM ALL INSTRUMENT SYMBOLS.
4. ALL INSTRUMENT TUBING SHALL SPEC BREAK TO 1/4"-AR FOR VAULT WALL PENETRATIONS.
5. ~~INSULATE STEAM LINE FROM TIE POINT 22 TO JET, INSULATE AIR PURGE LINE FROM STEAM AIR JUNCTION TO AIR PURGE CHECK VALVE AND INSULATE JET DISCHARGE LINE FROM JET TO 3" SECONDARY CONTAINMENT PIPE.~~
6. SOLENOID VENTS ON DWG'S 368921, 368922 & 368923 MAY BE COMBINED TO A SINGLE VENT LINE PENETRATING THE APS PROCESS CELL WALL.
7. ALL AIR PRESSURE REGULATORS AND AIR FLOW INDICATORS HAVE 1/4"-NPT CONNECTIONS.
8. ~~NO P&ID SOURCE REFERENCE FOUND.~~
9. (XX) DENOTES SOURCE STREAM NO. ON DWG'S 368919 AND 368920.

NO.	REVISIONS	DRAFTER	DATE	ENGR	DATE
7	SEE DAR 17408	JMT	2/15/99	MEL	2/18/99
6	SEE DAR 16553	ALR	12-8-98	LDW	12-14-98

DESIGN INTERFACE	INITIAL	DATE
MECHANICAL	JGA	03/30/90
~~ELECTRICAL~~		
PROCESS	KDV	03/30/90
~~STRUCTURAL~~		
~~ENVIRONMENTAL~~		
CONTROLS		
~~ARCHITECTURAL~~	GEW	03/30/90
PIPING	DRO	03/30/90

DRAWING STATUS	DATE
DESIGN PHASE	
APPROVED	
QUALITY LEVEL	

APPROVALS		DATE
ORIGINATOR	JFP	03/29/90
CHECKER	KDV	03/29/90
RESPONSIBLE LDE	RLH	03/30/90
TASK MANAGER	KHH	03/30/90
QA ENGINEER	JRW	03/30/90
CHIEF ENGINEER	RVR	03/30/90
S-RD PROJECT MGR.	PAP	03/30/90
M&O PROJECT MGR.		
PROJECT NO. 9354.081		
SUBCONTRACT NO. S-290016		
ISSUED FOR CONSTRUCTION		

United Engineers & Constructors
A Raytheon Company
Stearns-Roger Division
FOR
US DEPARTMENT OF ENERGY
IDAHO OPERATIONS OFFICE
IDAHO FALLS, IDAHO

ICPP CPP 604 AND 649
PWL COLLECTION SYSTEM
PROCESS AND INSTRU. DIAGRAM
DVB-OGF-DG-D5 VAULT
WL OGF

INDEX CODE NUMBER	AREA	DWG. TYPE	CL	ORIG.	SERIAL
	200	0649	24	812	368921

SIZE D — INDEX CODE NUMBER: AREA 200, DWG. TYPE 0604, CL 24, ORIG 812 — DRAWING NO. 368921 — REV. 7
SCALE NONE — SPEC CODE ISSCONST — A/E SHEET NO. P-003

File: 368921.dwg
Plotted by: Verma, Vijaya
On: 12/14/98 at 13:26:06
CAD NO. 368921
PLT SCALE 1 = 1
User: ARCHMON
Date: 12/14/98 at 13:26:06
PWM MMMMMMLLLLLC

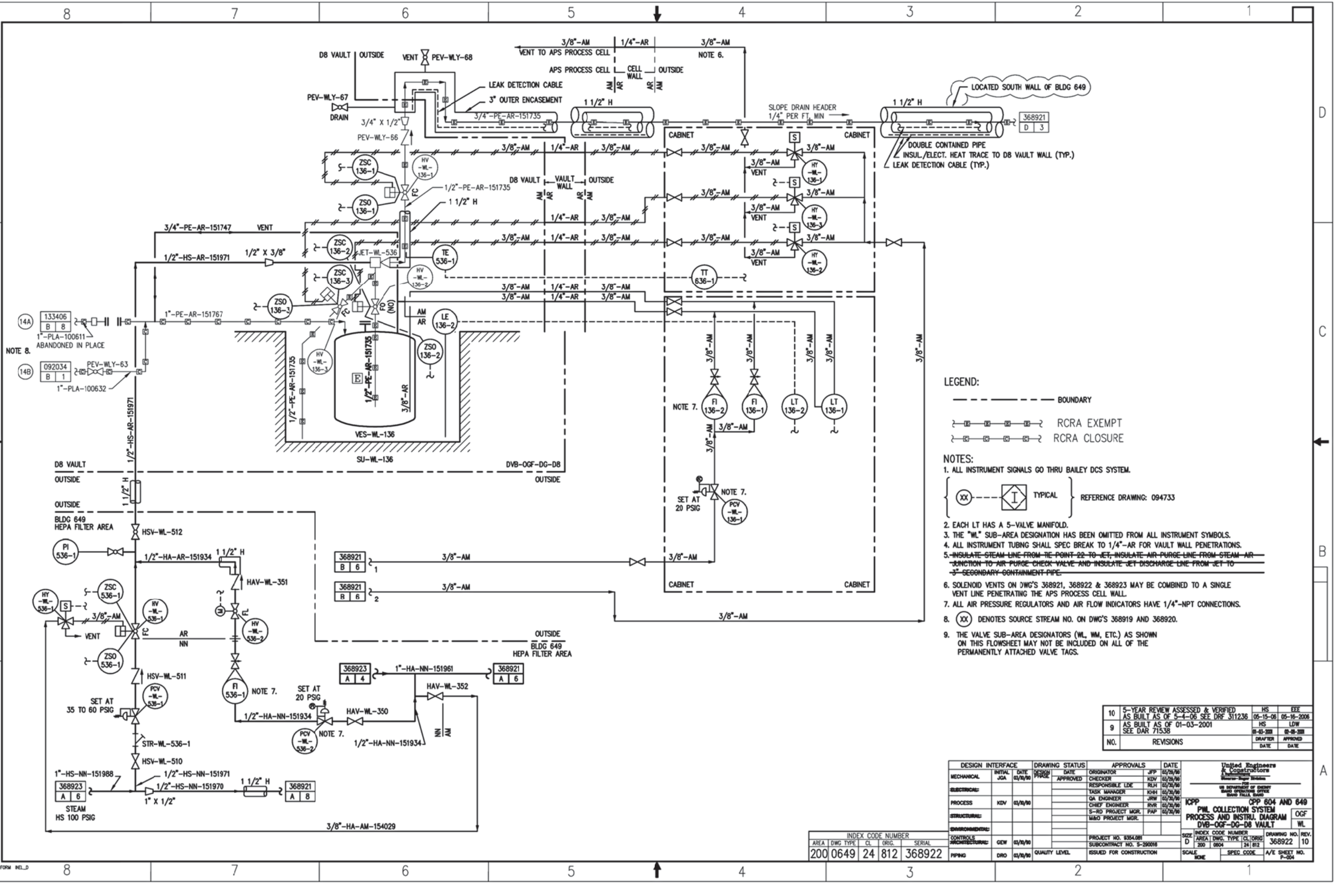

LEGEND:

- BOUNDARY
- RCRA EXEMPT
- RCRA CLOSURE

NOTES:

1. ALL INSTRUMENT SIGNALS GO THRU BAILEY DCS SYSTEM.

(XX) — I — TYPICAL — REFERENCE DRAWING: 094733

2. EACH LT HAS A 5-VALVE MANIFOLD.
3. THE "WL" SUB-AREA DESIGNATION HAS BEEN OMITTED FROM ALL INSTRUMENT SYMBOLS.
4. ALL INSTRUMENT TUBING SHALL SPEC BREAK TO 1/4"-AR FOR VAULT WALL PENETRATIONS.
5. ~~INSULATE STEAM LINE FROM TIE POINT 22 TO JET, INSULATE AIR PURGE LINE FROM STEAM AIR JUNCTION TO AIR PURGE CHECK VALVE AND INSULATE JET DISCHARGE LINE FROM JET TO 3" SECONDARY CONTAINMENT PIPE.~~
6. SOLENOID VENTS ON DWG'S 368921, 368922 & 368923 MAY BE COMBINED TO A SINGLE VENT LINE PENETRATING THE APS PROCESS CELL WALL.
7. ALL AIR PRESSURE REGULATORS AND AIR FLOW INDICATORS HAVE 1/4"-NPT CONNECTIONS.
8. (XX) DENOTES SOURCE STREAM NO. ON DWG'S 368919 AND 368920.
9. THE VALVE SUB-AREA DESIGNATORS (WL, WM, ETC.) AS SHOWN ON THIS FLOWSHEET MAY NOT BE INCLUDED ON ALL OF THE PERMANENTLY ATTACHED VALVE TAGS.

NO.	REVISIONS	DRAFTER DATE	APPROVED DATE
10	5-YEAR REVIEW ASSESSED & VERIFIED AS BUILT AS OF 5-4-06 SEE DRF 3111236	HS 05-15-06	EEE 05-16-2006
9	AS BUILT AS OF 01-03-2001 SEE DAR 71538	HS 02-03-2001	LDW 02-05-2001

DESIGN INTERFACE	INITIAL	DATE
MECHANICAL	JGA	03/30/90
ELECTRICAL:		
PROCESS	KDV	03/30/90
STRUCTURAL:		
ENVIRONMENTAL:		
CONTROLS ARCHITECTURAL:	GEW	03/30/90
PIPING	DRO	03/30/90

DRAWING STATUS	DATE
DESIGN PHASE	
APPROVED	
QUALITY LEVEL	

APPROVALS		DATE
ORIGINATOR	JFP	03/30/90
CHECKER	KDV	03/30/90
RESPONSIBLE LDE	RLH	03/30/90
TASK MANAGER	KHH	03/30/90
QA ENGINEER	JRW	03/30/90
CHIEF ENGINEER	RVR	03/30/90
S-RO PROJECT MGR.	PAP	03/30/90
M&O PROJECT MGR.		
PROJECT NO. 9354.001		
SUBCONTRACT NO. S-290016		
ISSUED FOR CONSTRUCTION		

United Engineers & Constructors
A Raytheon Company
Boston Massachusetts
FOR
US DEPARTMENT OF ENERGY
IDAHO OPERATIONS OFFICE
IDAHO FALLS, IDAHO

ICPP CPP 604 AND 649
PWL COLLECTION SYSTEM
PROCESS AND INSTRU. DIAGRAM OGF
DVB-OGF-DG-D8 VAULT WL

INDEX CODE NUMBER					
AREA	DWG TYPE	CL	ORIG.	SERIAL	
200	0649	24	812	368922	

SIZE	INDEX CODE NUMBER				DRAWING NO.	REV.
	AREA	DWG. TYPE	CL	ORIG		
D	200	0604	24	812	368922	10

SCALE NONE — SPEC CODE — A/E SHEET NO. P-204

ID: HSPENCER
Date: 05/16/06 - 10:36 AM Layout Name: Model
File: 368922-10.dwg
Path: P:\DRF3111236
FORM INEL_D

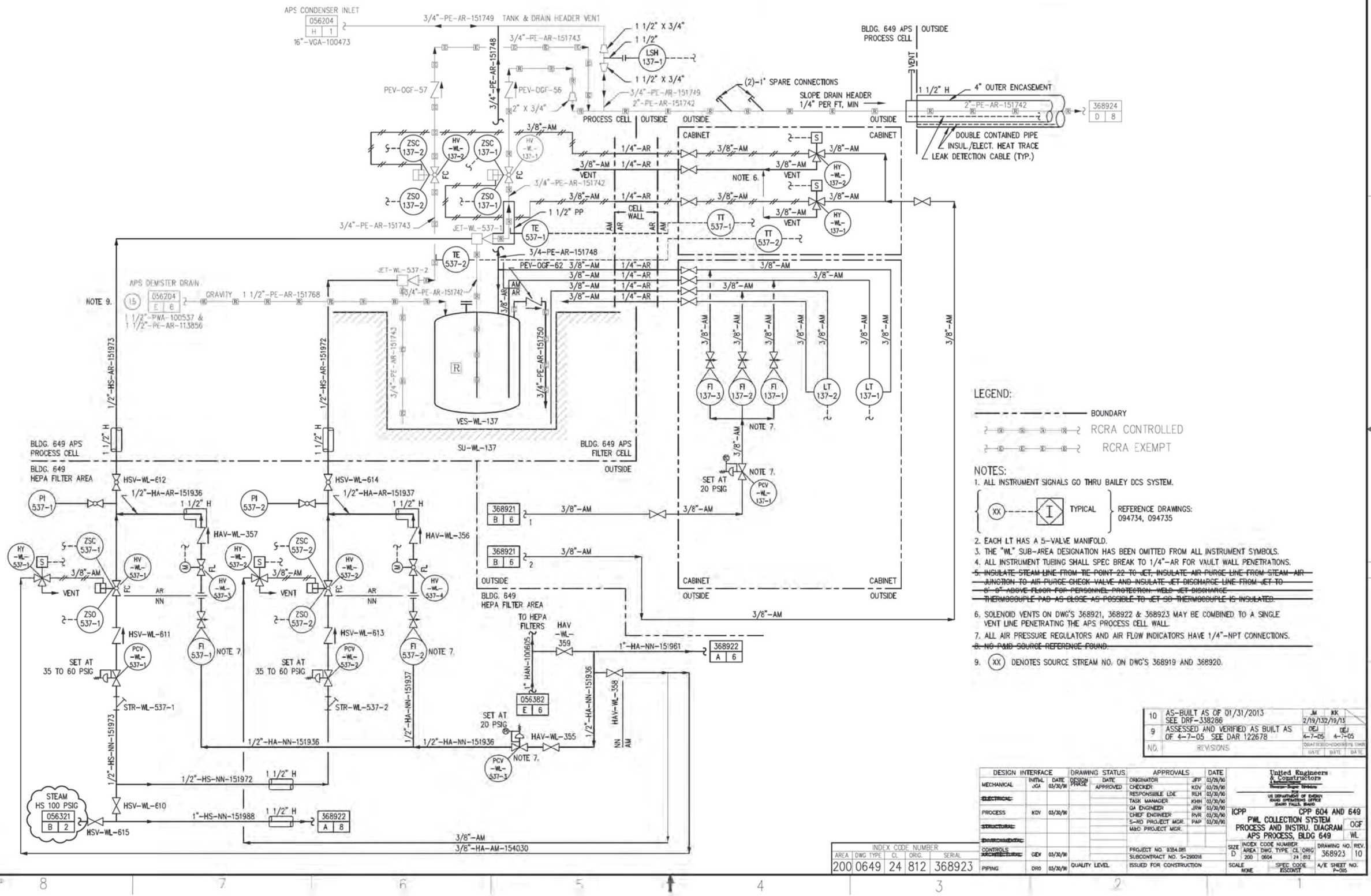
APS CONDENSER INLET
056204 H 1
16"-VGA-100473
3/4"-PE-AR-151749 TANK & DRAIN HEADER VENT
3/4"-PE-AR-151743
3/4"-PE-AR-151748
PEV-OGF-57
PEV-OGF-56
2" X 3/4"
1 1/2" X 3/4"
1 1/2"
LSH 137-1
3/4"-PE-AR-151749
2"-PE-AR-151742
(2)-1" SPARE CONNECTIONS
SLOPE DRAIN HEADER 1/4" PER FT, MIN
BLDG. 649 APS PROCESS CELL OUTSIDE
VENT
1 1/2" H
4" OUTER ENCASEMENT
2"-PE-AR-151742
368924 D 8
DOUBLE CONTAINED PIPE
INSUL./ELECT. HEAT TRACE
LEAK DETECTION CABLE (TYP.)
PROCESS CELL OUTSIDE
OUTSIDE
OUTSIDE
CABINET
CABINET
ZSC 137-2
ZSC 137-1
HV -WL- 137-2
HV -WL- 137-1
ZSO 137-2
ZSO 137-1
FC
3/8"-AM
1/4"-AR
VENT
NOTE 6.
HY -WL- 137-2
HY -WL- 137-1
TT 537-1
TT 537-2
CELL WALL
AM
AR
3/4"-PE-AR-151742
1 1/2" PP
JET-WL-537-1
TE 537-1
TE 537-2
3/4-PE-AR-151748
JET-WL-537-2
PEV-OGF-62
APS DEMISTER DRAIN
NOTE 9.
15 056204 E 6
GRAVITY 1 1/2"-PE-AR-151768
1 1/2"-PWA-100537 &
1 1/2"-PE-AR-113856
3/4"-PE-AR-151743
3/4"-PE-AR-151750
VES-WL-137
SU-WL-137
1/2"-HS-AR-151973
1/2"-HS-AR-151972
FI 137-3
FI 137-2
FI 137-1
LT 137-2
LT 137-1
NOTE 7.
SET AT 20 PSIG
PCV -WL- 137-1
BLDG. 649 APS FILTER CELL
OUTSIDE
BLDG. 649 APS PROCESS CELL
BLDG. 649 HEPA FILTER AREA
HSV-WL-612
HSV-WL-614
1/2"-HA-AR-151936
1/2"-HA-AR-151937
PI 537-1
PI 537-2
HAV-WL-357
HAV-WL-356
HY -WL- 537-1
HY -WL- 537-2
HV -WL- 537-1
HV -WL- 537-2
HV -WL- 537-3
HV -WL- 537-4
AR
NN
HSV-WL-611
HSV-WL-613
FI 537-1
FI 537-2
SET AT 35 TO 60 PSIG
PCV -WL- 537-1
PCV -WL- 537-2
STR-WL-537-1
STR-WL-537-2
1/2"-HS-NN-151973
1/2"-HA-NN-151936
1/2"-HA-NN-151937
1/2"-HS-NN-151972
1 1/2" H
HSV-WL-610
HSV-WL-615
STEAM HS 100 PSIG 056321 B 2
1"-HS-NN-151988
368922 A 8
368921 B 6 1
368921 B 6 2
3/8"-AM
3/8"-HA-AM-154030
BLDG. 649 HEPA FILTER AREA
TO HEPA FILTERS
HAV -WL- 359
1"-HA-NN-151961
368922 A 6
1" HAN-100605
056382 E 6
SET AT 20 PSIG
HAV-WL-355
HAV-WL-358
PCV -WL- 537-3
NOTE 7.
LEGEND:
BOUNDARY
RCRA CONTROLLED
RCRA EXEMPT
NOTES:
1. ALL INSTRUMENT SIGNALS GO THRU BAILEY DCS SYSTEM.
XX I TYPICAL
REFERENCE DRAWINGS: 094734, 094735
2. EACH LT HAS A 5-VALVE MANIFOLD.
3. THE "WL" SUB-AREA DESIGNATION HAS BEEN OMITTED FROM ALL INSTRUMENT SYMBOLS.
4. ALL INSTRUMENT TUBING SHALL SPEC BREAK TO 1/4"-AR FOR VAULT WALL PENETRATIONS.
5. INSULATE STEAM LINE FROM TIE POINT 22 TO JET, INSULATE AIR PURGE LINE FROM STEAM-AIR JUNCTION TO AIR PURGE CHECK VALVE AND INSULATE JET DISCHARGE LINE FROM JET TO 6'-0" ABOVE FLOOR FOR PERSONNEL PROTECTION. WELD JET DISCHARGE THERMOCOUPLE PAD AS CLOSE AS POSSIBLE TO JET SO THERMOCOUPLE IS INSULATED.
6. SOLENOID VENTS ON DWG'S 368921, 368922 & 368923 MAY BE COMBINED TO A SINGLE VENT LINE PENETRATING THE APS PROCESS CELL WALL.
7. ALL AIR PRESSURE REGULATORS AND AIR FLOW INDICATORS HAVE 1/4"-NPT CONNECTIONS.
8. NO P&ID SOURCE REFERENCE FOUND.
9. (XX) DENOTES SOURCE STREAM NO. ON DWG'S 368919 AND 368920.
10 AS-BUILT AS OF 01/31/2013 SEE DRF-338286 JM KK 2/19/13 2/19/13
9 ASSESSED AND VERIFIED AS BUILT AS OF 4-7-05 SEE DAR 122678 DEJ 4-7-05 DEJ 4-7-05
NO. REVISIONS DRAFTED DATE CHECKED DATE CORRECTS DWG DATE
DESIGN INTERFACE
MECHANICAL INITIAL JGA DATE 03/30/90
ELECTRICAL
PROCESS KDV 03/30/90
STRUCTURAL
ENVIRONMENTAL
CONTROLS
ARCHITECTURAL GEH 03/30/90
PIPING DRO 03/30/90
DRAWING STATUS
DESIGN PHASE
DATE APPROVED
QUALITY LEVEL
APPROVALS
ORIGINATOR JFP 03/29/90
CHECKER KDV 03/29/90
RESPONSIBLE LDE RLH 03/30/90
TASK MANAGER KHH 03/30/90
QA ENGINEER JRW 03/30/90
CHIEF ENGINEER PVR 03/30/90
S-RD PROJECT MGR. PAP 03/30/90
M&O PROJECT MGR.
PROJECT NO. 9354.081
SUBCONTRACT NO. S-290016
ISSUED FOR CONSTRUCTION
DATE 03/29/90
United Engineers & Constructors
A Business Unit of the International Power Group
FOR US DEPARTMENT OF ENERGY IDAHO OPERATIONS OFFICE IDAHO FALLS, IDAHO
ICPP CPP 604 AND 649
PWL COLLECTION SYSTEM
PROCESS AND INSTRU. DIAGRAM
APS PROCESS, BLDG 649
OGF WL
SIZE D
INDEX CODE NUMBER AREA 200 DWG. TYPE 0604 CL 24 ORIG 812
DRAWING NO. 368923
REV. 10
SCALE NONE
SPEC CODE ESCONST
A/E SHEET NO. P-005
INDEX CODE NUMBER
AREA 200 DWG TYPE 0649 CL 24 ORIG 812 SERIAL 368923

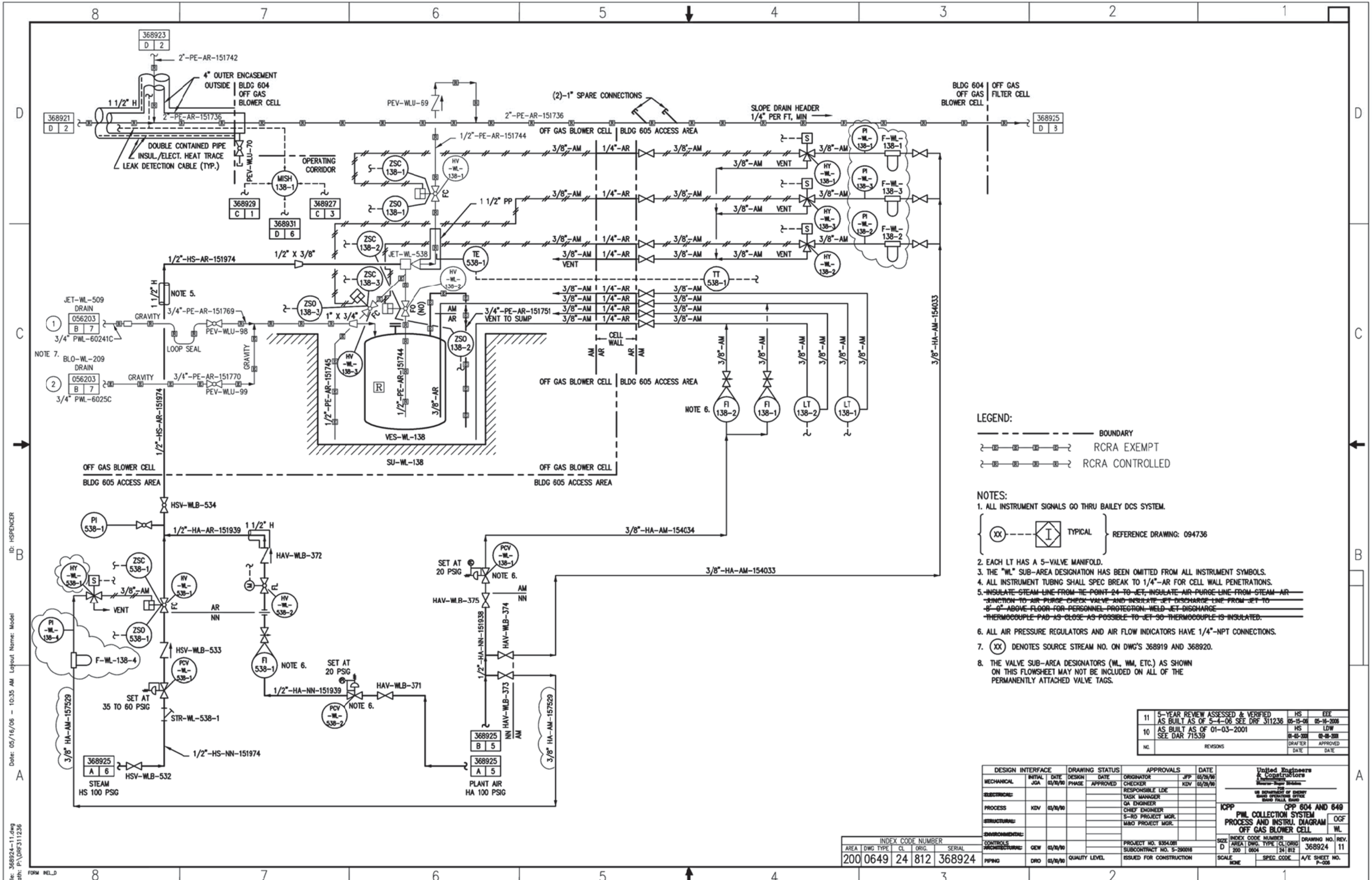

LEGEND:

- BOUNDARY
- RCRA EXEMPT
- RCRA CONTROLLED

NOTES:

1. ALL INSTRUMENT SIGNALS GO THRU BAILEY DCS SYSTEM.

   (XX) — I TYPICAL } REFERENCE DRAWING: 094736

2. EACH LT HAS A 5-VALVE MANIFOLD.
3. THE "WL" SUB-AREA DESIGNATION HAS BEEN OMITTED FROM ALL INSTRUMENT SYMBOLS.
4. ALL INSTRUMENT TUBING SHALL SPEC BREAK TO 1/4"-AR FOR CELL WALL PENETRATIONS.
5. ~~INSULATE STEAM LINE FROM TIE POINT 24 TO JET, INSULATE AIR PURGE LINE FROM STEAM AIR JUNCTION TO AIR PURGE CHECK VALVE AND INSULATE JET DISCHARGE LINE FROM JET TO 8'-0" ABOVE FLOOR FOR PERSONNEL PROTECTION. WELD JET DISCHARGE THERMOCOUPLE PAD AS CLOSE AS POSSIBLE TO JET SO THERMOCOUPLE IS INSULATED.~~
6. ALL AIR PRESSURE REGULATORS AND AIR FLOW INDICATORS HAVE 1/4"-NPT CONNECTIONS.
7. (XX) DENOTES SOURCE STREAM NO. ON DWG'S 368919 AND 368920.
8. THE VALVE SUB-AREA DESIGNATORS (WL, WM, ETC.) AS SHOWN ON THIS FLOWSHEET MAY NOT BE INCLUDED ON ALL OF THE PERMANENTLY ATTACHED VALVE TAGS.

NO.	REVISIONS	DRAFTER	DATE	APPROVED	DATE
11	5-YEAR REVIEW ASSESSED & VERIFIED AS BUILT AS OF 5-4-06 SEE DRF 311236	HS	05-15-06	EEE	05-16-2006
10	AS BUILT AS OF 01-03-2001 SEE DAR 71539	HS	01-03-2001	LDW	02-05-2001

DESIGN INTERFACE	INITIAL	DATE
MECHANICAL	JGA	03/19/99
ELECTRICAL:		
PROCESS	KDV	03/19/99
STRUCTURAL:		
ENVIRONMENTAL:		
CONTROLS ARCHITECTURAL:	GEW	03/19/99
PIPING	DRO	03/19/99

DRAWING STATUS	DATE
DESIGN PHASE	
APPROVED	
QUALITY LEVEL	

APPROVALS		DATE
ORIGINATOR	JPP	03/29/99
CHECKER	KDV	03/29/99
RESPONSIBLE LDE		
TASK MANAGER		
QA ENGINEER		
CHIEF ENGINEER		
S-RD PROJECT MGR.		
W&O PROJECT MGR.		
PROJECT NO. 9354.081		
SUBCONTRACT NO. S-290018		
ISSUED FOR CONSTRUCTION		

United Engineers & Constructors
A Raytheon Engineers & Constructors Company
for
US DEPARTMENT OF ENERGY
IDAHO OPERATIONS OFFICE
IDAHO FALLS, IDAHO

ICPP CPP 604 AND 649
PWL COLLECTION SYSTEM
PROCESS AND INSTRU. DIAGRAM
OFF GAS BLOWER CELL
OGF WL

INDEX CODE NUMBER					
AREA	DWG TYPE	CL	ORIG.	SERIAL	
200	0649	24	812	368924	

SIZE	INDEX CODE NUMBER				DRAWING NO.	REV.
	AREA	DWG. TYPE	CL	ORIG		
D	200	0604	24	812	368924	11

SCALE NONE | SPEC. CODE | A/E SHEET NO. P-005

ID: HSPENCER
Date: 05/16/06 - 10:35 AM Layout Name: Model
File: 368924-11.dwg
Path: P:\DRF311236
FORM INCL_D

LEGEND:

BOUNDARY

RCRA EXEMPT

RCRA CONTROLLED

NOTES:

1. ALL INSTRUMENT SIGNALS GO THRU BAILEY DCS SYSTEM.

(XX) ----- [I] TYPICAL — REFERENCE DRAWINGS: 094737, 094738

2. EACH LT HAS A 5-VALVE MANIFOLD.
3. THE "WL" SUB-AREA DESIGNATION HAS BEEN OMITTED FROM ALL INSTRUMENT SYMBOLS.
4. ALL INSTRUMENT TUBING SHALL SPEC BREAK TO 1/4"-AR FOR CELL WALL PENETRATIONS.
5. ~~INSULATE STEAM LINE FROM TIE POINT 24 TO JET, INSULATE AIR PURGE LINE FROM STEAM-AIR JUNCTION TO AIR PURGE CHECK VALVE AND INSULATE JET DISCHARGE LINE FROM JET TO 8'-0" ABOVE FLOOR FOR PERSONNEL PROTECTION. WELD JET DISCHARGE THERMOCOUPLE PAD AS CLOSE AS POSSIBLE TO JET SO THERMOCOUPLE IS INSULATED.~~
6. ~~WINCO TO EXTEND WL-305 PSV DRAIN TO SUMP.~~
7. ALL AIR PRESSURE REGULATORS AND AIR FLOW INDICATORS HAVE 1/4"-NPT CONNECTIONS.
8. (XX) DENOTES SOURCE STREAM NO. ON DWG'S 368919 AND 368920.

NO.	REVISIONS	DRAFTER DATE	APPROVED DATE
10	ASSESSED AND VERIFIED AS BUILT AS OF 12-16-03 SEE DAR 107817	EEE 1/15/04	DEJ 2/2/04

INDEX CODE NUMBER				
AREA	DWG TYPE	CL	ORIG.	SERIAL
200	0649	24	812	368925

DESIGN INTERFACE	INITIAL	DATE	APPROVALS		DATE
MECHANICAL	JGA	03/30/90	ORIGINATOR	JFP	03/29/90
~~ELECTRICAL~~			CHECKER	KDV	03/29/90
PROCESS	KDV	03/30/90	RESPONSIBLE LDE	RLH	03/30/90
~~STRUCTURAL~~			TASK MANAGER	KHH	03/30/90
~~ENVIRONMENTAL~~			QA ENGINEER	JRW	03/30/90
CONTROLS ~~ARCHITECTURAL~~	GEW	03/30/90	CHIEF ENGINEER	RVR	03/30/90
PIPING	DRO	03/30/90	S-RD PROJECT MGR.	PAP	03/30/90
			M&O PROJECT MGR.		

DRAWING STATUS: DESIGN PHASE — DATE APPROVED

QUALITY LEVEL

PROJECT NO. 9354.081
SUBCONTRACT NO. S-290016
ISSUED FOR CONSTRUCTION

United Engineers & Constructors
Stearns-Roger Division
FOR
US DEPARTMENT OF ENERGY
IDAHO OPERATIONS OFFICE
IDAHO FALLS, IDAHO

ICPP CPP 604 AND 649
PWL COLLECTION SYSTEM
P & I D
OFF GAS FILTER CELL

OGF
WL

SIZE	AREA	DWG. TYPE	CL	ORIG	DRAWING NO.	REV.
D	200	0604	24	812	368925	10

SCALE NONE — SPEC CODE — A/E SHEET NO. P-007

FORM INEL_D

File: 368925-10.dwg CAD NO. 368925.DWG
ID: EEERKSN
Drawn in Model Space 02/03/04 - 2:01 P.M.

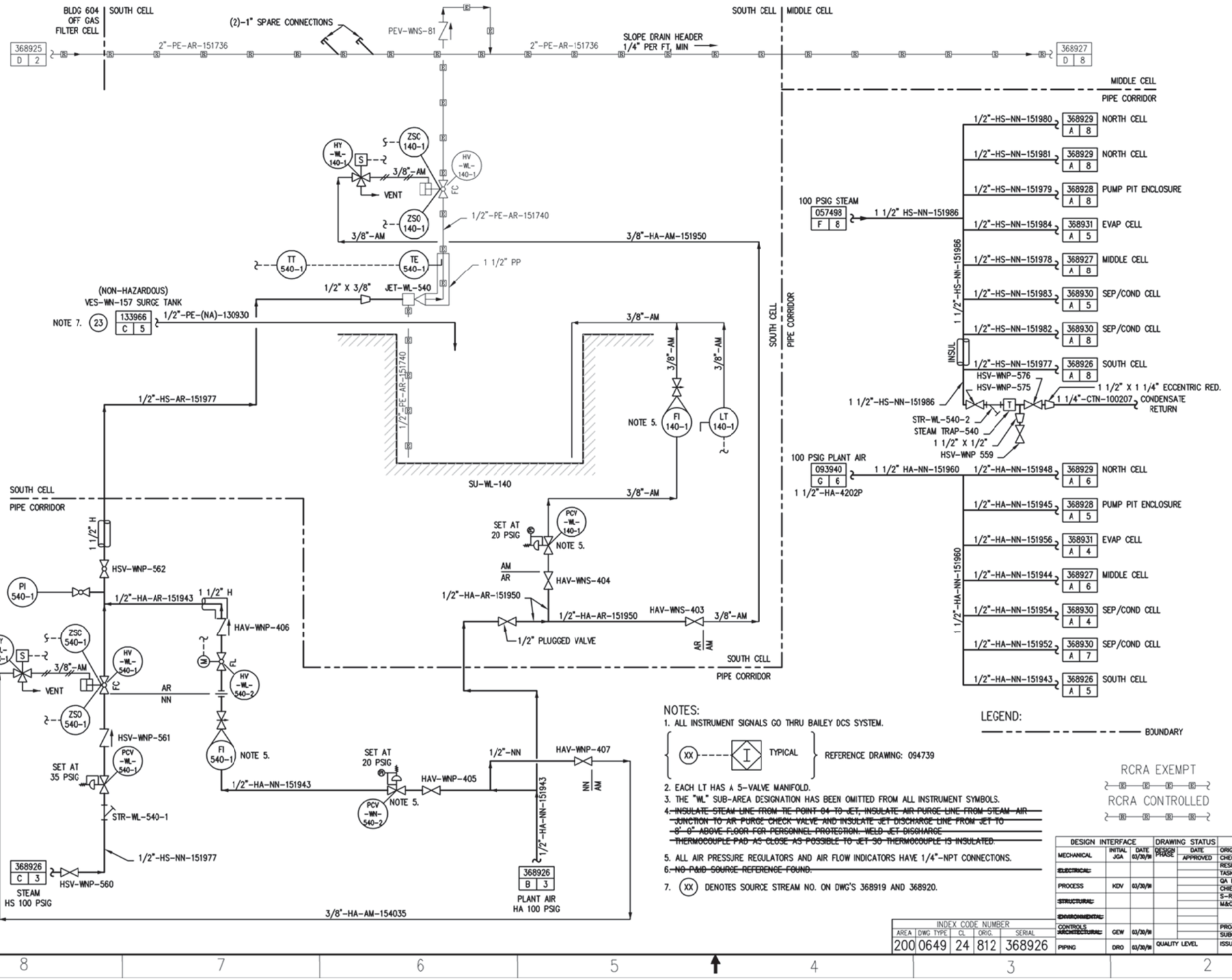

NOTES:

1. ALL INSTRUMENT SIGNALS GO THRU BAILEY DCS SYSTEM.

{ (XX) — I TYPICAL } REFERENCE DRAWING: 094739

2. EACH LT HAS A 5-VALVE MANIFOLD.
3. THE "WL" SUB-AREA DESIGNATION HAS BEEN OMITTED FROM ALL INSTRUMENT SYMBOLS.
4. ~~INSULATE STEAM LINE FROM TIE POINT 04 TO JET, INSULATE AIR PURGE LINE FROM STEAM-AIR JUNCTION TO AIR PURGE CHECK VALVE AND INSULATE JET DISCHARGE LINE FROM JET TO 8'-0" ABOVE FLOOR FOR PERSONNEL PROTECTION. WELD JET DISCHARGE THERMOCOUPLE PAD AS CLOSE AS POSSIBLE TO JET SO THERMOCOUPLE IS INSULATED.~~
5. ALL AIR PRESSURE REGULATORS AND AIR FLOW INDICATORS HAVE 1/4"-NPT CONNECTIONS.
6. ~~NO P&ID SOURCE REFERENCE FOUND.~~
7. (XX) DENOTES SOURCE STREAM NO. ON DWG'S 368919 AND 368920.

LEGEND:

BOUNDARY

RCRA EXEMPT

RCRA CONTROLLED

NO.	REVISIONS	DRAFTER DATE	APPROVED DATE
9	ASSESSED AND VERIFIED AS BUILT AS OF 12-16-03 SEE DAR 107817	EEE 1/15/04	DEJ 2/2/04

DESIGN INTERFACE	INITIAL	DATE
MECHANICAL	JGA	03/30/04
ELECTRICAL:		
PROCESS	KDV	03/30/04
STRUCTURAL:		
ENVIRONMENTAL:		
CONTROLS	GEW	03/30/04
ARCHITECTURAL:		
PIPING	DRO	03/30/04

DRAWING STATUS	DATE
DESIGN PHASE	
APPROVED	

APPROVALS		DATE
ORIGINATOR	JFP	03/29/04
CHECKER	KDV	03/29/04
RESPONSIBLE LDE	RLH	03/30/04
TASK MANAGER	KHH	03/30/04
QA ENGINEER	JRW	03/30/04
CHIEF ENGINEER	RVR	03/30/04
S-RD PROJECT MGR.	PAP	03/30/04
M&O PROJECT MGR.		
PROJECT NO. 6354.081		
SUBCONTRACT NO. S-290016		
ISSUED FOR CONSTRUCTION		

QUALITY LEVEL

United Engineers & Constructors
A Business Unit of The Washington Group International
FOR
US DEPARTMENT OF ENERGY
IDAHO OPERATIONS OFFICE
IDAHO FALLS, IDAHO

ICPP CPP 604 AND 649
PWL COLLECTION SYSTEM
P & I D
SOUTH CELL
OGF
WN WL

INDEX CODE NUMBER					DRAWING NO.	REV.
AREA	DWG TYPE	CL	ORIG.	SERIAL		
200	0649	24	812	368926	368926	9

SIZE D
SCALE NONE
SPEC CODE
A/E SHEET NO. P-008

INDEX CODE NUMBER					
AREA	DWG TYPE	CL	ORIG.	SERIAL	
200	0649	24	812	368926	

FORM INEL_D

ID: EEERKSN
Drawn in Model Space
Date: 02/02/04 - 2:22 P.M.
PEN 1 2 3 4 5 6 7 8 9 10 11 12 13
FRAM M M M M M M L L L L L L
File: 368926.dwg
CAD NO. 368926.DWG
Rev: P-008 Revision: 9 Plotted: 02/02/04 - 2:22 P.M.

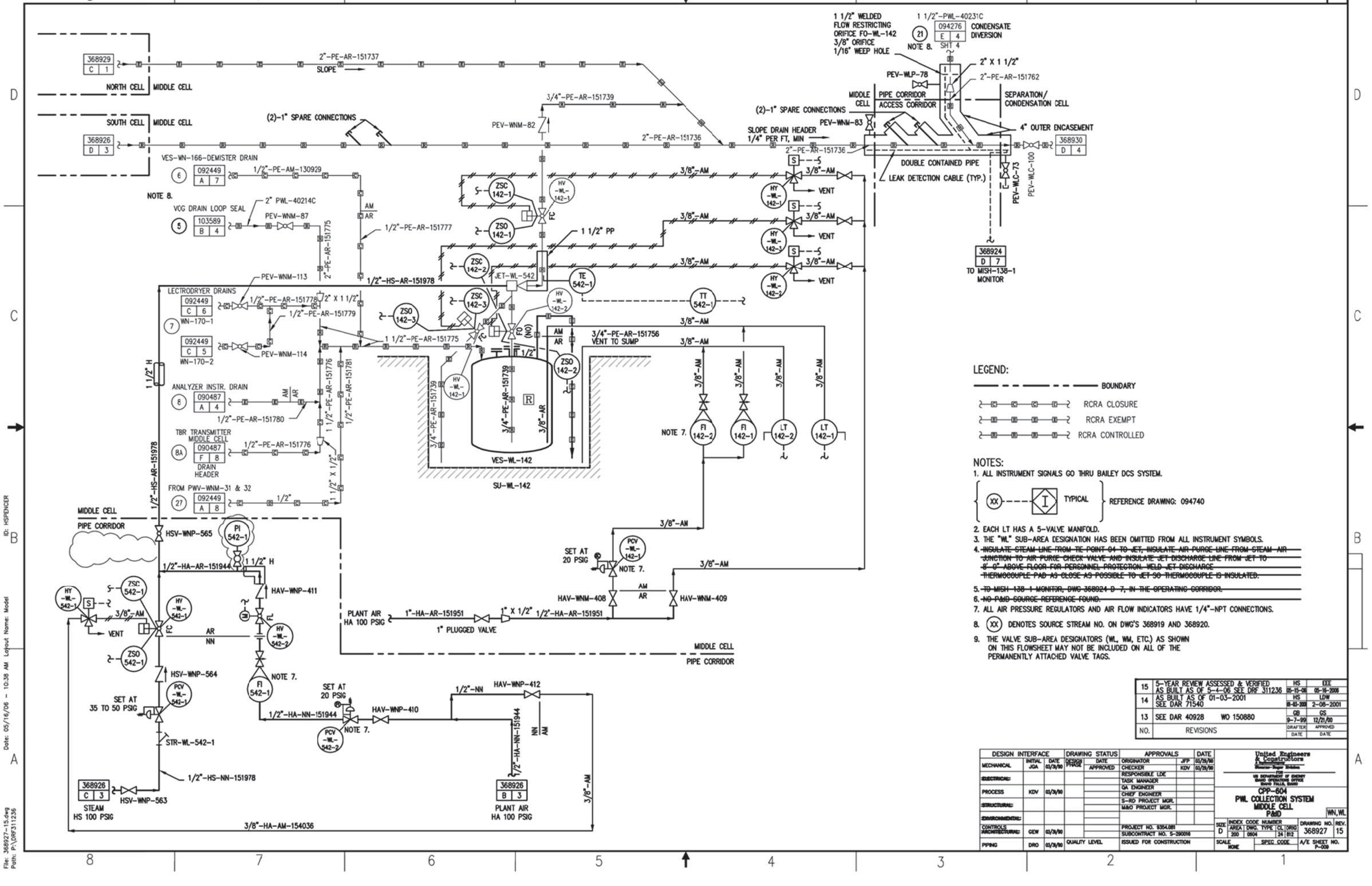
368929 C 1
NORTH CELL MIDDLE CELL
2"-PE-AR-151737
SLOPE
SOUTH CELL MIDDLE CELL
368926 D 3
(2)-1" SPARE CONNECTIONS
3/4"-PE-AR-151739
PEV-WNM-82
2"-PE-AR-151736
VES-WN-166-DEMISTER DRAIN
6
092449 A 7
1/2"-PE-AM-130929
NOTE 8.
VOG DRAIN LOOP SEAL
5
103589 B 4
2" PWL-40214C
PEV-WNM-87
2"-PE-AR-151775
AM AR
1/2"-PE-AR-151777
1 1/2" PP
ZSC 142-1
ZSO 142-1
HV -WL- 142-1
FC
ZSC 142-2
JET-WL-542
TE 542-1
TT 542-1
1/2"-HS-AR-151978
PEV-WNM-113
LECTRODRYER DRAINS
7
092449 C 6
WN-170-1
1/2"-PE-AR-151778
2" X 1 1/2"
1/2"-PE-AR-151779
092449 C 5
WN-170-2
PEV-WNM-114
ZSC 142-3
ZSO 142-3
HV -WL- 142-2
FO (NO)
1 1/2"-PE-AR-151775
1 1/2" H
ANALYZER INSTR. DRAIN
8
090487 A 4
AM AR
1/2"-PE-AR-151780
TBR TRANSMITTER MIDDLE CELL
8A
090487 F 8
DRAIN HEADER
1/2"-PE-AR-151776
1 1/2"-PE-AR-151776
1 1/2"-PE-AR-151781
1/2"-PE-AR-151739
3/4"-PE-AR-151739
3/8"-AR
R
VES-WL-142
SU-WL-142
3/4"-PE-AR-151756
VENT TO SUMP
ZSO 142-2
HV -WL- 142-1
FROM PWV-WNM-31 & 32
27
092449 A 8
1/2"
1 1/2" X 1/2"
1/2"-HS-AR-151978
MIDDLE CELL
PIPE CORRIDOR
HSV-WNP-565
PI 542-1
1/2"-HA-AR-151944
1 1/2" H
HAV-WNP-411
HY -WL- 542-1
ZSC 542-1
ZSO 542-1
3/8"-AM
VENT
FC
AR
NN
HV -WL- 542-2
HSV-WNP-564
NOTE 7.
FI 542-1
PCV -WL- 542-1
SET AT 35 TO 50 PSIG
STR-WL-542-1
1/2"-HS-NN-151978
368926 C 3
STEAM HS 100 PSIG
HSV-WNP-563
3/8"-HA-AM-154036
SET AT 20 PSIG
1/2"-HA-NN-151944
HAV-WNP-410
1/2"-NN
HAV-WNP-412
1/2"-HA-NN-151944
NN AM
368926 B 3
PLANT AIR HA 100 PSIG
3/8"-AM
PCV -WL- 142-1
SET AT 20 PSIG
NOTE 7.
HAV-WNM-408
AM AR
HAV-WNM-409
PLANT AIR HA 100 PSIG
1"-HA-AR-151951
1" X 1/2"
1/2"-HA-AR-151951
1" PLUGGED VALVE
MIDDLE CELL
PIPE CORRIDOR
1 1/2" WELDED FLOW RESTRICTING ORIFICE FO-WL-142 3/8" ORIFICE 1/16" WEEP HOLE
1 1/2"-PWL-40231C
21
094276 E 4 SHT 4
CONDENSATE DIVERSION
NOTE 8.
2" X 1 1/2"
PEV-WLP-78
2"-PE-AR-151762
MIDDLE CELL
PIPE CORRIDOR
ACCESS CORRIDOR
SEPARATION/ CONDENSATION CELL
(2)-1" SPARE CONNECTIONS
PEV-WNM-83
SLOPE DRAIN HEADER 1/4" PER FT, MIN
4" OUTER ENCASEMENT
368930 D 4
2"-PE-AR-151736
DOUBLE CONTAINED PIPE
LEAK DETECTION CABLE (TYP.)
PEV-WLC-73
PEV-WLC-100
368924 D 7
TO MISH-138-1 MONITOR
3/8"-AM
VENT
HY -WL- 142-1
HY -WL- 142-3
HY -WL- 142-2
FI 142-2
FI 142-1
LT 142-2
LT 142-1
NOTE 7.
LEGEND:
BOUNDARY
RCRA CLOSURE
RCRA EXEMPT
RCRA CONTROLLED
NOTES:
1. ALL INSTRUMENT SIGNALS GO THRU BAILEY DCS SYSTEM.
XX
I
TYPICAL
REFERENCE DRAWING: 094740
2. EACH LT HAS A 5-VALVE MANIFOLD.
3. THE "WL" SUB-AREA DESIGNATION HAS BEEN OMITTED FROM ALL INSTRUMENT SYMBOLS.
4. INSULATE STEAM LINE FROM TE POINT 04 TO JET, INSULATE AIR PURGE LINE FROM STEAM AIR JUNCTION TO AIR PURGE CHECK VALVE AND INSULATE JET DISCHARGE LINE FROM JET TO 8'-0" ABOVE FLOOR FOR PERSONNEL PROTECTION. WELD JET DISCHARGE THERMOCOUPLE PAD AS CLOSE AS POSSIBLE TO JET SO THERMOCOUPLE IS INSULATED.
5. TO MISH-138-1 MONITOR, DWG 368924 D-7, IN THE OPERATING CORRIDOR.
6. NO P&ID SOURCE REFERENCE FOUND.
7. ALL AIR PRESSURE REGULATORS AND AIR FLOW INDICATORS HAVE 1/4"-NPT CONNECTIONS.
8. XX DENOTES SOURCE STREAM NO. ON DWG'S 368919 AND 368920.
9. THE VALVE SUB-AREA DESIGNATORS (WL, WM, ETC.) AS SHOWN ON THIS FLOWSHEET MAY NOT BE INCLUDED ON ALL OF THE PERMANENTLY ATTACHED VALVE TAGS.
15 5-YEAR REVIEW ASSESSED & VERIFIED AS BUILT AS OF 5-4-06 SEE DRF 311236 HS 05-15-06 EEE 05-16-2006
14 AS BUILT AS OF 01-03-2001 SEE DAR 71540 HS 01-03-2001 LDW 2-08-2001
13 SEE DAR 40928 WO 150880 GB 9-7-99 GS 12/21/00
NO. REVISIONS DRAFTER APPROVED DATE DATE
DESIGN INTERFACE
MECHANICAL JGA 03/31/00
ELECTRICAL:
PROCESS KDV 03/31/00
STRUCTURAL:
ENVIRONMENTAL:
CONTROLS ARCHITECTURAL: GEW 03/31/00
PIPING DRO 03/31/00
DRAWING STATUS
DESIGN PHASE
DATE
APPROVED
QUALITY LEVEL
APPROVALS
ORIGINATOR JFP 03/29/00
CHECKER KDV 03/29/00
RESPONSIBLE LDE
TASK MANAGER
QA ENGINEER
CHIEF ENGINEER
S-RD PROJECT MGR.
M&O PROJECT MGR.
PROJECT NO. 9354.081
SUBCONTRACT NO. 5-290016
ISSUED FOR CONSTRUCTION
DATE
United Engineers & Constructors
A Raytheon Company
Morrison-Knudsen Corporation
FOR US DEPARTMENT OF ENERGY IDAHO OPERATIONS OFFICE IDAHO FALLS, IDAHO
CPP-604
PWL COLLECTION SYSTEM
MIDDLE CELL
P&ID
WN, WL
SIZE D
INDEX CODE NUMBER AREA 200 DWG. 0604 TYPE 24 CL/ORG 812
DRAWING NO. 368927
REV. 15
SCALE NONE
SPEC CODE
A/E SHEET NO. P-009
ID: HSPENCER
Date: 05/16/06 - 10:38 AM Layout Name: Model
File: 368927-15.dwg
Path: P:\DRF311236

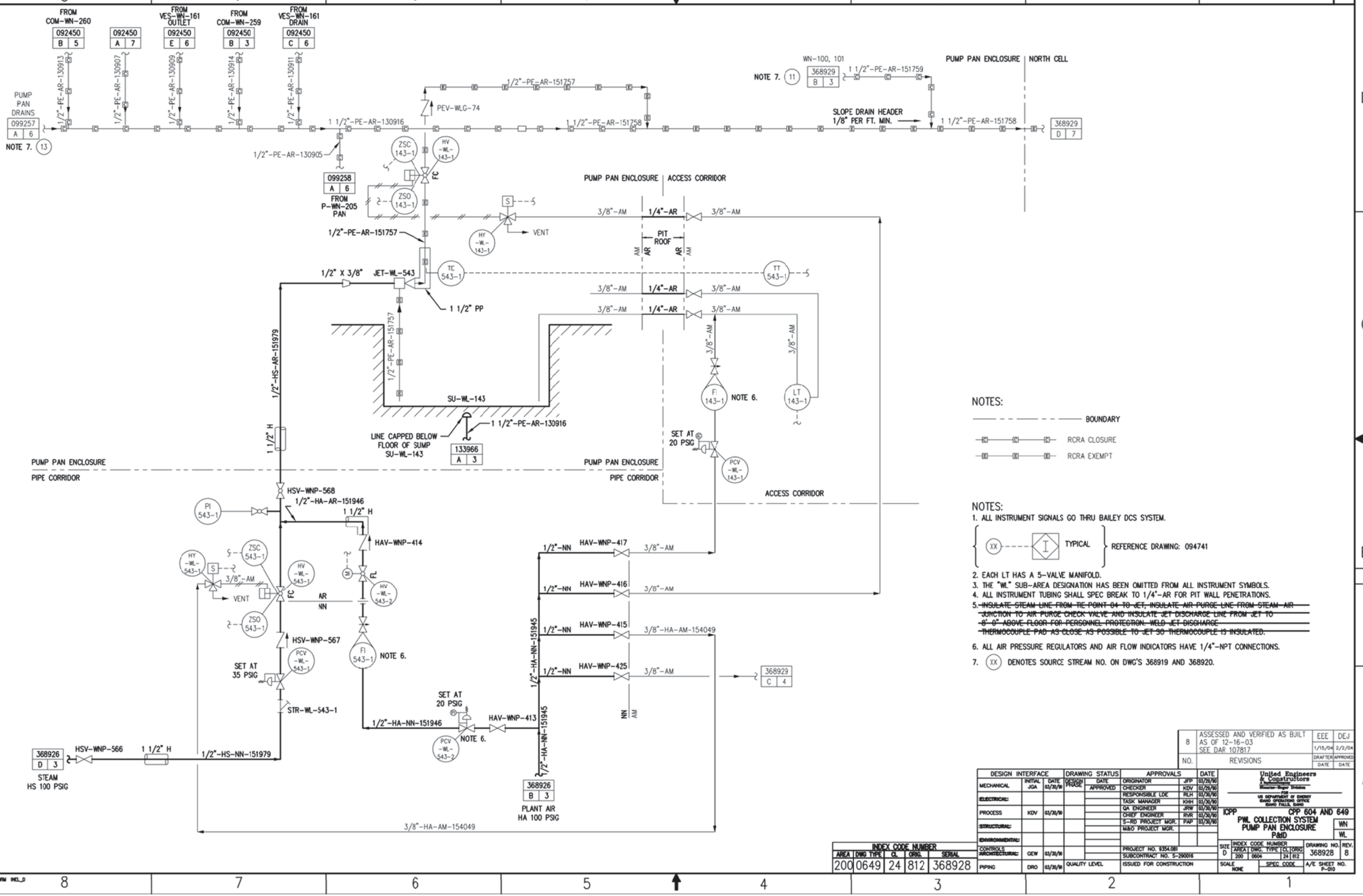

NOTES:

BOUNDARY

RCRA CLOSURE

RCRA EXEMPT

NOTES:

1. ALL INSTRUMENT SIGNALS GO THRU BAILEY DCS SYSTEM.

(XX) ---- I TYPICAL — REFERENCE DRAWING: 094741

2. EACH LT HAS A 5-VALVE MANIFOLD.
3. THE "WL" SUB-AREA DESIGNATION HAS BEEN OMITTED FROM ALL INSTRUMENT SYMBOLS.
4. ALL INSTRUMENT TUBING SHALL SPEC BREAK TO 1/4"-AR FOR PIT WALL PENETRATIONS.
5. ~~INSULATE STEAM LINE FROM TIE POINT 04 TO JET, INSULATE AIR PURGE LINE FROM STEAM-AIR JUNCTION TO AIR PURGE CHECK VALVE AND INSULATE JET DISCHARGE LINE FROM JET TO 8'-0" ABOVE FLOOR FOR PERSONNEL PROTECTION. WELD JET DISCHARGE THERMOCOUPLE PAD AS CLOSE AS POSSIBLE TO JET SO THERMOCOUPLE IS INSULATED.~~
6. ALL AIR PRESSURE REGULATORS AND AIR FLOW INDICATORS HAVE 1/4"-NPT CONNECTIONS.
7. (XX) DENOTES SOURCE STREAM NO. ON DWG'S 368919 AND 368920.

NO.	REVISIONS	DRAFTER DATE	APPROVED DATE
8	ASSESSED AND VERIFIED AS BUILT AS OF 12-16-03 SEE DAR 107817	EEE 1/15/04	DEJ 2/2/04

DESIGN INTERFACE	INITIAL	DATE
MECHANICAL	JGA	03/30/04
ELECTRICAL:		
PROCESS	KDV	03/30/04
STRUCTURAL:		
ENVIRONMENTAL:		
CONTROLS ARCHITECTURAL:	GEW	03/30/04
PIPING	DRO	03/30/04

DRAWING STATUS	DATE
DESIGN PHASE	
APPROVED	
QUALITY LEVEL	

APPROVALS		DATE
ORIGINATOR	JPP	03/29/04
CHECKER	KDV	03/29/04
RESPONSIBLE LDE	RLH	03/30/04
TASK MANAGER	KHH	03/30/04
QA ENGINEER	JRW	03/30/04
CHIEF ENGINEER	RVR	03/30/04
S-RD PROJECT MGR.	PAP	03/30/04
M&O PROJECT MGR.		
PROJECT NO. 8354.081		
SUBCONTRACT NO. S-250016		
ISSUED FOR CONSTRUCTION		

United Engineers & Constructors
A Raytheon Company
Rocky Flats Division
FOR
US DEPARTMENT OF ENERGY
IDAHO OPERATIONS OFFICE
IDAHO FALLS, IDAHO

ICPP CPP 604 AND 649
PWL COLLECTION SYSTEM
PUMP PAN ENCLOSURE
P&ID

WN
WL

INDEX CODE NUMBER				
AREA	DWG TYPE	CL	ORIG.	SERIAL
200	0649	24	812	368928

SIZE	INDEX CODE NUMBER AREA	DWG. TYPE	CL	ORIG	DRAWING NO.	REV.
D	200	0604	24	812	368928	8

SCALE NONE — SPEC CODE — A/E SHEET NO. P-010

ID: EEERKSN
Drawn in Model Space
Date: 02/02/04 - 11:00 AM.
File: 368928-8.dwg
Path: P:\As Building\JIM LAW
FORM INEL_D

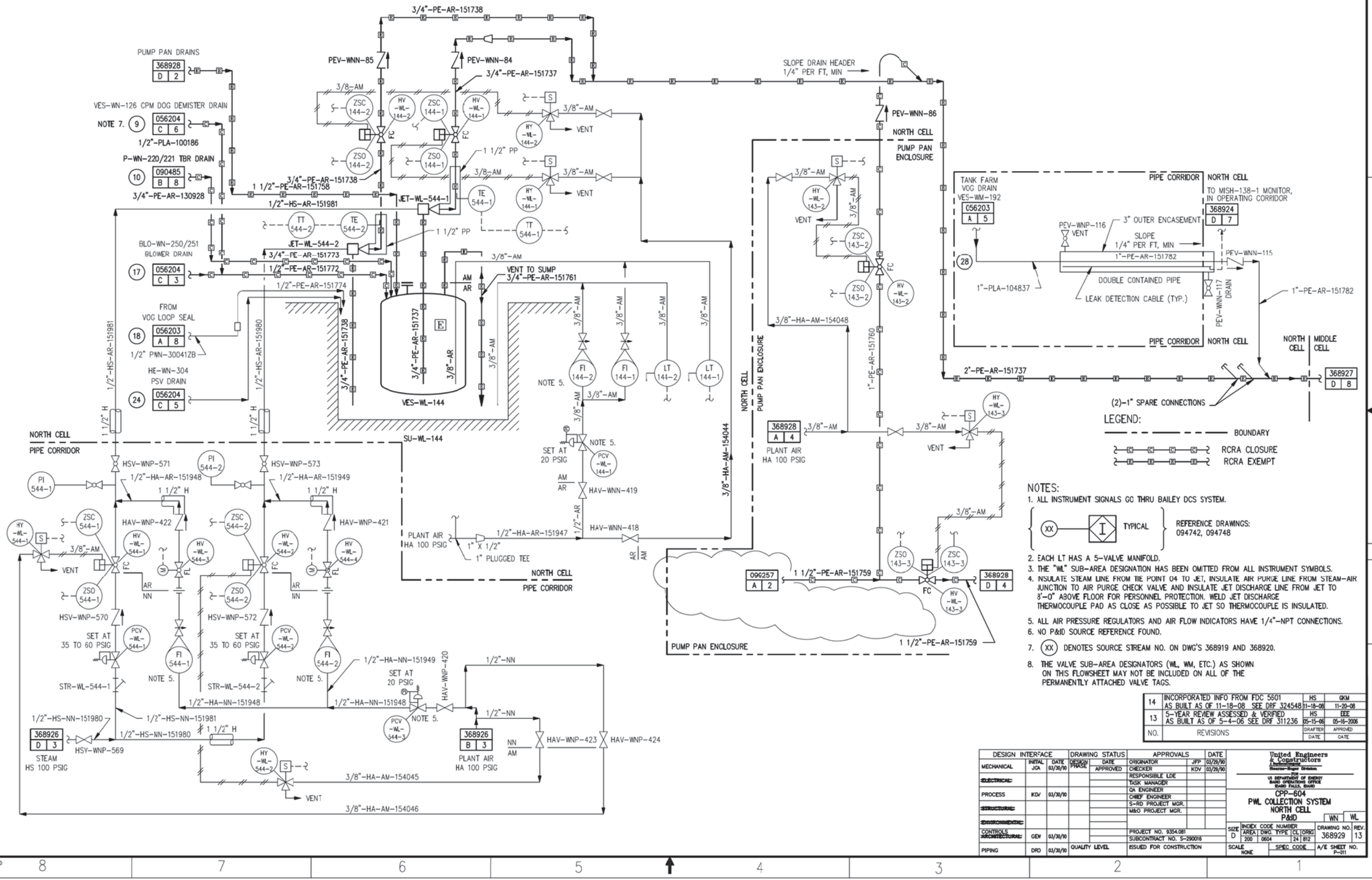
3/4"-PE-AR-151738
PUMP PAN DRAINS
368928 D 2
PEV-WNN-85
PEV-WNN-84
3/4"-PE-AR-151737
SLOPE DRAIN HEADER 1/4" PER FT, MIN
VES-WN-126 CPM DOG DEMISTER DRAIN
NOTE 7. 9 056204 C 6
1/2"-PLA-100186
P-WN-220/221 TBR DRAIN
10 090485 B 8
3/4"-PE-AR-130928
1 1/2"-PE-AR-151758
1/2"-HS-AR-151981
JET-WL-544-1
JET-WL-544-2
BLO-WN-250/251 BLOWER DRAIN
17 056204 C 3
3/4"-PE-AR-151773
1/2"-PE-AR-151772
1/2"-PE-AR-151774
VENT TO SUMP 3/4"-PE-AR-151761
FROM VOG LOOP SEAL
18 056203 A 8
1/2" PWN-30041ZB
HE-WN-304 PSV DRAIN
24 056204 C 5
1/2"-HS-AR-151981
1/2"-HS-AR-151980
3/4"-PE-AR-151737
3/8"-AR
VES-WL-144
SU-WL-144
NOTE 5.
SET AT 20 PSIG
PCV -WL- 144-1
HAV-WNN-419
HAV-WNN-418
1/2"-HA-AR-151947
1" X 1/2"
1" PLUGGED TEE
PLANT AIR HA 100 PSIG
NORTH CELL PIPE CORRIDOR
HSV-WNP-571
HSV-WNP-573
1/2"-HA-AR-151948
1/2"-HA-AR-151949
HAV-WNP-422
HAV-WNP-421
HSV-WNP-570
HSV-WNP-572
STR-WL-544-1
STR-WL-544-2
1/2"-HA-NN-151949
1/2"-HA-NN-151948
HAV-WNP-420
1/2"-HS-NN-151980
1/2"-HS-NN-151981
368926 D 3
STEAM HS 100 PSIG
HSV-WNP-569
368926 B 3
HAV-WNP-423
HAV-WNP-424
3/8"-HA-AM-154045
3/8"-HA-AM-154046
3/8"-HA-AM-154044
NORTH CELL PUMP PAN ENCLOSURE
3/8"-HA-AM-154048
1"-PE-AR-151760
368928 A 4
PLANT AIR HA 100 PSIG
096257 A 2
1 1/2"-PE-AR-151759
368928 D 4
PUMP PAN ENCLOSURE
TANK FARM VOG DRAIN VES-WM-192
056203 A 5
28
1"-PLA-104837
PEV-WNP-116 VENT
3" OUTER ENCASEMENT
SLOPE 1/4" PER FT, MIN
1"-PE-AR-151782
DOUBLE CONTAINED PIPE
LEAK DETECTION CABLE (TYP.)
PEV-WNN-115
PEV-WNN-117 DRAIN
PIPE CORRIDOR NORTH CELL
TO MISH-138-1 MONITOR, IN OPERATING CORRIDOR
368924 D 7
NORTH CELL MIDDLE CELL
2"-PE-AR-151737
(2)-1" SPARE CONNECTIONS
368927 D 8
LEGEND:
BOUNDARY
RCRA CLOSURE
RCRA EXEMPT
NOTES:
1. ALL INSTRUMENT SIGNALS GO THRU BAILEY DCS SYSTEM.
XX I TYPICAL
REFERENCE DRAWINGS: 094742, 094748
2. EACH LT HAS A 5-VALVE MANIFOLD.
3. THE "WL" SUB-AREA DESIGNATION HAS BEEN OMITTED FROM ALL INSTRUMENT SYMBOLS.
4. INSULATE STEAM LINE FROM TIE POINT 04 TO JET, INSULATE AIR PURGE LINE FROM STEAM-AIR JUNCTION TO AIR PURGE CHECK VALVE AND INSULATE JET DISCHARGE LINE FROM JET TO 3'-0" ABOVE FLOOR FOR PERSONNEL PROTECTION. WELD JET DISCHARGE THERMOCOUPLE PAD AS CLOSE AS POSSIBLE TO JET SO THERMOCOUPLE IS INSULATED.
5. ALL AIR PRESSURE REGULATORS AND AIR FLOW INDICATORS HAVE 1/4"-NPT CONNECTIONS.
6. NO P&ID SOURCE REFERENCE FOUND.
7. (XX) DENOTES SOURCE STREAM NO. ON DWG'S 368919 AND 368920.
8. THE VALVE SUB-AREA DESIGNATORS (WL, WM, ETC.) AS SHOWN ON THIS FLOWSHEET MAY NOT BE INCLUDED ON ALL OF THE PERMANENTLY ATTACHED VALVE TAGS.
14 INCORPORATED INFO FROM FDC 5501 AS BUILT AS OF 11-18-08 SEE DRF 324548 HS GKM 11-18-08 11-20-08
13 5-YEAR REVIEW ASSESSED & VERIFIED AS BUILT AS OF 5-4-06 SEE DRF 311236 HS EEE 05-15-06 05-16-2006
NO. REVISIONS DRAFTER APPROVED DATE DATE
DESIGN INTERFACE
MECHANICAL JGA 03/30/90
ELECTRICAL
PROCESS KDV 03/30/90
STRUCTURAL
ENVIRONMENTAL
CONTROLS/ARCHITECTURAL GEW 03/30/90
PIPING DRO 03/30/90
DRAWING STATUS DESIGN PHASE DATE APPROVED
APPROVALS DATE
ORIGINATOR JFP 03/29/90
CHECKER KDV 03/29/90
RESPONSIBLE LDE
TASK MANAGER
QA ENGINEER
CHIEF ENGINEER
S-RD PROJECT MGR.
M&O PROJECT MGR.
PROJECT NO. 9354.081
SUBCONTRACT NO. S-290016
QUALITY LEVEL
ISSUED FOR CONSTRUCTION
United Engineers & Constructors
A Raytheon Company
Boston-Hingham Division
FOR US DEPARTMENT OF ENERGY IDAHO OPERATIONS OFFICE IDAHO FALLS, IDAHO
CPP-604
PWL COLLECTION SYSTEM NORTH CELL
P&ID
WN WL
SIZE D
INDEX CODE NUMBER AREA 200 DWG. TYPE 0604 CL 24 ORIG 812
DRAWING NO. 368929
REV. 13
SCALE NONE
SPEC CODE
A/E SHEET NO. P-011
FORM INEL_D
File: 368929-14.dwg
Path: K:\INTEC Misc Drafting\Contract DWGS\DRF-324548
Date: 11/20/08 - 3:19 PM
Layout Name: Model
ID: HSPENCER

(2)-1" SPARE CONNECTIONS

DRAIN HEADER

SEPARATION/ CONDENSATION CELL | EVAPORATION CELL

368927 D 2

1/2"-PE-AR-151763

2"-PE-AR-151736

PEV-WLC-75

PEW CONDENSATE RECYCLE

PEV-WLC-76

2"-PE-AR-151736

1/2"-PE-AR-151764

ZSC 145-1

HV -WL- 145-1

ZSC 146-1

HV -WL- 146-1

094276 A 5 SHT 1

3/8"-AM

ZSO 145-1

1/2"-PE-AR-151763

ZSO 146-1

1/2"-PE-AR-151764

OOS

TE 545-1

1 1/2" PP

TE 546-1

1 1/2" PP

1/2" X 3/8"

JET-WL-545

1/2" X 3/8"

JET-WL-546

FLEXIBLE HOSE

1/2"-HS-AR-151982

1/2"-PE-AR-151763

1/2"-HS-AR-151983

1/2"-PE-AR-151764

FLEXIBLE HOSE

SUMP PUMP

SOLENOID VENT

SEPARATION/ CONDENSATION CELL

PIPE CORRIDOR

SU-WL-145

ACCESS CORRIDOR

SEPARATION/ CONDENSATION CELL

PIPE CORRIDOR

SU-WL-146

ACCESS CORRIDOR

SEPARATION/ CONDENSATION CELL

AM AR

1/4"-AR

CELL WALL

1 1/2" H

HSV-WLP-543

1/2"-HA-AR-151953

1 1/2" H

HSV-WLP-546

1/2"-HA-AR-151955

PI 545-1

TT 545-1

OOS

FI 145-1

NOTE 6.

PI 546-1

TT 546-1

FI 146-1

NOTE 6.

HY -WL- 545-1

S

ZSC 545-1

HV -WL- 545-1

HV -WL- 545-2

HAV-WLP-384

3/8"-AM

PCV -WL- 145-1

NOTE 6.

SET AT 20 PSIG

HY -WL- 546-1

S

ZSC 546-1

HV -WL- 546-1

HV 546-2

HAV-WLP-389

PCV -WL- 146-1

NOTE 6.

SET AT 20 PSIG

VENT

FC

FL

M

ZSO 545-1

HSV-WLP-542

AR NN

HAV-WLP-387

1/2"-NN

3/8"-AM

HAV-WLP-386

LT 145-1

HY -WL- 145-1

ZSO 546-1

HSV-WLP-545

AR NN

HAV-WLP-392

1/2"-NN

3/8"-AM

HAV-WLP-391

LT 146-1

HY -WL- 146-1

SET AT 35 PSIG

PCV -WL- 545-1

1/2"-HA-NN-151953

FI 545-1

NOTE 6.

SET AT 20 PSIG

1/2"-HA-NN-151952

HAV-WLP-383

1/2"-NN

3/8"-AM

HAV-WLP-385

SET AT 35 PSIG

PCV -WL- 546-1

1/2"-HA-NN-151955

FI 546-1

NOTE 6.

SET AT 20 PSIG

1/2"-HA-NN-151954

HAV-WLP-388

1/2"-NN

HAV-WLP-390

STR-WL-545-1

1 1/2" H

1/2"-HS-NN-151982

NOTE 6.

PCV -WL- 545-2

STR-WL-546-1

1/2"-HS-NN-151983

NOTE 6.

PCV -WL- 546-2

NN AM

368926 C 3

STEAM HS 100 PSIG

HSV-WLP-541

368926 B 3

PLANT AIR HA 100 PSIG

368926 C 3

STEAM HS 100 PSIG

HSV-WLP-544

368926 B 3

PLANT AIR HA 100 PSIG

3/8"-AM

3/8"-AM

3/8"-HA-AM-1540S8

LEGEND:

BOUNDARY

RCRA CONTROLLED

RCRA EXEMPT

NOTES:

1. ALL INSTRUMENT SIGNALS GO THRU BAILEY DCS SYSTEM.

XX — I TYPICAL — REFERENCE DRAWINGS: 094793, 094794

2. EACH LT HAS A 5-VALVE MANIFOLD.
3. THE "WL" SUB-AREA DESIGNATION HAS BEEN OMITTED FROM ALL INSTRUMENT SYMBOLS.
4. ALL INSTRUMENT TUBING SHALL SPEC BREAK TO 1/4"-AR FOR CELL WALL PENETRATIONS.
5. ~~INSULATE STEAM LINE FROM TIE POINT 04 TO JET, INSULATE AIR PURGE LINE FROM STEAM AIR JUNCTION TO AIR PURGE CHECK VALVE AND INSULATE JET DISCHARGE LINE FROM JET TO 8' 0" ABOVE FLOOR FOR PERSONNEL PROTECTION. WELD JET DISCHARGE THERMOCOUPLE PAD AS CLOSE AS POSSIBLE TO JET SO THERMOCOUPLE IS INSULATED.~~
6. ALL AIR PRESSURE REGULATORS AND AIR FLOW INDICATORS HAVE 1/4"-NPT CONNECTIONS.
7. (XX) DENOTES SOURCE STREAM NO. ON DWG'S 368919 AND 368920.

NO.	REVISIONS	DRAFTER	APPROVED
		DATE	DATE
14	INCORPORATED INFO FROM FDC-10422 AS BUILT AS OF 10/08/15 SEE DRF-346816	JW 10-13-15	KK 10-14-15
13	INCORPORATED INFO FROM FDC 5773 AS BUILT AS OF 11-18-08 SEE DRF 324548	HS 11-18-08	GKM 11-20-08
12	AS-BUILT AS OF 06-26-2006 SEE DRF 312267	HS 6-26-06	EEE 07-06-2006
11	AS-BUILT AS OF 8-19-02 SEE DAR 94322	MEW 8-19-02	DEJ 8-20-02

DESIGN INTERFACE	INITIAL	DATE
MECHANICAL	JGA	03/30/90
~~ELECTRICAL~~		
PROCESS	KDV	03/30/90
~~STRUCTURAL~~		
~~ENVIRONMENTAL~~		
CONTROLS		
~~ARCHITECTURAL~~	GEW	03/30/90
PIPING	DRO	03/30/90

DRAWING STATUS	DATE
DESIGN PHASE	APPROVED
QUALITY LEVEL	ISSUED FOR CONSTRUCTION

APPROVALS		DATE
ORIGINATOR	JFP	03/29/90
CHECKER	KDV	03/29/90
RESPONSIBLE LDE	RLH	03/30/90
TASK MANAGER	KHH	03/30/90
QA ENGINEER	JRW	03/30/90
CHIEF ENGINEER	RVR	03/30/90
S-RD PROJECT MGR.	PAP	03/30/90
M&O PROJECT MGR.		
PROJECT NO. 9354.081		
SUBCONTRACT NO. S-290016		

INDEX CODE NUMBER				
AREA	DWG TYPE	CL	ORIG.	SERIAL
200	0649	24	812	368930

United Engineers & Constructors — A Northrop Grumman Company — Stearns-Roger Division — OGF WL

FOR US DEPARTMENT OF ENERGY IDAHO OPERATIONS OFFICE IDAHO FALLS, IDAHO

ICPP CPP 604 AND 649

PWL COLLECTION SYSTEM SEPARATION/CONDENSATION P&ID

SIZE	INDEX CODE NUMBER				DRAWING NO.	REV.
	AREA	DWG. TYPE	CL	ORIG		
D	200	0604	24	812	368930	14

SCALE NONE | SPEC CODE ISSCONST | A/E SHEET NO. P-012

FORM INEL_D

File: 368930-14.dwg Path: K:\0-Signoff\Checker Review\Keller_Kris\DRF-346816_Submitted for DRF Review Date: 10/13/15 - 2:06 PM Layout Name: Layout1 ID: WILLIT

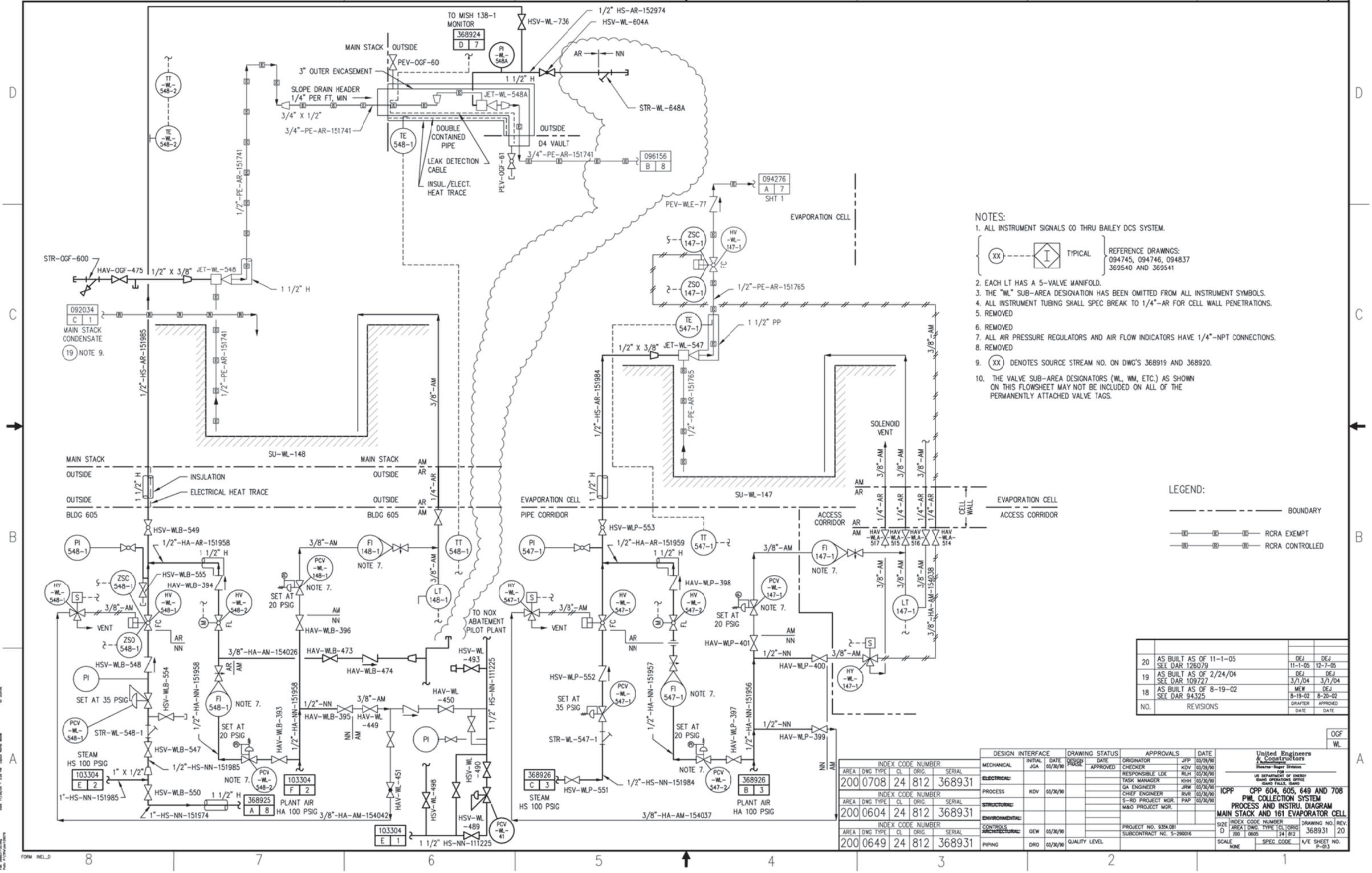

NOTES:

1. ALL INSTRUMENT SIGNALS GO THRU BAILEY DCS SYSTEM.

   (XX) — I — TYPICAL — REFERENCE DRAWINGS: 094745, 094746, 094837 369540 AND 369541

2. EACH LT HAS A 5-VALVE MANIFOLD.
3. THE "WL" SUB-AREA DESIGNATION HAS BEEN OMITTED FROM ALL INSTRUMENT SYMBOLS.
4. ALL INSTRUMENT TUBING SHALL SPEC BREAK TO 1/4"-AR FOR CELL WALL PENETRATIONS.
5. REMOVED
6. REMOVED
7. ALL AIR PRESSURE REGULATORS AND AIR FLOW INDICATORS HAVE 1/4"-NPT CONNECTIONS.
8. REMOVED
9. (XX) DENOTES SOURCE STREAM NO. ON DWG'S 368919 AND 368920.
10. THE VALVE SUB-AREA DESIGNATORS (WL, WM, ETC.) AS SHOWN ON THIS FLOWSHEET MAY NOT BE INCLUDED ON ALL OF THE PERMANENTLY ATTACHED VALVE TAGS.

LEGEND:

- BOUNDARY
- RCRA EXEMPT
- RCRA CONTROLLED

NO.	REVISIONS	DRAFTER DATE	APPROVED DATE
20	AS BUILT AS OF 11-1-05 SEE DAR 126079	DEJ 11-1-05	DEJ 12-7-05
19	AS BUILT AS OF 2/24/04 SEE DAR 109727	DEJ 3/1/04	DEJ 3/1/04
18	AS BUILT AS OF 8-19-02 SEE DAR 94325	MEW 8-19-02	DEJ 8-20-02

OGF
WL

INDEX CODE NUMBER	AREA	DWG TYPE	CL	ORIG.	SERIAL
	200	0708	24	812	368931
	200	0604	24	812	368931
	200	0649	24	812	368931

DESIGN INTERFACE			DRAWING STATUS	APPROVALS		DATE
MECHANICAL	JGA	03/30/90	DESIGN PHASE: APPROVED	ORIGINATOR	JFP	03/29/90
~~ELECTRICAL~~				CHECKER	KDV	03/29/90
PROCESS	KDV	03/30/90		RESPONSIBLE LDE	RLH	03/30/90
~~STRUCTURAL~~				TASK MANAGER	KHH	03/30/90
~~ENVIRONMENTAL~~				QA ENGINEER	JRW	03/30/90
~~CONTROLS~~				CHIEF ENGINEER	RVR	03/30/90
~~ARCHITECTURAL~~	GEW	03/30/90		S-RD PROJECT MGR.	PAP	03/30/90
PIPING	DRO	03/30/90	QUALITY LEVEL	M&O PROJECT MGR.		
				PROJECT NO. 9354.081		
				SUBCONTRACT NO. S-290016		

United Engineers & Constructors
A Northrop Grumman Shipbuilding Division
FOR THE US DEPARTMENT OF ENERGY IDAHO OPERATIONS OFFICE IDAHO FALLS, IDAHO

ICPP CPP 604, 605, 649 AND 708
PWL COLLECTION SYSTEM
PROCESS AND INSTRU. DIAGRAM
MAIN STACK AND 161 EVAPORATOR CELL

SIZE	INDEX CODE NUMBER AREA	DWG. TYPE	CL	ORIG	DRAWING NO.	REV.
D	200	0605	24	812	368931	20

SCALE NONE — SPEC CODE — A/E SHEET NO. P-013

FORM INEL_D

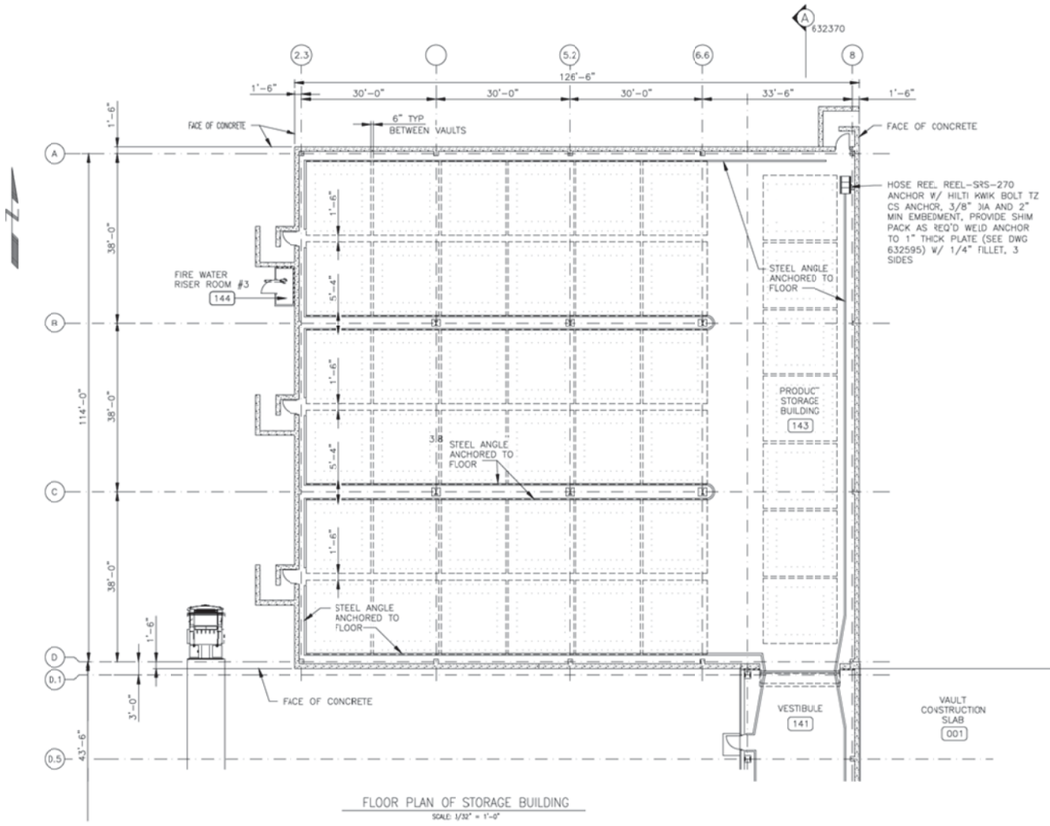

FLOOR PLAN OF STORAGE BUILDING

SCALE: 1/32" = 1'-0"

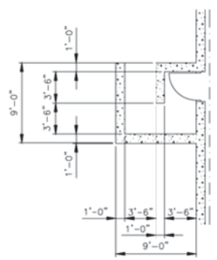

ENLARGED PLAN AT LABYRINTH

SCALE: 3/16" = 1'-0"

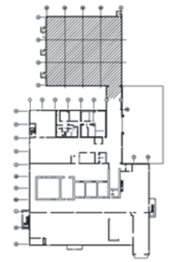

KEY PLAN

NOTES

1. ONLY DETAILS PERTAINING TO EXTERIOR WALL PANELS, ROOF PANELS AND EXTERIOR DOORS ARE QL-3. ALL OTHER ARCHITECTURAL ELEMENTS ARE QL-4.

REV	DESCRIPTION
4	AS BUILT AS OF 10/12/11
	SEE DRF-334541
3	SEE DRF-329778 INITIAL RELEASE

REVISION HISTORY

SCALE: 3/32" = 1'-0"

SCALE: 3/16" = 1'-0"

DESIGN PHASE:	
QUALITY LEVEL:	SEE NOTE 1
HORIZONTAL SCALE	NOTED
VERTICAL SCALE	NA
FOR DRAWING INDEX SEE DRAWING NO.	632160
SIGNATURES/DATES APPLY TO CURRENT RELEASE ONLY	SIGN AND DATE
DESIGN: NA	
DRAFTER: A. KEY	
TECHNICAL CHECK: NA	
ENG GROUP SUPERVISOR: NA	
DESIGN LEAD: NA	
DRAFTING CHECK/ EFFECTIVE DATE: K. KELLER	

Idaho Cleanup Project

CPP-1696
INTEGRATED WASTE TREATMENT UNIT
ARCHITECTURAL
GENERAL ARRANGEMENTS
PRODUCT STORAGE BUILDING
FLOOR PLAN

PROJECT NUMBER: 25051

SCALE	INDEX	CODE	SIZE	DWG
200	1696	00	136	

SIZE E DWG 632359 REV 4

DRF NO. --- SHEET A-9

File: 632359-4.dwg Date: 10/12/11 - 5:10 PM Layout Name: Size
Path: V:_Vault\Designs\WTS\STATE AS BUILT 10-14-2011\DRF-334541 © KEYAL

FMT-E1-REV 4.2

P-SRC-231 WASTE FEED PUMP
VES-SRC-131 WASTE FEED TANK
JET-SRC-532 WASTE MIXING EDUCTOR
JET-SRC-533 WASTE FEED PUMP PRIMING EJECTOR
HTR-SRB-365 FLUIDIZING GAS SUPERHEATER
VES-SRC-140 DENITRATION/MINERALIZATION REFORMER
F-SRC-153 PROCESS GAS FILTER
VES-SRC-160 CARBON REDUCTION REFORMER
COL-SRC-160 OFF-GAS COOLER
F-SRC-160 OFF-GAS FILTER
BLO-SRH-260-A/-B SBW OFF-GAS BLOWERS

REVISIONS	
REV	DESCRIPTION
8	SEE DRF-331463, INITIAL RELEASE, PRIOR HISTORY REMOVED, COMBINED INDIVIDUAL FILES INTO MAIN FILE
9	DELETED SHEET 2 SEE DRF-333117
10	REVISED TITLEBLOCK SEE DRF-334594

NOTES

1. FLOW RATE IS THE TOTAL FLOW THROUGH ALL INJECTORS.
2. DELETED.
3. BACK ARROWS ORIGINATE OUTSIDE THE SHIELDING ENCLOSURE.
4. SEE HVAC DRAWINGS FOR ENCLOSURE VENTILATION.
5. DELETED.
6. DELETED.
7. DELETED.
8. DELETED.
9. DELETED.
10. DELETED.
11. DELETED
12. DELETED.
13. DELETED.
14. NITROGEN CONSUMPTION BASIS TAKEN FROM CALC 28276-21-097, REV. 2.
15. DELETED.
16. MASS BALANCE BASIS FROM CALC 28276-21-001, REV. 4. TEMPERATURE AND PRESSURE PROFILES HAVE BEEN MODIFIED TO MATCH PHYSICAL DESIGN AND PIPING HEAT TRANSFER CALCULATIONS.
17. DELETED.
18. TEMPERATURES IN TABLE REPRESENT AVERAGE VALUES.
19. NITROGEN FOR SOLID TRANSFER REPRESENTS THE AVERAGE FLOWRATE FOR EACH AREA.
20. THE VALUES SHOWN ON THIS DRAWING ARE CALCULATED VALUES BY WGI-DENVER FOR REFERENCE ONLY. ACTUAL VALUES WILL BE OBTAINED AT A LATER DATE DURING OPERATIONS.
21. THE FLOW PATHS ON THIS DRAWING HAVE BEEN VERIFIED TO BE AS-BUILT BY THE IWTU DESIGN AUTHORITY GROUP. FLOWRATES SHOWN ARE DESIGN VALUES AND HAVE NOT BEEN AS-BUILT.
22. THE QUALITY LEVEL AND ASSOCIATED QUALITY LEVEL DETERMINATION FOR EQUIPMENT, INSTRUMENTS, AND COMPONENTS ON THIS DRAWING ARE IDENTIFIED ON THE "IWTU PROJECT EQUIPMENT LIST" AS MAINTAINED UNDER MCP-3350, DATA MANAGEMENT OF CONFIGURATION MANAGED FIELDS IN THE IWTU PROJECT EQUIPMENT LIST.

STREAM NUMBER / STREAM NAME	UNITS	1 WASTE TO WASTE FEED TANK	2 WASTE FROM WASTE FEED PUMP	3 RECIRC'D WASTE	4 WASTE FEED TO DMR	5 WASTE FEED TANK VENT	7 AIR TO DMR (NAR GAS)	8 NITROGEN TO DMR (NAR GAS)	9 FB MEDIA TO DMR	10 COAL TO DMR	11 NITROGEN TO FG SUPERHTR	12 OXYGEN TO DMR
VARIABLE	UNITS											
PRESSURE	psia	23.05	62.38	59.38	21.48	12.38	81.20	81.20	21.48	21.48	28.51	23.51
TEMPERATURE, NOTE 18	deg. C	20	20	20	20	20	20	20	20	20	20	20
TOTAL MASS FLOW	LB/HR	1591.03	19,943.2	18,352.1	1591.03	17.70	525.37	0.00	0.00	270.57	0.00	1.03
LIQUID MASS FLOW	LB/HR	1565.77	19,626.5	18,060.8	1565.77	0.00	0.00	0.00	0.00	0.00	0.00	0.00
VOLUME FLOW	gpm	2.5	30.68	28.23	2.5	---	---	---	---	---	---	---
SPEC. GRAVITY		1.28	1.28	1.28	1.28	---	---	---	---	---	---	---
GAS MASS FLOW	LB/HR	0.00	0.00	0.00	0.00	17.70	525.37	0.00	0.00	0.00	0.00	1.03
AVG. MOLE. WT.		---	---	---	---	28.00	29.00	28.00	---	---	28.00	32
GAS VOL. FLOW	ACFM	0.00	0.00	0.00	0.00	4.82	21.07	0.00	0.00	0.00	0.00	0.13
GAS VOL. FLOW	SCFM	0.00	0.00	0.00	0.00	4.00	114.56	0.00	0.00	0.00	0.00	0.26
SOLID MASS FLOW	LB/HR	25.26	316.63	291.37	25.26	0.00	0.00	0.00	0.00	270.57	0.00	0.00
RADIONUCLIDE BAL.												
Cs-137	Ci/hr	2.58E+01	3.24E+02	2.98E+02	2.58E+01	0.00	0.00	0.00	0.00	0.00	0.00	0.00
Sr-90	Ci/hr	1.69E+01	2.12E+02	1.95E+02	1.69E+01	0.00	0.00	0.00	0.00	0.00	0.00	0.00
Pu-238	Ci/hr	5.54E-01	6.94E+00	6.39E+00	5.54E-01	0.00	0.00	0.00	0.00	0.00	0.00	0.00
Pu-239	Ci/hr	6.01E-02	7.53E-01	6.93E-01	6.01E-02	0.00	0.00	0.00	0.00	0.00	0.00	0.00
Am-241	Ci/hr	4.69E-02	5.88E-01	5.41E-01	4.69E-02	0.00	0.00	0.00	0.00	0.00	0.00	0.00
Pu-240	Ci/hr	2.23E-02	2.79E-01	2.57E-01	2.23E-02	0.00	0.00	0.00	0.00	0.00	0.00	0.00
U-234	Ci/hr	7.99E-04	1.00E-02	9.22E-03	7.99E-04	0.00	0.00	0.00	0.00	0.00	0.00	0.00
U-238	Ci/hr	1.92E-05	2.41E-04	2.21E-04	1.92E-05	0.00	0.00	0.00	0.00	0.00	0.00	0.00
Pu-242	Ci/hr	1.15E-05	1.44E-04	1.32E-04	1.15E-05	0.00	0.00	0.00	0.00	0.00	0.00	0.00
U-233	Ci/hr	5.02E-06	6.29E-05	5.79E-05	5.02E-06	0.00	0.00	0.00	0.00	0.00	0.00	0.00

STREAM NUMBER / STREAM NAME	UNITS	13 STEAM TO FG SUPERHTR	14 FLUIDIZING GAS TO DMR	15 SOLIDS FROM DMR	17 DMR GAS TO PGF	18 SOLIDS FROM PGF	19 PGF GAS TO CRR	20 FB MEDIA TO CRR	21 CARBON TO CRR	22 ALUMINUM HYDROXIDE TO CRR	24 AIR TO CRR	25 OXYGEN TO CRR
VARIABLE	UNITS											
PRESSURE	psia	28.51	23.51	24.00	19.34	19.31	18.50	13.55	13.55	13.55	23.55	23.55
TEMPERATURE, NOTE 18	deg. C	219	560	640	629	554	554	20	20	20	20	20
TOTAL MASS FLOW	LB/HR	1277.43	1278.46	243.59	3625.84	11.04	4003.30	0.73	122.30	4.84E-02	760.25	505.91
LIQUID MASS FLOW	LB/HR	0.00	0.00	0.00	0.00	0.00	0.00	0.00	0.00	0.00	0.00	0.00
VOLUME FLOW	gpm	---	---	---	---	---	---	---	---	---	---	---
SPEC. GRAVITY		---	---	---	---	---	---	---	---	---	---	---
GAS MASS FLOW	LB/HR	1277.43	1278.46	0	3614.79	0	4003.29	0	0	0	760.25	505.91
AVG. MOLE. WT.		18.00	18.01	---	21.28	---	21.73	---	---	---	29.00	32
GAS VOL. FLOW	ACFM	394.50	810.12	0.00	2551.25	0.00	2652.62	0.00	0.00	0.00	105.11	63.39
GAS VOL. FLOW	SCFM	448.79	448.99	0.00	1074.24	0.00	1165.27	0.00	0.00	0.00	165.78	99.98
SOLID MASS FLOW	LB/HR	0.00	0.00	243.59	11.05	11.04	1.11E-02	0.73	122.3	4.84E-02	0.00	0.00
RADIONUCLIDE BAL.												
Cs-137	Ci/hr	0.00	0.00	2.47E+01	1.30E+00	1.30E+00	1.30E-03	0.00	0.00	0.00	0.00	0.00
Sr-90	Ci/hr	0.00	0.00	1.62E+01	8.50E-01	8.50E-01	8.50E-04	0.00	0.00	0.00	0.00	0.00
Pu-238	Ci/hr	0.00	0.00	5.29E-01	2.78E-02	2.78E-02	2.78E-05	0.00	0.00	0.00	0.00	0.00
Pu-239	Ci/hr	0.00	0.00	5.74E-02	3.02E-03	3.02E-03	3.02E-06	0.00	0.00	0.00	0.00	0.00
Am-241	Ci/hr	0.00	0.00	4.48E-02	2.36E-03	2.36E-03	2.36E-06	0.00	0.00	0.00	0.00	0.00
Pu-240	Ci/hr	0.00	0.00	2.13E-02	1.12E-03	1.12E-03	1.12E-06	0.00	0.00	0.00	0.00	0.00
U-234	Ci/hr	0.00	0.00	7.63E-04	4.02E-05	4.01E-05	4.02E-08	0.00	0.00	0.00	0.00	0.00
U-238	Ci/hr	0.00	0.00	1.83E-05	9.65E-07	9.64E-07	9.65E-10	0.00	0.00	0.00	0.00	0.00
Pu-242	Ci/hr	0.00	0.00	1.09E-05	5.76E-07	3.75E-07	5.76E-10	0.00	0.00	0.00	0.00	0.00
U-233	Ci/hr	0.00	0.00	4.80E-06	2.52E-07	2.52E-07	2.52E-10	0.00	0.00	0.00	0.00	0.00

STREAM NUMBER / STREAM NAME	UNITS	26 TREATED WATER TO CRR	27 NITROGEN TO CRR (PROCESS GAS)	28 CRR GAS TO COOLER	29 OGC GAS TO OGF	30 NITROGEN TO OGC (PROCESS)	31 TREATED WATER TO OGC	32 SOLIDS FROM OGF	33 OGF GAS TO BLOWER	34 SBW OFFGAS BLOWER OUTLET	35-1 AVG. TOTAL SOLIDS TO PRCA	52 PRF/PHVF TO OGF	104 ALUMINA SEED PARTICLES TO DMR
VARIABLE	UNITS												
PRESSURE	psia	23.34	23.55	10.65	10.54	137.38	137.38	10.43	9.42	12.09	20.20	10.36	21.48
TEMPERATURE, NOTE 18	deg. C	20	20	920	160	20	20	[illegible]	[illegible]	183	450	199	20
TOTAL MASS FLOW	LB/HR	0.00	0.00	5447.44	8457.21	442.80	2468.67	9.38	10,185.4	10,185.4	554.47	1816.36	0.00
LIQUID MASS FLOW	LB/HR	0.00	0.00	0.00	0.00	0.00	2468.67	0.00	0.00	0.00	0.00	0.00	0.00
VOLUME FLOW	gpm	0.00	---	---	---	---	4.94	---	---	---	---	---	---
SPEC. GRAVITY		1.00	---	---	---	---	1.00	---	---	---	---	---	---
GAS MASS FLOW	LB/HR	0	0	5438.01	8447.78	442.80	0	0	10,185.3	10,185.3	290.45	1816.35	0.00
AVG. MOLE. WT.		---	28	23.99	22.05	28.00	---	---	22.86	22.86	28.00	28.00	---
GAS VOL. FLOW	ACFM	0.00	0.00	8175.22	5070.00	10.87	0.00	0.00	[illegible]	5413.74	119.57	431.23	0.00
GAS VOL. FLOW	SCFM	0.00	0.00	1433.33	2422.62	100.01	0.00	0.00	[illegible]	[illegible]	65.60	365.05	0.00
SOLID MASS FLOW	LB/HR	0.00	0	9.43	9.43	0.00	0.00	9.38	4.72E-02	4.72E-02	264.03	1.10E-02	0.00
RADIONUCLIDE BAL.													
Cs-137	Ci/hr	0.00	0.00	1.30E-03	1.30E-03	0.00	0.00	1.29E-03	[illegible]	6.50E-06	2.60E+01	[illegible]	0.00
Sr-90	Ci/hr	0.00	0.00	8.50E-04	8.50E-04	0.00	0.00	8.47E-04	[illegible]	4.28E-06	1.70E+01	[illegible]	0.00
Pu-238	Ci/hr	0.00	0.00	2.78E-05	2.78E-05	0.00	0.00	[illegible]	[illegible]	[illegible]	[illegible]	[illegible]	0.00
Pu-239	Ci/hr	0.00	0.00	3.02E-06	3.02E-06	0.00	0.00	[illegible]	[illegible]	[illegible]	6.04E-02	[illegible]	0.00
Am-241	Ci/hr	0.00	0.00	2.36E-06	2.36E-06	0.00	0.00	[illegible]	[illegible]	1.18E-08	4.72E-02	[illegible]	0.00
Pu-240	Ci/hr	0.00	0.00	1.12E-06	1.12E-06	0.00	0.00	[illegible]	5.61E-09	5.61E-09	2.24E-02	[illegible]	0.00
U-234	Ci/hr	0.00	0.00	4.02E-08	4.02E-08	0.00	0.00	[illegible]	[illegible]	[illegible]	8.04E-04	[illegible]	0.00
U-238	Ci/hr	0.00	0.00	9.65E-10	9.65E-10	0.00	0.00	[illegible]	[illegible]	[illegible]	1.93E-05	[illegible]	0.00
Pu-242	Ci/hr	0.00	0.00	5.76E-10	5.76E-10	0.00	0.00	5.74E-10	[illegible]	2.88E-12	1.15E-05	[illegible]	0.00
U-233	Ci/hr	0.00	0.00	2.52E-10	2.52E-10	0.00	0.00	[illegible]	[illegible]	[illegible]	5.05E-06	[illegible]	0.00

David E. Keller
CWI
2011.10.[illegible] 06'00'
PROFESSIONAL ENGINEER REGISTERED 10196 STATE OF IDAHO DAVID E. KELLER

SIGNATURES/DATES APPLY TO CURRENT RELEASE ONLY	SIGN AND DATE
DESIGN: D. KELLER, P.E.	
DRAFTER: A. KEY	
TECHNICAL CHECK: J. KLINGER, P.E.	
ENG GROUP SUPERVISOR: R. EASTMAN, P.E.	
DESIGN LEAD: D. CLARK, P.E.	
DRAFTING CHECK/EFFECTIVE DATE: G. MACE	
PROJECT NUMBER: 25051	
DRF NUMBER: ---	

Idaho Cleanup Project CH2M-WG Idaho, LLC

INTEC CPP-1696
INTEGRATED WASTE TREATMENT UNIT
PROCESS FLOW DIAGRAM
SODIUM BEARING WASTE TREATMENT
CARBONATE HS CASE

SIZE	AREA	TYPE	DISC	DWG-	REV
E	200	1696	24	136	632750	10

SCALE: NONE SHEET 1 OF 1

File: 632750-10.dwg Date: 10/13/11 - 11:35 AM Layout Name: SHEET 1 © KEYAL
Path: V:_Vault\Designs\IWTU\STATE AS BUILT 10-14-2011\DRF-334594

REVISIONS	
REV	DESCRIPTION
8	INITIAL RELEASE, PRIOR HISTORY REMOVED DELETED SHEET 2, SEE DRF-333118
9	SEE DRF-334594

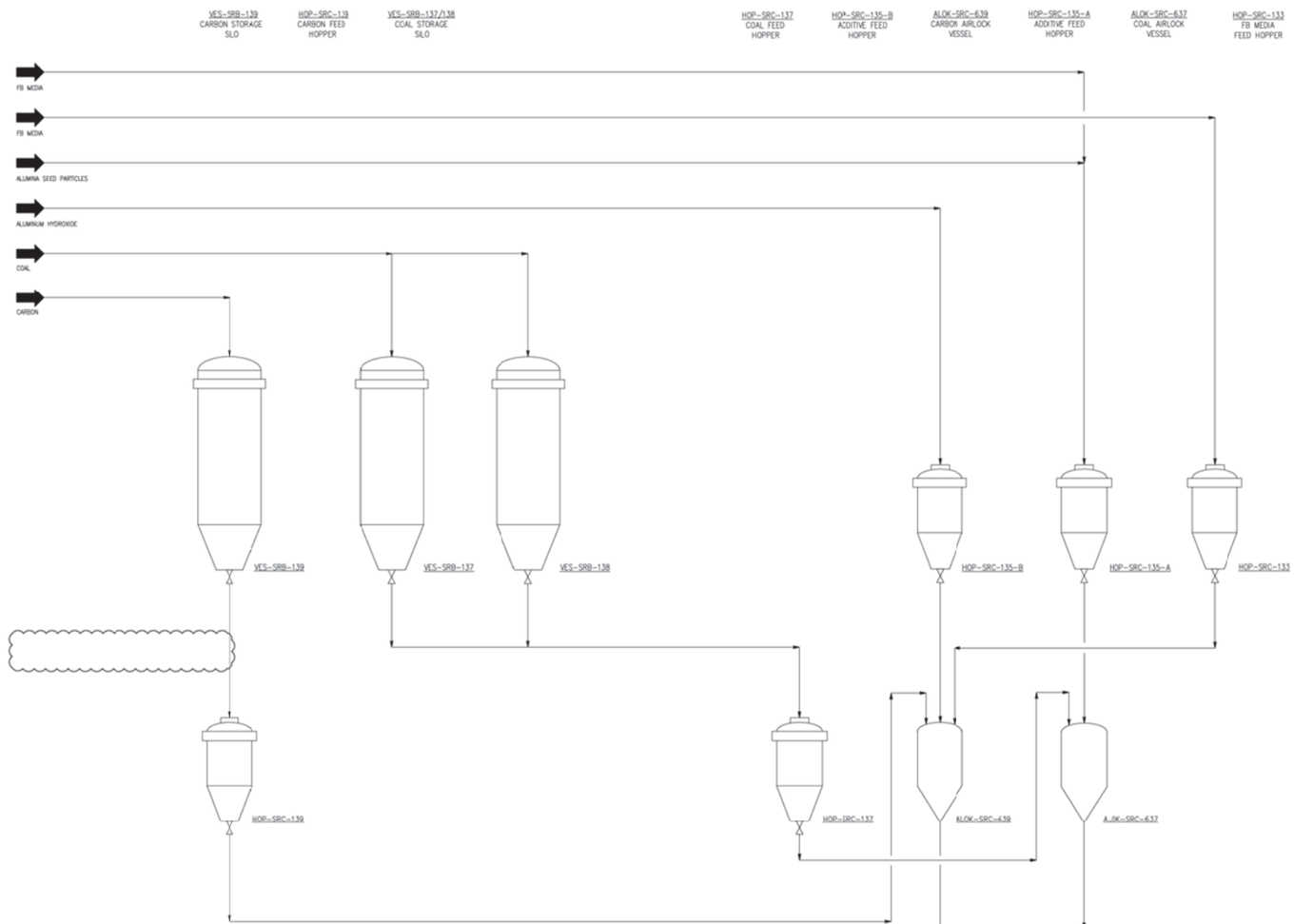

Stream Number		9	10	20	21	22	104
Stream Name		FB Media to DMR	Coal to DMR	FB Media to CRR	Carbon to CRR	Aluminum Hydroxide to CRR	Alumina Seed Particles to DMR
VARIABLE	UNITS						
Pressure	psia	21.48	21.48	13.55	13.55	13.55	21.48
Temperature, NOTE 5	deg C	20	20	20	20	20	20
Total Mass Flow	LB/HR	0.00	270.57	0.73	122.30	4.84E-02	0.00
Liquid Mass Flow	LB/HR	0.00	0.00	0.00	0.00	0.00	0.00
Volume Flow	gpm	---	---	---	---	---	---
Spec. Gravity		---	---	---	---	---	---
Gas Mass Flow	LB/HR	0.00	0.00	0	0	0	0.00
Avg. Mole. Wt.		---	---	---	---	---	---
Gas Vol. Flow	ACFM	0.00	0.00	0.00	0.00	0.00	0.00
Gas Vol Flow	SCFM	0.00	0.00	0.00	0.00	0.00	0.00
Solid Mass Flow	LB/HR	0.00	270.57	0.73	122.3	4.84E-02	0.00

NOTES

1. DELETED.
2. NITROGEN CONSUMPTION BASIS TAKEN FROM CALC. 28276-21-097, REV. 2.
3. MASS BALANCE BASIS FROM CALC. 28276-21-001, REV. 4. TEMPERATURE AND PRESSURE PROFILES HAVE BEEN MODIFIED TO MATCH PHYSICAL DESIGN AND PIPING HEAT TRANSFER CALCULATIONS.
4. DELETED.
5. TEMPERATURES IN TABLE REPRESENT AVERAGE VALUES.
6. THE FLOW PATHS ON THIS DRAWING HAVE BEEN VERIFIED TO BE AS-BUILT BY THE IWTU DESIGN AUTHORITY GROUP. FLOWRATES SHOWN ARE DESIGN VALUES AND HAVE NOT BEEN AS-BUILT.
7. THE QUALITY LEVEL AND ASSOCIATED QUALITY LEVEL DETERMINATION FOR EQUIPMENT, INSTRUMENTS, AND COMPONENTS ON THIS DRAWING ARE IDENTIFIED ON THE "IWTU PROJECT EQUIPMENT LIST" IS MAINTAINED UNDER MCP-3350, DATA MANAGEMENT OF CONFIGURATION MANAGED FIELDS IN THE IWTU PROJECT EQUIPMENT LIST.

David E. Keller
CWI
2011.10.13 14:25:14 -06'00'
PROFESSIONAL ENGINEER
10196
STATE OF IDAHO
DAVID E. KELLER

SIGNATURES/DATES APPLY TO CURRENT RELEASE ONLY	SIGN AND DATE
DESIGN: D. KELLER, P.E.	David E Keller CWI 2011.10.13 14:25:14 -06'00'
DRAFTER: A. KEY	Joseph Key 2011.10.13 14:22:03 -06'00'
TECHNICAL DATA: S. KLINGER, P.E.	Jeffrey B Klinger 2011.10.13 12:39:28 -06'00'
ENG GROUP SUPERVISOR: R. EASTMAN, P.E.	Richard A Eastman 2011.10.13 13:00:21 -06'00'
DESIGN LEAD: D. CLARK, P.E.	David E. Keller CWI 2011.10.13 14:25:14 -06'00'
DRAFTING CHECK/EFFECTIVE DATE: S. MACE	Jason Mace 2011.10.13 14:27:11 -06'00'
PROJECT NUMBER: 25051	
DRF NUMBER: ---	

Idaho Cleanup Project

INTEC CPP-1696
INTEGRADED WASTE TREATMENT UNIT
PROCESS FLOW DIAGRAM
ADDITIVE FEED
CARBONATE HS CASE

SIZE	DOCK CODE	NUMBER	DWG-	REV
E	CPO	1696	24 139	9
SCALE: NONE			SHEET 1 OF 1	

© KEMI

File: 632752-9.dwg Date: 10/13/11 - 12:05 PM Layout: Normal(Port)
Path: V:\New\Designs\Drawings\AS BUILT 10-14-2011\DRF-334594

REVISIONS	
REV	DESCRIPTION
8	INITIAL RELEASE, PRIOR HISTORY REMOVED, DELETED SHEET 2, SEE DRF-333118
9	SEE DRF-334594

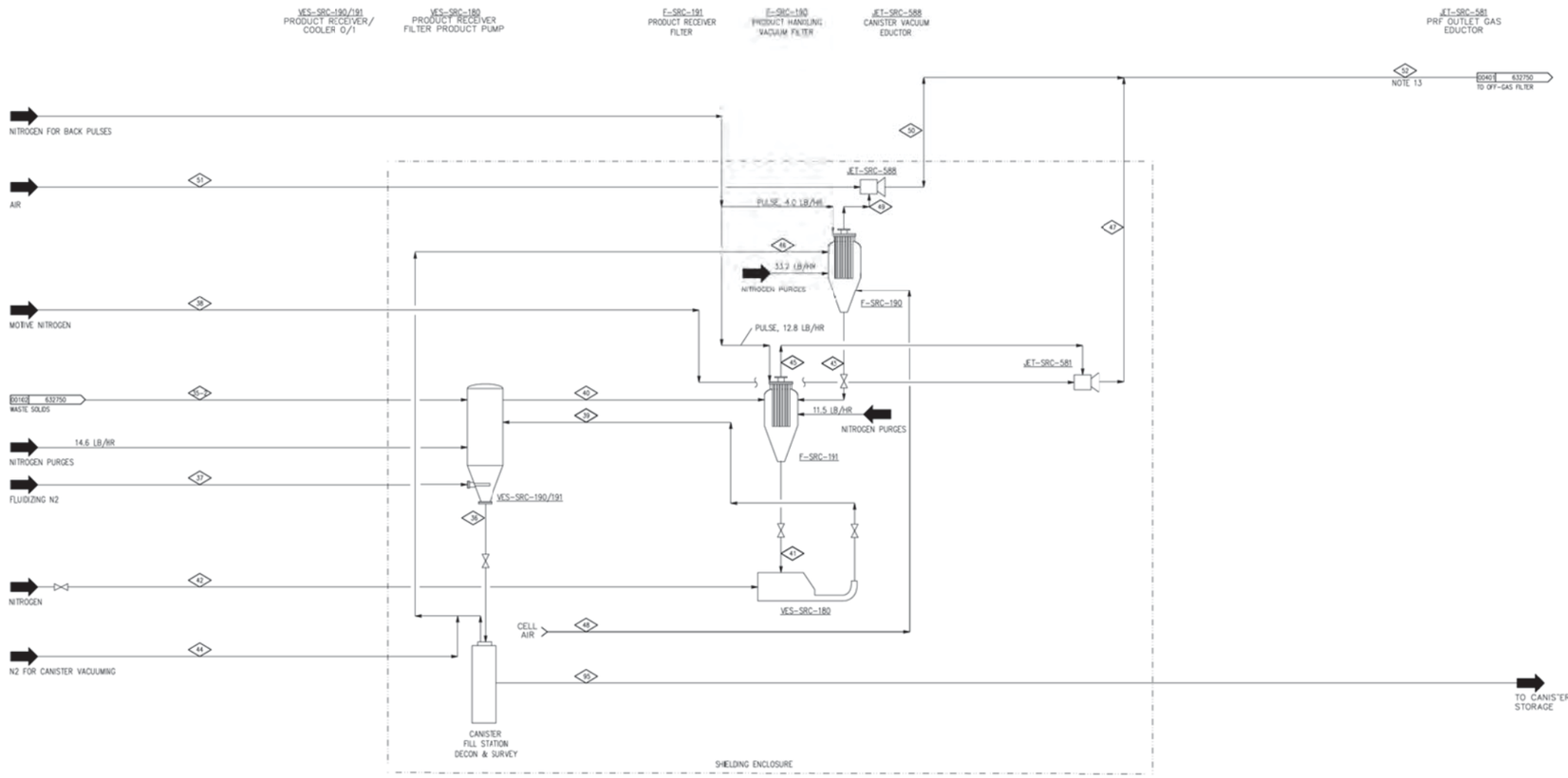

NOTES

1. DELETED.
2. DELETED.
3. SEE HVAC DRAWINGS FOR ENCLOSURE VENTILATION.
4. DELETED.
5. DELETED.
6. DELETED.
7. DELETED.
8. NITROGEN CONSUMPTION BASIS TAKEN FROM CALC. 28276-21-097, REV. 2.
9. DELETED.
10. MASS BALANCE BASIS FROM CALC 28276-21-001, REV. 4. TEMPERATURE AND PRESSURE PROFILES HAVE BEEN MODIFIED TO MATCH PHYSICAL DESIGN AND PIPING HEAT TRANSFER CALCULATIONS.
11. DELETED.
12. ALL FLOWS SHOWN ARE INSTANTANEOUS, EXCEPT FOR THE SOLIDS FLOWRATES (STREAMS 35, 36, 39, 41 & 95), WHICH ARE AVERAGES.
13. THE MAIN TABLE REPRESENTS DWR SOLID TRANSFER, DESIGNATED AS CASE "A". THERE IS NO SIMULTANEOUS CANISTER FILLING, VENTING NOR VACUUMING OCCURRING FOR THIS CASE AND THOSE FLOWS ARE REPRESENTED ACCORDINGLY. 5 ADDITIONAL CASES ARE DESCRIBED BELOW. SELECTED STREAMS DEEMED SIGNIFICANT FOR THESE CASES ARE SHOWN IN CALC 28276-21-061, REV. 2. CASES B, D, E AND F ARE CONSIDERED NORMAL OPERATION CASES WITH INTERMITTENT OPERATION. CASE C IS CONSIDERED AN UPSET CONDITION AND WILL ONLY OCCUR IN AN EMERGENCY SCENARIO.

   CASE B – ODF SOLID TRANSFER:
   FOR THIS CASE, THERE IS MOTIVE N2 FLOW TO JET-SRC-581; NO FLUIDIZING FLOW TO THE PRC; AND NO CANISTER FILLING/ VENTING OR VACUUMING.

   CASE C – PRC SOLID TRANSFER:
   SOLIDS ARE VACUATED FROM THE PRC; THERE IS N2 MOTIVE FLOW TO JET-SRC-581; AND THERE IS NO FLUIDIZING FLOW TO PRC.

   CASE D – CANISTER VACUUM:
   THIS CASE REPRESENTS NEEDING TO VACUUM OUT SOLIDS FROM A CANISTER.

   CASE E – HOOD VENTILATION:
   THIS CASE SHOWS THE CASE WHERE THE HOOD VENTILATION SYSTEM IS RUNNING.

   CASE F – CANISTER FILLING:
   THIS CASE SHOWS DRAINING OF SOLIDS FROM THE PRC INTO A CANISTER USING TRANSFLOW AND NITROGEN.
14. THE FLOW PATHS ON THIS DRAWING HAVE BEEN VERIFIED TO BE AS-BUILT BY THE INTU DESIGN AUTHORITY GROUP. THE FLOWRATES SHOWN ARE DESIGN VALUE AND HAVE NOT BEEN AS-BUILT.
15. THE QUALITY LEVEL AND ASSOCIATED QUALITY LEVEL DETERMINATION FOR EQUIPMENT, INSTRUMENTS, AND COMPONENTS ON THIS DRAWING ARE IDENTIFIED ON THE "INTU PROJECT EQUIPMENT LIST" AS MAINTAINED UNDER MCP-3350, DATA MANAGEMENT OF CONFIGURATION MANAGED FIELDS IN THE INTU PROJECT EQUIPMENT LIST.

Stream Number		35-2	36	37	38	39	40	41	42	43	44	45	46	47	48	49	50	51	52	95
Stream Name		Avg. Total Solids to PRC (at PRC)	PRC Solids	PRC Cooling/ Fluidizing Gas	PRF Jet – Motive Nitrogen	Filter Solids to PRC	PRC Gas Outlet	PRF solids	Product Pump Transfer Gas	PHVF Solids	Nitrogen for Canister Vacuum	PRF Gas	Canister Vacuum Gas/Solids	PRF to OGF	Canister Exhaust Hood Air	PHVF Gas	PHVF to OGF	PHVF Jet – Motive Air	PRF/PHVF to OGF	Product Solids in Canister
VARIABLE	UNITS																			
Pressure	psia	15.20	12.10	17.24	137.40	42.40	15.15	12.40	42.40	12.40	12.30	14.42	9.40	10.46	12.27	11.21	10.65	112.40	10.56	12.10
Temperature, NOTE 12	deg C	250	150	20	25	25	200	100	25	100	25	198.97	100	199	50	50	25	25	199	25
Total Mass Flow	LB/HR	554.47	264.03	1250.00	0.00	13.58	1568.63	13.58	0.00	0.00	0.00	1579.36	0.00	1579.36	0.00	37.00	37.00	0.00	1616.36	264.01
Liquid Mass Flow	LB/HR	0.00	0.00	0.00	0.00	0.00	0.00	0.00	0.00	0.00	0.00	0.00	0.00	0.00	0.00	0.00	0.00	0.00	0.00	0.00
Volume Flow	gpm	----	----	----	----	----	----	----	----	----	----	----	----	----	----	----	----	----	----	----
Spec. Gravity		----	----	----	----	----	----	----	----	----	----	----	----	----	----	----	----	----	----	----
Gas Mass Flow	LB/HR	290.45	0.00	1250.00	0.00	0.00	1555.05	0.00	0.00	0.00	0.00	1579.35	0.00	1579.35	0.00	37.30	37.00	0.00	1616.35	0.00
Avg. Mole. Wt.		28.00	----	28	28	28.00	28.00	----	28	----	28.00	24.00	28.00	28.00	29.00	28.30	28.00	29.00	28.00	----
Gas Vol. Flow	ACFM	114.92	0.00	244.51	0.00	0.00	558.55	0.00	0.00	0.00	0.00	564.90	0.00	819.89	0.00	12.26	11.92	0.00	831.23	0.00
Gas Vol. Flow	SCFM	65.60	0.00	282.31	0.00	0.00	351.21	0.00	0.00	0.00	0.00	356.70	0.00	356.70	0.00	8.36	8.36	0.00	365.05	0.00
Solid Mass Flow	LB/HR	264.03	264.03	0.00	0.00	13.58	13.58	13.58	0.00	0.00	0.00	1.10E-02	0.00	1.10E-02	0.00E+00	0.00E+00	0.00E+00	0.00	1.10E-02	264.01
Radionuclide Bal.																				
Cs-137	Ci/hr	2.60E+01	2.60E+01	0.00	0.00	1.34E+00	1.34E+00	1.34E+00	0.00	0.00E+00	0.00	1.63E-06	0.00E+00	1.63E-06	0.00E+00	0.00E+00	0.00E+00	0.00	1.63E-06	2.60E+01
Sr-90	Ci/hr	1.70E+01	1.70E+01	0.00	0.00	8.75E-01	8.75E-01	8.75E-01	0.00	0.00E+00	0.00	1.07E-06	0.00E+00	1.07E-06	0.00E+00	0.00E+00	0.00E+00	0.00	1.07E-06	1.70E+01
Pu-238	Ci/hr	5.57E-01	5.57E-01	0.00	0.00	2.86E-02	2.86E-02	2.86E-02	0.00	0.00E+00	0.00	3.49E-08	0.00E+00	3.49E-08	0.00E+00	0.00E+00	0.00E+00	0.00	3.49E-08	5.57E-01
Pu-239	Ci/hr	6.04E-02	6.04E-02	0.00	0.00	3.11E-03	3.11E-03	3.11E-03	0.00	0.00E+00	0.00	3.79E-09	0.00E+00	3.79E-09	0.00E+00	0.00E+00	0.00E+00	0.00	3.79E-09	6.04E-02
Am-241	Ci/hr	4.72E-02	4.72E-02	0.00	0.00	2.43E-03	2.43E-03	2.43E-03	0.00	0.00E+00	0.00	2.95E-09	0.00E+00	2.95E-09	0.00E+00	0.00E+00	0.00E+00	0.00	2.95E-09	4.72E-02
Pu-240	Ci/hr	2.24E-02	2.24E-02	0.00	0.00	1.15E-03	1.15E-03	1.15E-03	0.00	0.00E+00	0.00	1.40E-09	0.00E+00	1.40E-09	0.00E+00	0.00E+00	0.00E+00	0.00	1.40E-09	2.24E-02
U-234	Ci/hr	8.04E-04	8.04E-04	0.00	0.00	4.13E-05	4.13E-05	4.13E-05	0.00	0.00E+00	0.00	5.03E-11	0.00E+00	5.03E-11	0.00E+00	0.00E+00	0.00E+00	0.00	5.03E-11	8.04E-04
U-238	Ci/hr	1.93E-05	1.93E-05	0.00	0.00	9.92E-07	9.92E-07	9.92E-07	0.00	0.00E+00	0.00	1.21E-12	0.00E+00	1.21E-12	0.00E+00	0.00E+00	0.00E+00	0.00	1.21E-12	1.93E-05
Pu-242	Ci/hr	1.15E-05	1.15E-05	0.00	0.00	5.92E-07	5.92E-07	5.92E-07	0.00	0.00E+00	0.00	7.21E-13	0.00E+00	7.21E-13	0.00E+00	0.00E+00	0.00E+00	0.00	7.21E-13	1.15E-05
U-233	Ci/hr	5.05E-06	5.05E-06	0.00	0.00	2.60E-07	2.60E-07	2.60E-07	0.00	0.00E+00	0.00	3.16E-13	0.00E+00	3.16E-13	0.00E+00	0.00E+00	0.00E+00	0.00	3.16E-13	5.05E-06

David E. Keller
CWI
2011.[illegible]06'00'

STATE OF IDAHO
10196
DAVID E. KELLER

SIGNATURES/DATES APPLY TO CURRENT RELEASE ONLY	SIGN AND DATE
DESIGN: D. KELLER, P.E.	
DRAWN: A. KEY	
TECHNICAL CHECK: J. KLINGER, P.E.	
ENG. GROUP SUPERVISOR: R. EASTMAN, P.E.	
DESIGN LEAD: D. CLARK, P.E.	
DRAWING CHECK/ EFFECTIVE DATE: G. MACE	
PROJECT NUMBER: 25051	
DRF NUMBER: ---	

Idaho Cleanup Project CH2MWOG

INTEC CPP-1696
INTEGRATED WASTE TREATMENT UNIT
PROCESS FLOW DIAGRAM
SBW PRODUCT TRANSFER AND LOADOUT
CARBONATE HS CASE

SIZE E | CAGE CODE 10001 | DWG- 632753 | REV 9
SCALE: NONE | SHEET 1 OF 1

© KEMAL

File: 632753-9.dwg
Path: V:\Active\Drawings\
Date: 10/15/11 1:06 PM Layout: Normal(pro)1
PLOTTED AS: B/L1 10-14-11 11:10AM -334594

REVISIONS	
REV	DESCRIPTION
8	INITIAL RELEASE, PRIOR HISTORY REMOVED DELETED SHEET 2, SEE DRF-333118
9	SEE DRF-334594

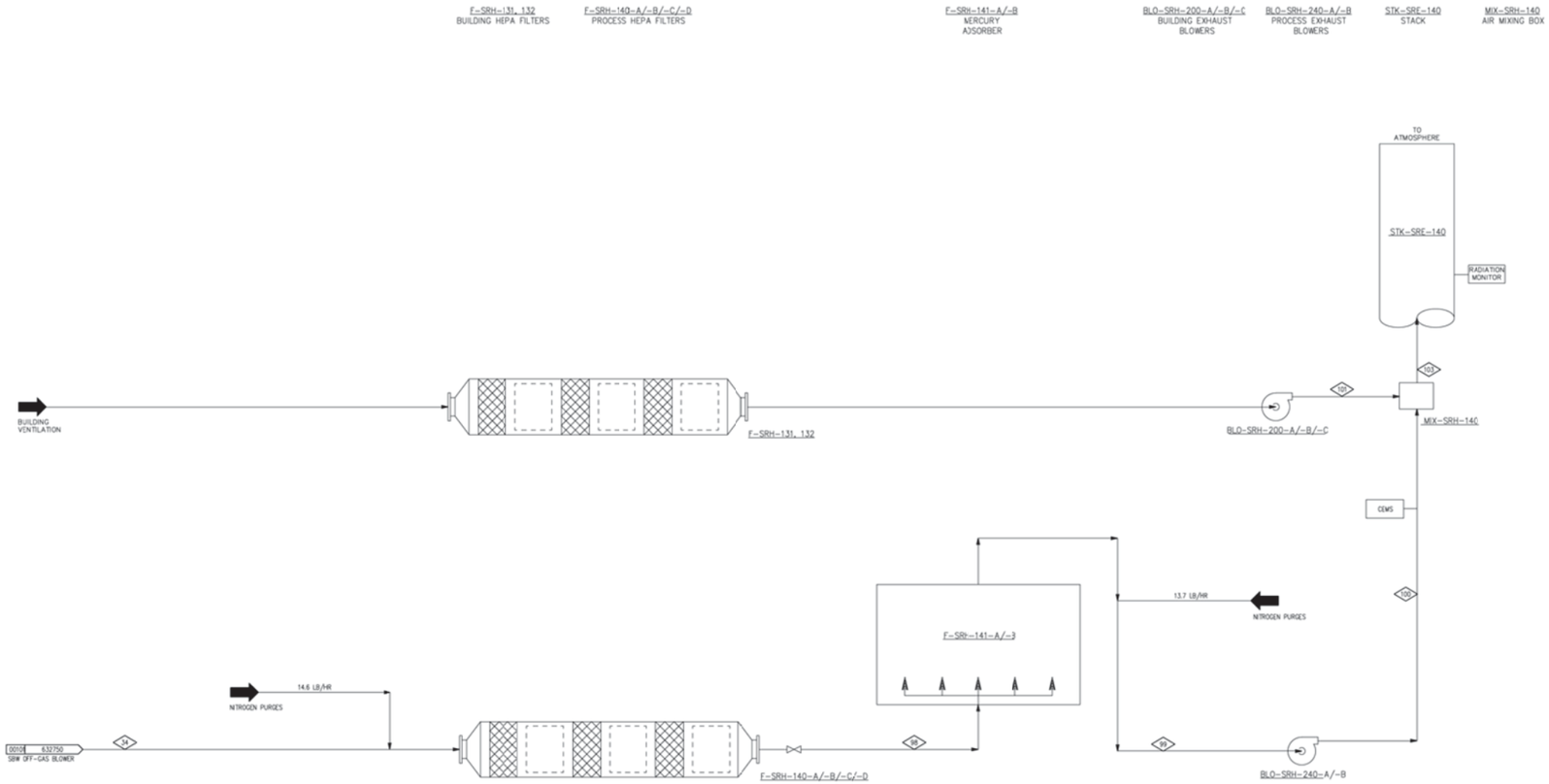

Stream Number		34	98	99	100	101	103
Stream Name		SBW Offgas Blower Outlet	Process HEPA Outlet	Mercury Adsorber Outlet	Process Blower Outlet	Building Blower Outlet	Stack Discharge
VARIABLE	UNITS						
Pressure	psia	12.09	11.63	10.45	12.60	12.61	12.20
Temperature, NOTE 5	deg C	183	175	170	190	52.3	61.58
Total Mass Flow	LB/HR	10,185.4	10,200.0	10,213.7	10,213.7	206,664.7	216,878.3
Liquid Mass Flow	LB/HR	0.00	0.00	0.00	0.00	0.00	0.00
Volume Flow	gpm	---	---	---	---	---	---
Spec. Gravity		---	---	---	---	---	---
Gas Mass Flow	LB/HR	10,185.3	10,200.0	10,213.7	10,213.7	206,664.7	216,878.3
Avg. Mole. Wt.		22.86	22.86	22.86	22.86	29.00	28.64
Gas Vol. Flow	ACFM	5413.7	5534.9	6099.3	5286.9	5.92E+04	6.69E+04
Gas Vol Flow	SCFM	2817.7	2828.8	2825.6	2825.6	4.51E+04	4.79E+04
Solid Mass Flow	LB/HR	4.72E-02	4.25E-09	4.25E-09	4.25E-09	0.00E+00	4.25E-09
Radionuclide Bal.							
Cs-137	Ci/hr	6.50E-06	4.18E-10	4.18E-10	4.18E-10	0.00E+00	4.18E-10
Sr-90	Ci/hr	4.26E-06	2.74E-10	2.74E-10	2.74E-10	0.00E+00	2.74E-10
Pu-238	Ci/hr	1.39E-07	8.96E-12	8.96E-12	8.96E-12	0.00E+00	8.96E-12
Pu-239	Ci/hr	1.51E-08	9.72E-13	9.72E-13	9.72E-13	0.00E+00	9.72E-13
Am-241	Ci/hr	1.18E-08	7.59E-13	7.59E-13	7.59E-13	0.00E+00	7.59E-13
Pu-240	Ci/hr	5.61E-09	3.60E-13	3.60E-13	3.60E-13	0.00E+00	3.60E-13
U-234	Ci/hr	2.01E-10	1.29E-14	1.29E-14	1.29E-14	0.00E+00	1.29E-14
U-238	Ci/hr	4.83E-12	3.10E-16	3.10E-16	3.10E-16	0.00E+00	3.10E-16
Pu-242	Ci/hr	2.88E-12	1.85E-16	1.85E-16	1.85E-16	0.00E+00	1.85E-16
U-233	Ci/hr	1.26E-12	8.12E-17	8.12E-17	8.12E-17	0.00E+00	8.12E-17

NOTES

1. SEE HVAC DRAWINGS FOR BUILDING VENTILATION.
2. MASS BALANCE BASIS TAKEN CALC. 28276-21-097, REV. 4. TEMPERATURE AND PRESSURE PROFILES HAVE BEEN MODIFIED TO MATCH PHYSICAL DESIGN AND PIPING HEAT TRANSFER CALCULATIONS.
3. DELETED.
4. NITROGEN CONSUMPTION BASIS TAKEN FROM CALC. 28276-21-097, REV. 2.
5. TEMPERATURES IN TABLE REPRESENT AVERAGE VALUES.
6. THE FLOW PATHS ON THIS DRAWING HAVE BEEN VERIFIED TO BE AS-BUILT BY THE IWTU DESIGN AUTHORITY GROUP. FLOWRATES SHOWN ARE DESIGN VALUES AND HAVE NOT BEEN AS-BUILT.
7. THE QUALITY LEVEL AND ASSOCIATED QUALITY LEVEL DETERMINATION FOR EQUIPMENT, INSTRUMENTS, AND COMPONENTS ON THIS DRAWING ARE IDENTIFIED ON THE "IWTU PROJECT EQUIPMENT LIST" AS MAINTAINED UNDER MCP-3350, DATA MANAGEMENT OF CONFIGURATION MANAGED FIELDS IN THE IWTU PROJECT EQUIPMENT LIST.

David E. Keller
CWI
2011.10.05 07:05:07
PROFESSIONAL ENGINEER
10100
STATE OF IDAHO
DAVID E. KELLER

SIGNATURES/DATES APPLY TO CURRENT RELEASE ONLY	SIGN AND DATE
DESIGN: D. KELLER, P.E.	
DRAWN: A. KEY	
TECHNICAL CHECK: J. KLINGER, P.E.	
ENG GROUP SUPERVISOR: R. EASTMAN, P.E.	
DESIGN LEAD: D. CLARK, P.E.	
DRAWING CHECK/ EFFECTIVE DATE: G. MACE	
PROJECT NUMBER: 25051	
DRF NUMBER: ---	

Idaho Cleanup Project

INTEC CPP-1696
INTEGRADED WASTE TREATMENT UNIT
PROCESS FLOW DIAGRAM
PROCESS EXHAUST & BUILDING VENTILATION
CARBONATE HS CASE

SIZE	CAGE CODE NUMBER	DWG-	REV
E	20 1696124136	632754	9
SCALE: NONE		SHEET 1 OF 1	

File: 632754-9.dwg
Path: V:\Work\Designs\
Date: 10/13/11 11:44 AM Layout: Normal
STATE AS BUILT 10-14-2011 DRF-334594
© INTEC

FMT-E1-ICP REV 2017-02-28

REVISIONS	
REV	DESCRIPTION
0	ISSUED FOR DESIGN FREEZE
1	UPDATED PER PDSA
2	UPDATED PER COST REDUCTION PCN 1152 & PDSA
3	MAJOR CHANGES, ADDED SHEET 4, SEE DRF-323867
4	CHANGED TITLE BLOCK SEE DRF-325311
5	INCORPORATED FCN 1690, 2641R1 AND ADDITIONAL CHANGES, SEE DRF-331511
6	INCORPORATED FCN 3708-R1 SEE DRF-333636
7	AS BUILT AS OF 9/7/2011, SEE DRF-334331 INCORPORATED FCN 3963, 4006
8	AS BUILT AS OF 4/25/2012, SEE DRF-336286 INCORPORATED FCN 8440
9	AS BUILT AS OF 01/23/2013, SEE DRF-338390 INCORPORATED FDC-8651, 8789 AND ADDED 5 SH
10	AS BUILT AS OF 11/04/2013, SEE DRF-340494 INCORP'D FDC-9180 AND 9324
11	AS BUILT AS OF 12/09/2013, SUBMITTAL TO STATE FOR RCRA PERMIT, INCORP'D FDC-9446, SEE DRF-340823
12	AS BUILT AS OF 01/13/2014, SUBMITTAL TO STATE FOR RCRA PERMIT, INCORP'D FDC-9505, SEE DRF-341040
13	AS BUILT AS OF 4/24/2014, INCORP'D FDC-9734 SEE DRF-341980
14	AS BUILT AS OF 06/15/2015, INCORP'D FDC-10333, 10351, 10429, SEE DRF-345730
15	AS BUILT AS OF 03/01/2016, INCORP'D FDC-10700 SEE DRF-348029
16	AS BUILT AS OF 02/06/2018, INCORP'D FDC-11473, UPDATED TITLE BLOCK, SEE DRF-357575
17	AS BUILT AS OF 04/11/2018, INCORP'D FDC-11742 SEE DRF-358619
18	REVISED CALCULATED TOTAL FLOW DELAY SEE DRF-359250

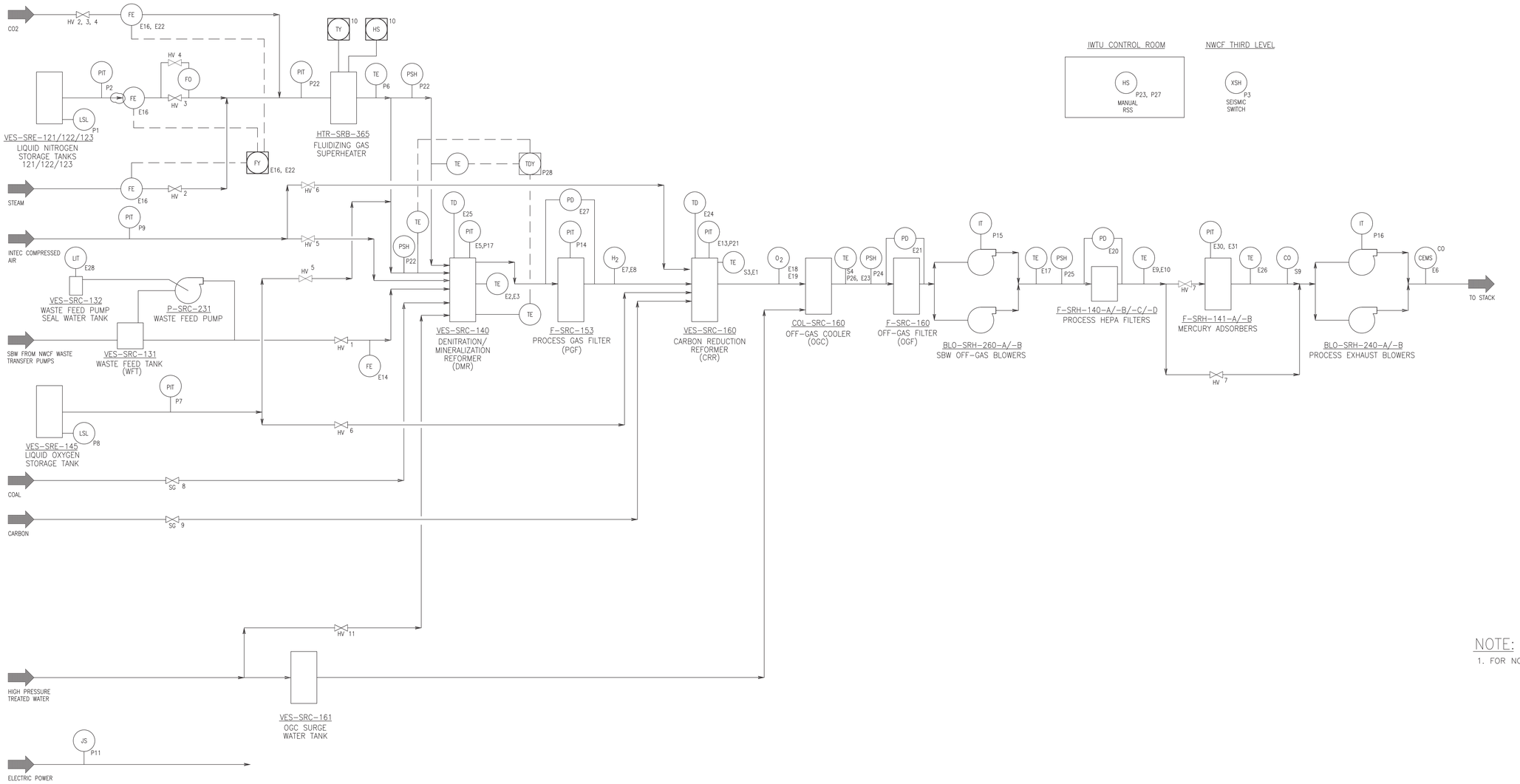

NOTE:

1. FOR NOTES SEE SHEET 2.

QUALITY LEVEL: 3

SIGNATURES/DATES APPLY TO CURRENT RELEASE ONLY.	SIGN AND DATE
DESIGN: T. SMITH	Thomas E. Smith Portage 2018.06.13 14:38:05 -06'00'
DRAFTER: A. KEY	Angela L Key Angela L Key 2018.06.13 14:12:07 -06'00'
TECHNICAL CHECK: W. JOHNSTON, P.E.	William John Johnston Boston Government Services 2018.06.13 15:00:43 -06'00'
ENG GROUP SUPERVISOR: NA	– –
DESIGN LEAD/AUTHORITY: M. CHADEK, P.E.	Mark Chadek Fluor Idaho 2018.06.13 16:53:06 -06'00'
DRAFTING CHECK/ EFFECTIVE DATE: K. KELLER	Kris Keller Fluor Idaho 2018.06.13 17:05:05 -06'00'
PROJECT NUMBER: 25051	
DRF NUMBER: 323867	

Idaho Cleanup Project Core — Fluor IDAHO

INTEC CPP-1696
INTEGRATED WASTE TREATMENT UNIT

RAPID SHUTDOWN SYSTEM (RSS)
PROCESS FLOW DIAGRAM

SIZE	INDEX CODE NUMBER				DWG-	REV
	AREA	TYPE	CI	DISC		
E	200	1696	24	136	632755	18

SCALE: NONE — SHEET 1 OF 5

File: 632755-18.dwg
Path: K:\WTU\DRF-359250
Date: 06/13/18 11:41 AM Layout Name: 632755-Sht 1
ID: KEYAL

RSS RESPONSES / (NOTE 23) / INITIATING EVENT / SENSING INSTRUMENT (DCS TAG)	1	11	12	2	7	3	4	5	6	8	9	10	13	14
	SBW FEED CUT-OFF P&ID 632760	DMR WASTE FEED NOZZLE FLUSH WATER OFF P&ID 632760	INTENTIONALLY LEFT BLANK	STREAM CUT-OFF P&ID 632801	GAC BY-PASS P&ID 632798	FLUIDIZING NITROGEN FLOW ON, OFF OR NO ACTION P&ID 632801	DMR NITROGEN PURGE ON, OFF OR NO ACTION P&ID 632801	OXYGEN/AIR TO DMR CUT-OFF P&ID 632801/632761	OXYGEN/AIR TO CRR CUT OFF P&ID 632764	COAL TO DMR CUT-OFF P&ID 632782	CARBON TO CRR CUT-OFF P&ID 632783	SUPERHEATER SHUTDOWN P&ID 632801	BLOWERS TO MANUAL	SHUTOFF AIR SOURCES TO OGF
	HV-SRC-140-021 (HS-C-140-21) HV-SRC-140-022 (HS-C-140-22) HV-SRC-140-023 (HS-C-140-23) FC-SRC-140-1 (FC-C-140-1) FC-SRC-140-2 (FC-C-140-2) FC-SRC-140-3 (FC-C-140-3) (NOTE 6)	HV-SRC-140-009F (HS-C-140-9F) HV-SRC-140-010F (HS-C-140-10F) HV-SRC-140-011F (HS-C-140-11F) HV-SRC-140-031 (HS-C-140-31) (NOTE 13)		HV-SRB-365-007 (HS-B-365-7) FV-SRB-365-005 (FC-B-365-5) (NOTE 6 AND 38)	HV-SRH-141-014A/B (HS-H-141-14A, 14B) OPEN HV-SRH-141-011A (HS-H-141-11A) CLOSED (NOTE 20)	UNLESS NOTED BELOW, THE NITROGEN RSS WILL SET THE NITROGEN FLOW RATE VIA FC-B-365-2 (NOTE 25 AND 39)	(NOTES 5 AND 35)	HV-SRB-365-010 (HS-B-365-10) HV-SRC-540-003 (HS-C-540-3) FV-SRB-365-009 (FC-B-365-9) FV-SRC-540-011 (FC-C-540-11) FV-SRC-540-012 (FC-C-540-12) FV-SRC-540-013 (FC-C-540-13) (NOTE 6)	HV-SRC-160-014 (HS-C-160-14) OXYGEN HV-SRC-160-015 (HS-C-160-15) AIR FV-SRC-160-006 (FC-C-160-6) OXYGEN FV-SRC-160-007 (FC-C-160-7) OXYGEN FV-SRC-160-008 (FC-C-160-8) AIR FV-SRC-160-009 (FC-C-160-9) AIR FV-SRC-160-010 (FC-C-160-10) FV-SRC-160-012 (FC-C-160-12) (NOTE 10)	SET HS-C-637-1 TO STOP	SET HS-C-639-1 TO STOP	TC-B-365-1 HS-B-365-21	SEE NOTES 29 AND 30	SEE NOTE 31
S1 INTENTIONALLY LEFT BLANK														
S2 INTENTIONALLY LEFT BLANK														
S3 LOW-LOW AVERAGE TEMPERATURE IN THE CRR P&ID 632764 TE-SRC-160-004 (T-C-160-4) TE-SRC-160-012 (T-T-160-12) TE-SRC-160-016 (T-T-160-16) TE-SRC-160-025 (T-T-160-25) TE-SRC-160-026 (T-T-160-26) AVERAGE: TC-C-160-4 (NOTE 5)	YES	YES		YES	YES (NOTE 3)	ON	NO ACTION	NO	NO	NO	NO	NO	NO	NO
S4 HIGH-HIGH OFF-GAS TEMPERATURE AFTER THE OFF-GAS COOLER (EITHER) P&ID 632766 TE-SRC-160-001A, 001B (T-C-160-1A, 1B)	YES	YES		YES	YES (NOTE 24)	ON	NO ACTION	NO	NO	NO	NO	NO	NO	NO
S5 INTENTIONALLY LEFT BLANK														
S6 INTENTIONALLY LEFT BLANK														
S7 INTENTIONALLY LEFT BLANK														
S8 INTENTIONALLY LEFT BLANK														
S9 HIGH-HIGH CO AT OUTLET OF MERCURY ADSORBER (SSIS SIF 3 TRIP) P&ID 632799 YS-SRH-403-031 (YS-H-403-31) (NOTE 5)	YES	YES		YES	YES (NOTE 24)	ON	NO ACTION	NO	NO	NO	NO	NO	NO	NO
E1 HIGH-HIGH AVERAGE CRR TEMPERATURE P&ID 632764 TE-SRC-160-004 (T-C-160-4) TE-SRC-160-0012 (T-C-160-12) TE-SRC-160-016 (T-C-160-16) TE-SRC-160-025 (T-C-160-25) TE-SRC-160-026 (T-C-160-26) AVERAGE: TC-C-160-4	YES	NO		NO	YES	NO ACTION	NO ACTION	NO	YES	NO	NO	NO	NO	NO
E2 LOW-LOW AVERAGE DMR TEMPERATURE P&ID 632762 TE-SRC-140-002A/B/C (T-C-140-2A, 2B, 2C) TE-SRC-140-003A/B/C (T-C-140-3A, 3B, 3C) TE-SRC-140-005A/B/C (T-C-140-5A, 5B, 5C) TE-SRC-140-012A/B/C (T-C-140-12A, 12B, 12C) AVERAGE: TC-C-140-9	YES	NO		NO	NO	NO ACTION	NO ACTION	NO	NO	NO	NO	NO	NO	NO
E3 HIGH-HIGH AVERAGE DMR TEMPERATURE P&ID 632762 TE-SRC-140-002A/B/C (T-C-140-2A, 2B, 2C) TE-SRC-140-003A/B/C (T-C-140-3A, 3B, 3C) TE-SRC-140-005A/B/C (T-C-140-5A, 5B, 5C) TE-SRC-140-012A/B/C (T-C-140-12A, 12B, 12C) AVERAGE: TC-C-140-9	YES	NO		NO	NO	NO ACTION	NO ACTION	YES	NO	YES	NO	NO	NO	NO
RESPONSE PRIORITY	"YES NOTE 14" HAS PRIORITY OVER "YES"	"YES NOTE 14" HAS PRIORITY OVER "YES"		"YES NOTE 21" HAS PRIORITY "YES"	"YES NOTE 24" HAS PRIORITY OVER "YES". "YES" HAS PRIORITY OVER "YES NOTE 3"	"OFF" HAS PRIORITY OVER "ON"	"OFF" HAS PRIORITY OVER "ON"	"YES" HAS PRIORITY OVER "YES NOTE 37"	"YES" HAS PRIORITY OVER "YES NOTE 37"				"NOTE 29" HAS PRIORITY OVER "NOTE 30"	

NOTES

1. THE SEISMIC SWITCH IS LOCATED IN THE NWCF BUILDING.

2. DELETED

3. THERE WILL BE A TIME DELAY OF 300 SECONDS BEFORE THE GAC IS BYPASSED TO ENSURE THAT ALL THE MERCURY IN THE SYSTEM HAS PASSED THROUGH THE GAC PRIOR TO BEING BYPASSED. THE AUXILIARY NITROGEN TO THE GAC WILL BE STARTED BY OPENING VALVE HV-SRH-141-007 (HS-H-141-7).

4. DELETED

5. CERTAIN RSS SHUTDOWN RESPONSES WILL BE INHIBITED DURING STARTUP, USING THE IWTU STARTUP BYPASS SWITCH SEL-B-135, SO THE ASSOCIATED SYSTEM CAN BE PLACED ON LINE AS FOLLOWS:
FOR INITIATING EVENT S3, S9, E9, E13, E16, E17, P6, P15, AND P16 INHIBIT RESPONSE 3

FOR EVENT E18 INHIBIT RESPONSES 3, 8, AND 9
FOR ALL INITIATING EVENTS, INHIBIT RESPONSE 4_ON

6. MODULATING VALVE SET OUTPUT TO 0%

7. DELETED

8. DELETED

9. DELETED

10. FV-SRC-160-10, 12 NITROGEN VALVES GO TO AN AUTO SET POINT. VALVES NOT SAFETY SIGNIFICANT.

11. ALL MAJOR SOURCES OF NITROGEN WILL BE STOPPED TO THE DMR AND THIS WILL TAKE PRIORITY OVER TURNING FLUID GAS NITROGEN ON IN CASE OF OTHER TRIPS. IN ADDITION TO THE FLUID GAS MAJOR SOURCES OF NITROGEN INCLUDE:

N2 TO DMR CYCLONES: CLOSE HV-SRC-157-001 (HS-C-157-1) AND HV-SRC-157-002 (HS-C-157-2); N2 TO DMR WASTE FEED NOZZLES: CLOSE HV-SRC-540-004 (HS-C-540-4); N2 TO ADDITIVE INLET LINE PURGE: CHANGE FY-SRC-637-008 (FC-C-637-8) TO TRACK WITH A 0% OUTPUT; N2 TO PGF: CLOSE HV-SRC-553-004 (HS-C-553-4) AND SET TO TRACK WITH A 0% OUTPUT FY-SRC-553-003 (FC-C-553-3); CLOSE HV-SRC-553-001 (HS-C-553-1) AND SET TO TRACK WITH A 0% OUTPUT FY-SRC-553-001 (FC-C-553-1); CLOSE HV-SRC-553-005 (HS-C-553-5) AND SET TO TRACK WITH A 0% OUTPUT FY-SRC-553-003 (FC-C-553-5); STOP N2 PULSE CYCLE TIMER FOR PGF FILTERS.

12. DELETED

13. IMMEDIATELY SET SBW NOZZLE FEED VALVES TO CLOSE:
HV-SRC-140-021 (HS-C-140-21) SOLENOID DMR NOZZLE A
HV-SRC-140-022 (HS-C-140-22) SOLENOID DMR NOZZLE B
HV-SRC-140-023 (HS-C-140-23) SOLENOID DMR NOZZLE C
IMMEDIATELY SET SBW CONTROLLER MODES TO TRACK OR MANUAL AND OUTPUT TO 0% TO CLOSE VALVES:
FV-SRC-140-001 (FC-C-140-1) CONTROLLER DMR NOZZLE A
FV-SRC-140-002 (FC-C-140-2) CONTROLLER DMR NOZZLE B
FV-SRC-140-003 (FC-C-140-3) CONTROLLER DMR NOZZLE C
AFTER THE FEED VALVES ARE CLOSED A WATER PURGE OF THE FEED NOZZLES IS STARTED, ALLOW TWO (2) SECONDS FOR THE NOZZLE FEED VALVES COMPLETE CLOSING BEFORE BEGINNING THE FLUSH SEQUENCE.

THE FLUSH SEQUENCE IS AS FOLLOW:
IMMEDIATELY SET SBW NOZZLE PURGE VALVES TO OPEN BUT DO NOT INTERLOCK THEM SO THAT THEY CAN BE CLOSED BY THE OPERATOR IF DESIRED:
HV-SRC-140-026 (HS-C-140-26)
HV-SRC-140-027 (HS-C-140-27)
HV-SRC-140-028 (HS-C-140-28)

TWO SECONDS AFTER THE SBW FEED NOZZLE VALVE CLOSED COMMAND IS SENT, NOZZLE A IS FLUSHED WITH WATER BY OPENING VALVE:
HV-SRC-140-030DF (HS-C-140-30D) AND HV-SRC-140-031 (HS-C-140-31)
THEN OPENING FOR 90 SECONDS THE FOLLOWING VALVE:
HV-SRC-140-009F (HS-C-140-9F)
AFTER COMPLETING FLUSH OF NOZZLE A PULSE OPEN THE FOLLOWING VALVES:
HV-SRC-140-026 (HS-C-140-26)

NOZZLE B IS FLUSHED BY OPENING FOR 30 SECONDS THE FOLLOWING VALVE:
HV-SRC-140-010F (HS-C-140-10F)
AFTER COMPLETING FLUSH ON NOZZLE B PULSE OPEN THE FOLLOWING VALVES:
HV-SRC-140-027 (HS-C-140-27)

NOZZLE C IS FLUSHED BY OPENING FOR 30 SECONDS THE FOLLOWING VALVE:
HV-SRC-140-011F (HS-C-140-11F)
AFTER COMPLETING FLUSH OF NOZZLE C PULSE OPEN THE FOLLOWING VALVES:
HV-SRC-140-028 (HS-C-140-28)

CLOSE THE FOLLOWING TWO VALVES:
HV-SRC-140-030DF (HS-C-140-30D) AND HV-SRC-140-031 (HS-C-140-31)
RESPONSE CAN NOT HAPPEN AGAIN UNTIL RSS IS RESET.

14. WATER FLUSH OF THE WF INJECTOR NOZZLES WILL NOT BE ALLOWED DURING THESE EVENTS. VALVES HV-SRC-140-009F (HS-C-140-9F), HV-SRC-140-010F (HS-C-140-10F), HV-SRC-140-031 (HS-C-140-31) AND HV-SRC-140-011F (HS-C-140-11F) WILL BE CLOSED.

15. DELETED

16. DELETED

17. DELETED.

18. DELETED

19. DELETED

20. NITROGEN PURGE TO GAC BEDS WILL BE TURNED ON.

21. STEAM WILL BE SHUT OFF IMMEDIATELY WITH NO RAMP DOWN BY CLOSING STEAM SHUT OFF VALVE HV-SRB-365-007 (HS-B-365-7) AND PLACING STEAM CONTROLLER (FC-B-365-5) TO TRACK MODE AND ITS OUTPUT TO ZERO.

22. DELETE

23. NO MEANS NO ACTION OCCURS UNLESS OTHERWISE NOTED.

24. IF THE BYPASS VALVES DO NOT OPEN IN 30 SECONDS THEN CLOSE INLET VALVE.

25. IF FC-B-365-2 IS GREATER THAN 35% OPEN AND A TRIP CALLS FOR THE NITROGEN TO BE TURNED ON THEN NO ACTION SHOULD OCCUR.

26. CLOSE VALVE FV-SRC-637-008 (FC-C-637-8) BY SETTING TO TRACK WITH AN OUTPUT OF 0%

27. DELETED

28. ALL CHANGES TO THIS DRAWING MUST BE TRANSFERRED TO EDF-8810.

29. SHUTDOWN BLOWERS BLO-SRH-260-A, AND BLO-SRH-260-B AFTER 10 SECOND DELAY, BLO-SRH-240-A AND BLO-SRH-240-B AFTER 60 SECOND DELAY.

30. OPEN VALVE HV-SRH-260-005 (HC-H-260-5) TO 40% AND SET BLOWER SPEED FOR OPERATING BLOWERS TO 1500 RPM ALLOW OPERATION AFTER TRIP.

31. CLOSE VALVES HV-SRC-588-009 (HS-C-588-9), HV-SRC-581-004 (HS-C-581-4), HV-SRC-190-006 (HS-C-190-6) AND HV-SRC-191-006 (HS-C-191-6). SET FV-SRC-190-003 (FC-C-190-3), PV-SRC-588-009 (PC-C-588-9) AND PV-SRC-581-002 (PC-C-581-2) TO TRACK AT 0% OPEN.

32. SWITCH HS-AWFCO WILL BE USED TO TEST THE AUTO FEED CUT OFF WITH NOZZLE FLUSH.

33. DELETE

34. SWITCH HS-SSIS-TEST WILL ALLOW OPERATION OF HV-SRC-140-031 (HS-C-140-31), HV-SRC-160-013 (HS-C-160-13), AND HV-SRB-365-007 (HS-B-365-7) WHEN RSS IS TRIPPED.

35. FOR ON-OPEN HV-SRB-365-003 (HS-B-365-3); SET FV-SRB-365-007 (FC-B-365-7) TO 30%, SET FV-SRB-365-002 (FC-B-365-2) TO MANUAL AT 49% FOR 3 MINUTES; THEN CLOSE FV-SRB-365-003 (FC-B-365-3) AND SET FV-SRB-365-002 (FC-B-365-2) TO TRACK AT 0%. FOR OFF – CLOSE VALVE HV-SRB-365-003 (HS-B-365-3) AND SET FV-SRB-365-002 (FC-B-365-2) TO TRACK AT 0%.

36. SWITCH HS-GAC-TEST WILL ALLOW OPERATION OF HV-SRH-141-011A (HS-H-141-11A) WHEN RSS IS TRIPPED.

37. TRIP DELAYED UNTIL FC-C-365-2 OUTPUT IS LESS THAN 1%

38. STEAM WILL RAMP DOWN TO ZERO FLOW OVER 20 SECONDS USING FC-B-365-5 THEN CLOSE HS-B-365-10.

39. IN N2 FLOW IS OFF THEN HS-B-365-3 WILL OPEN AND FC-B-365-2 WILL RAMP TO 49% OVER 20 SECONDS.

SIZE	INDEX CODE NUMBER				DWG-	REV
	AREA	TYPE	ID	DISC		
E	200	1696	24	136	632755	18
SCALE: NONE					SHEET 2	

File: 632755-18.dwg
Paths: K:\WTU\DRF-359252
ID: KEVAL
Layout Name: 632755-Sht 2
Date: 06/13/18 11:41 AM

RSS RESPONSES (NOTE 23) / INITIATING EVENT / SENSING INSTRUMENT (DCS TAG)		1	11	12	2	7	3	4	5	6	8	9	10	13	14
		SBW FEED CUT-OFF P&ID 632760	DMR WASTE FEED NOZZLE FLUSH WATER OFF P&ID 632760	INTENTIONALLY LEFT BLANK	STREAM CUT-OFF P&ID 632801	GAC BY-PASS P&ID 632798	FLUIDIZING NITROGEN FLOW ON, OFF OR NO ACTION P&ID 632801	DMR NITROGEN PURGE ON, OFF OR NO ACTION P&ID 632801	OXYGEN/AIR TO DMR CUT-OFF P&ID 632801/632761	OXYGEN/AIR TO CRR CUT OFF P&ID 632764	COAL TO DMR CUT OFF P&ID 632782	CARBON TO CRR CUT OFF P&ID 632783	SUPERHEATER SHUTDOWN P&ID 632801	BLOWERS TO MANUAL	SHUTOFF AIR SOURCES TO OGF
		HV-SRC-140-021 (HS-C-140-21) HV-SRC-140-022 (HS-C-140-22) HV-SRC-140-023 (HS-C-140-23) FC-SRC-140-1 (FC-C-140-1) FC-SRC-140-2 (FC-C-140-2) FC-SRC-140-3 (FC-C-140-3) (NOTE 6)	HV-SRC-140-009F (HS-C-140-9F) HV-SRC-140-010F (HS-C-140-10F) HV-SRC-140-011F (HS-C-140-11F) HV-SRC-140-031 (HS-C-140-31) (NOTE 13)		HV-SRB-365-007 (HS-B-365-7) FV-SRB-365-005 (FC-B-365-5) (NOTE 6 AND 38)	HV-SRH-141-014A/B (HS-H-141-14A, 14B) OPEN HV-SRH-141-011A (HS-H-141-11A) CLOSED (NOTE 20)	UNLESS NOTED BELOW, THE NITROGEN RSS WILL SET THE NITROGEN FLOW RATE VIA FC-B-365-2 (NOTE 25 AND 39)	(NOTES 5 AND 35)	HV-SRB-365-010 (HS-B-365-10) HV-SRC-540-003 (HS-C-540-3) FV-SRB-365-009 (FC-B-365-9) FV-SRC-540-011 (FC-C-540-11) FV-SRC-540-012 (FC-C-540-12) FV-SRC-540-013 (FC-C-540-13) (NOTE 6)	HV-SRC-160-014 (HS-C-160-14) OXYGEN HV-SRC-160-015 (HS-C-160-15) AIR FV-SRC-160-006 (FC-C-160-6) OXYGEN FV-SRC-160-007 (FC-C-160-7) OXYGEN FV-SRC-160-008 (FC-C-160-8) AIR FV-SRC-160-009 (FC-C-160-9) AIR FV-SRC-160-010 (FC-C-160-10) FV-SRC-160-012 (FC-C-160-12) (NOTE 10)	SET HS-C-637-1 TO STOP	SET HS-C-639-1 TO STOP	TC-B-365-1 HS-B-365-21	SEE NOTES 29 AND 30	SEE NOTE 31
E4	INTENTIONALLY LEFT BLANK														
E5	HIGH-HIGH DMR PRESSURE (BOTH) P&ID 632762 PIT-SRC-140-001 (P-C-140-1) PIT-SRC-140-007 (P-C-140-7) 10 SECOND DELAY	YES (NOTE 14)	YES (NOTE 14)		YES (NOTE 21)	YES	OFF	ON	YES (NOTE 37)	YES (NOTE 37)	YES	YES	YES	NO	NO
E6	HIGH-HIGH CO IN THE PROCESS OFF-GAS (EITHER) P&ID 632799 AE-SRH-941-003A/B (A-H-941-3A, 3B)	YES	NO		NO	NO	NO ACTION	NO ACTION	NO	NO	NO	NO	NO	NO	NO
E7	LOW-LOW HYDROGEN IN DMR/PGF OFF-GAS (AVERAGE) P&ID 632763 AE-SRC-153-001A/B/C (A-C-153-1A, 1B, 1C) AVERAGE: AY-C-153-1	YES	NO		NO	NO	NO ACTION	NO ACTION	NO	NO	NO	NO	NO	NO	NO
E8	HIGH-HIGH HYDROGEN IN DMR/PGF OFF-GAS (AVERAGE) P&ID 632763 AE-SRC-153-001A/B/C (A-C-153-1A, 1B, 1C) AVERAGE: AY-C-153-1	YES	YES		YES	NO	ON	NO ACTION	NO	NO	YES	NO	NO	NO	NO
E9	LOW-LOW TEMPERATURE OUTLET OF THE PROCESS HEPA FILTERS/INLET TO THE MERCURY ADSORBERS (AVERAGE) P&ID 632797 TE-SRH-140-003A (T-H-140-3A) TE-SRH-140-003B (T-H-140-3B) AVERAGE T-H-140-3 (NOTE 5)	YES	NO		YES	YES (NOTE 3)	ON	NO ACTION	NO	NO	NO	NO	NO	NO	NO
E10	HIGH-HIGH TEMPERATURE IN OUTLET PROCESS HEPA FILTER/INLET TO MERCURY ADSORBERS (AVERAGE) P&ID 632797 TE-SRH-140-003A/B (T-H-140-3A, 3B) AVERAGE T-H-140-3	YES	YES		YES	YES	ON	NO ACTION	NO	NO	NO	NO	NO	NO	NO
E11	INTENTIONALLY LEFT BLANK														
E12	INTENTIONALLY LEFT BLANK														
E13	HIGH-HIGH PRESSURE IN THE CRR (BOTH) P&ID 632764 PIT-SRC-760-010 (P-C-760-10) PIT-SRC-760-016 (P-C-760-16) 10 SECOND DELAY (NOTE 5)	YES	YES		YES	NO	ON	NO ACTION	NO	NO	NO	NO	NO	NO	NO
E14	HIGH-HIGH SBW FEED RATE TO NOZZLES (SUM OF ALL FLOWS) P&ID 632760 FE-SRC-140-001 (F-C-140-1) FE-SRC-140-002 (F-C-140-2) FE-SRC-140-003 (F-C-140-3) FY-C-140-1	YES	NO		NO	NO	NO ACTION	NO ACTION	NO	NO	NO	NO	NO	NO	NO
E15	INTENTIONALLY LEFT BLANK														
E16	LOW-LOW DMR FLUIDIZING GAS FLOW (SUM OF ALL FLOWS) P&ID 632801 FE-SRB-365-005 (FC-B-365-5) FT-SRB-365-009 (FC-B-365-9) FT-SRB-365-002 (FC-B-365-2) FT-SRB-365-012 (FC-B-365-12) CALCULATED TOTAL FLOW FY-B-365-1 15 SECOND DELAY (NOTE 5)	YES	YES		YES	YES	ON	NO ACTION	YES	YES	YES	YES	NO	NO	NO
E17	LOW-LOW TEMPERATURE AT INLET OF HEPA FILTERS P&ID 632797 TE-SRH-140-002 (T-H-140-2) (NOTE 5)	YES	NO		YES	NO	ON	NO ACTION	NO	NO	NO	NO	NO	NO	NO
E18	LOW-LOW OXYGEN CONCENTRATION IN THE CRR OFF-GAS OUTLET (AVERAGE) P&ID 632764 AE-SRC-760-001A/B/C (A-C-760-1A, 1B, 1C) AVERAGE AC-C-760-1 (NOTE 5)	YES	YES		YES	YES (NOTE 3)	ON	NO ACTION	NO	NO	YES	YES	NO	NO	NO
E19	HIGH-HIGH OXYGEN CONCENTRATION IN THE CRR OFF-GAS OUTLET (AVERAGE) P&ID 632764 (ANY) AE-SRC-760-001A/B/C (A-C-760-1A, 1B, 1C) AVERAGE AC-C-760-1	YES	NO		NO	YES (NOTE 3)	NO ACTION	NO ACTION	NO	NO	NO	NO	NO	NO	NO
E20	HIGH HIGH HIGH PREFILTER DP (ANY) P&ID 632797 PDIT-SRH-140-004A (PD-H-140-4A) PDIT-SRH-140-004B (PD-H-140-4B) PDIT-SRH-140-004C (PD-H-140-4C) PDIT-SRH-140-004D (PD-H-140-4D) NOTE 29 AND 31	YES (NOTE 14)	YES (NOTE 14)		YES (NOTE 21)	YES	OFF	OFF (NOTE 11)	YES	YES	YES (NOTE 26)	NO	NO	NOTE 29	NO
E21	HIGH-HIGH OGF DP (DIFFERENCE) P&ID 632765 PIT-SRC-160-003B (P-C-160-3B) PIT-SRC-160-003A (P-C-160-3A) PD-C-160-3 10 SECOND DELAY	YES	NO		NO	NO	NO ACTION	NO ACTION	NO	NO	NO	NO	NO	NO	NO
E22	HIGH-HIGH DMR FLUIDIZING (SUM OF ALL FLOWS) P&ID 632801 FE-SRB-365-005 (FC-B-365-5) FT-SRB-365-009 (FC-B-365-9) FT-SRB-365-002 (FC-B-365-2) FT-SRB-365-012 (FC-B-365-12) CALCULATED TOTAL FLOW FY-B-365-1 10 SECOND DELAY	YES	NO		NO	NO	NO ACTION	NO ACTION	NO	NO	NO	NO	NO	NO	NO
E23	LOW-LOW OFF-GAS TEMPERATURE AT OUTLET OF OGC P&ID 632766 TE-SRC-160-001A, 001B, (T-C-160-1A, 1B)	YES	NO		NO	NO	NO ACTION	NO ACTION	NO	NO	NO	NO	NO	NO	NO
RESPONSE PRIORITY		"YES NOTE 14" HAS PRIORITY OVER "YES"	"YES NOTE 14" HAS PRIORITY OVER "YES"		"YES NOTE 21" HAS PRIORITY "YES"	"YES NOTE 24" HAS PRIORITY OVER "YES". "YES" HAS PRIORITY OVER "YES NOTE 3"	"OFF" HAS PRIORITY OVER "ON"	"OFF" HAS PRIORITY OVER "ON"	"YES" HAS PRIORITY OVER "YES NOTE 37"	"YES" HAS PRIORITY OVER "YES NOTE 37"				"NOTE 29" HAS PRIORITY OVER "NOTE 30"	

SIZE	INDEX CODE NUMBER				DWG-	REV
	AREA	TYPE	G	OGC		
E	200	1696	24	136	632755	18
SCALE: NONE					SHEET	3

File: 632755-18.dwg
Path: K:\WTU\DRF_359254
Date: 06/13/18 — 11:41 AM Layout Name: 632755-Sht 3
ID: KEYAL

RSS RESPONSES / (NOTE 23) / INITIATING EVENT / SENSING INSTRUMENT (DCS TAG)		1	11	12	2	7	3	4	5	6	8	9	10	13	14
		SBW FEED CUT-OFF P&ID 632760	DMR WASTE FEED NOZZLE FLUSH WATER OFF P&ID 632760	INTENTIONALLY LEFT BLANK	STREAM CUT-OFF P&ID 632801	GAC BY-PASS P&ID 632798	FLUIDIZING NITROGEN FLOW ON, OFF OR NO ACTION P&ID 632801	DMR NITROGEN PURGE ON, OFF OR NO ACTION P&ID 632801	OXYGEN/AIR TO DMR CUT-OFF P&ID 632801/632761	OXYGEN/AIR TO CRR CUT-OFF P&ID 632764	COAL TO DMR CUT-OFF P&ID 632782	CARBON TO CRR CUT-OFF P&ID 632783	SUPERHEATER SHUTDOWN P&ID 632801	BLOWERS TO MANUAL	SHUTOFF AIR SOURCES TO OGF
		HV-SRC-140-021 (HS-C-140-21) HV-SRC-140-022 (HS-C-140-22) HV-SRC-140-023 (HS-C-140-23) FC-SRC-140-1 (FC-C-140-1) FC-SRC-140-2 (FC-C-140-2) FC-SRC-140-3 (FC-C-140-3) (NOTE 6)	HV-SRC-140-009F (HS-C-140-9F) HV-SRC-140-010F (HS-C-140-10F) HV-SRC-140-011F (HS-C-140-11F) HV-SRC-140-031 (HS-C-140-31) (NOTE 13)		HV-SRB-365-007 (HS-B-365-7) FV-SRB-365-005 (FC-B-365-5) (NOTE 6 AND 38)	HV-SRH-141-014A/B (HS-H-141-14A, 14B) OPEN HV-SRH-141-011A (HS-H-141-11A) CLOSED (NOTE 20)	UNLESS NOTED BELOW, THE NITROGEN RSS WILL SET THE NITROGEN FLOW RATE VIA FC-B-365-2 (NOTE 25 AND 39)	(NOTES 5 AND 35)	HV-SRB-365-010 (HS-B-365-10) HV-SRC-540-003 (HS-C-540-3) FV-SRB-365-009 (FC-B-365-9) FV-SRC-540-011 (FC-C-540-11) FV-SRC-540-012 (FC-C-540-12) FV-SRC-540-013 (FC-C-540-13) (NOTE 6)	HV-SRC-160-014 (HS-C-160-14) OXYGEN HV-SRC-160-015 (HS-C-160-15) AIR FV-SRC-160-006 (FC-C-160-6) OXYGEN FV-SRC-160-007 (FC-C-160-7) OXYGEN FV-SRC-160-008 (FC-C-160-8) AIR FV-SRC-160-009 (FC-C-160-9) AIR FV-SRC-160-010 (FC-C-160-10) FV-SRC-160-012 (FC-C-160-12) (NOTE 10)	SET HS-C-637-1 TO STOP	SET HS-C-639-1 TO STOP	TC-B-365-1 HS-B-365-21	SEE NOTES 29 AND 30	SEE NOTE 31
E24	HIGH-HIGH TEMPERATURE DIFFERENCE ACROSS CRR BED P&ID 632764 TDY-C-160-4	YES	NO		NO	NO	NO ACTION	NO ACTION	NO	NO	NO	NO	NO	NO	NO
E25	HIGH-HIGH TEMPERATURE DIFFERENCE ACROSS DMR BED P&ID 632762 TDY-C-140-9	YES	NO		NO	NO	NO ACTION	NO ACTION	NO	NO	NO	NO	NO	NO	NO
E26	HIGH-HIGH TEMPERATURE AT OUTLET OF GAC BED (BOTH) P&ID 632798 TIT-SRH-141-007A (T-H-141-7A) TIT-SRH-141-007B (T-H-141-7B)	YES	NO		NO	YES (NOTE 3)	NO ACTION	NO ACTION	NO	NO	NO	NO	NO	NO	NO
E27	HIGH-HIGH PGF DIFFERENTIAL PRESSURE (DIFFERENCE) P&ID 632763 PIT-SRC-153-003 (P-C-153-3) PIT-SRC-140-007 (P-C-140-7) PD-C-153-1 10 SECOND DELAY	YES	NO		NO	NO	NO ACTION	NO ACTION	NO	NO	NO	NO	NO	NO	NO
E28	LOW-LOW FEED PUMP SEAL WATER TANK LEVEL P&ID 632760 LIT-SRC-231-003 (L-C-231-3)	YES	NO		NO	NO	NO ACTION	NO ACTION	NO	NO	NO	NO	NO	NO	NO
E29	INTENTIONALLY LEFT BLANK														
E30	GAC BED A RUPTURE DISK PRESSURE P&ID 632798 PIT-SRH-141-007A (P-H-141-7A)	YES	NO		NO	YES (NOTE 3)	NO ACTION	NO ACTION	NO	NO	NO	NO	NO	NO	NO
E31	GAC BED B RUPTURE DISK PRESSURE P&ID 632798 PIT-SRH-141-007B (P-H-141-7B)	YES	NO		NO	YES (NOTE 3)	NO ACTION	NO ACTION	NO	NO	NO	NO	NO	NO	NO
P1	LOW-LOW NITROGEN TANK LEVEL P&ID 632805 LIT-SRE-121-005 (L-E-121-5)	YES	NO		YES	NO	ON	NO ACTION	NO	NO	NO	NO	NO	NO	NO
P2	LOSS OF NITROGEN (BOTH) P&ID 632808 PIT-SRB-357-002A/B (P-B-357-2A/B) (NOTE 30)	YES (NOTE 14)	YES (NOTE 14)		YES (NOTE 21)	YES	OFF	ON	YES (NOTE 37)	YES (NOTE 37)	YES	YES	YES	NOTE 30	YES
P3	SEISMIC SWITCH (BOTH) P&ID 632759 XSH-NCC-023-1 (XSH-023-1C) XSH-NCC-023-2 (XSH-023-2C) (NOTE 1)	YES	YES		YES	YES (NOTE 3)	ON	NO ACTION	NO	NO	NO	NO	NO	NO	NO
P4	INTENTIONALLY LEFT BLANK														
P5	INTENTIONALLY LEFT BLANK														
P6	LOW-LOW DMR FLUIDIZING GAS TEMPERATURE (AVERAGE) P&ID 632801 TE-SRB-365-015 (T-B-365-15) TE-SRB-365-017 (T-B-365-17) (NOTE 5)	YES	NO		YES	NO	ON	NO ACTION	NO	NO	NO	NO	NO	NO	NO
P7	LOW-LOW OXYGEN SUPPLY (BOTH) P&ID 632813 PIT-SRB-146-003A/B (P-B-146-3A, 3B)	YES	NO		YES	NO	ON	NO ACTION	NO	NO	NO	NO	NO	NO	NO
P8	LOW-LOW OXYGEN TANK LEVEL P&ID 632805 L-E-124-5	YES	NO		YES	NO	ON	NO ACTION	NO	NO	NO	NO	NO	NO	NO
P9	LOW-LOW INTEC SUPPLIED COMPRESSED AIR PRESSURE (BOTH) P&ID 632816 PIT-SRB-166-002A/B (P-B-166-2A, 2B)	YES	YES		YES	YES (NOTE 3)	ON	NO ACTION	NO	NO	NO	NO	NO	NO	NO
P10	INTENTIONALLY LEFT BLANK														
P11	LOSS OF ELECTRICAL POWER P&ID 632799 JS-SRB-120-001 (JS-B-120-1)	YES (NOTE 14)	YES (NOTE 14)		YES (NOTE 21)	YES	OFF	ON	YES (NOTE 37)	YES (NOTE 37)	YES	YES	YES	NO	NO
P12	BLANK														
P13	BLANK														
P14	PRESSURE ACTIVATED DMR & PGF P&ID 632763 PIT-SRC-153-011 (P-C-153-11) (NOTE 30)	YES (NOTE 14)	YES (NOTE 14)		YES (NOTE 21)	YES	OFF	OFF (NOTE 11)	YES	YES	YES (NOTE 26)	YES	YES	NOTE 30	NO
P15	LOW-LOW SBW OFF-GAS BLOWERS MOTOR CURRENT (TIMED DELAYED) (BOTH) P&ID 632765 IT-SRH-260-001A/B (I-H-260-1A, 1B) (NOTE 5)	YES	YES		YES	YES (NOTE 3)	ON	NO ACTION	NO	NO	NO	NO	NO	NO	NO
P16	LOW-LOW PROCESS EXHAUST BLOWERS MOTOR CURRENT (TIMED DELAYED) (BOTH) P&ID 632799 IT-SRH-240-010A/B (I-H-240-10A, 10B) (NOTE 5)	YES	YES		YES	YES (NOTE 3)	ON	NO ACTION	NO	NO	NO	NO	NO	NO	NO
P17	HIGH-HIGH-HIGH DMR PRESSURE (BOTH) P&ID 632762 PIT-SRC-140-001 (P-C-140-1) PIT-SRC-140-007 (P-C-140-7) (NOTE 30)	YES (NOTE 14)	YES (NOTE 14)		YES (NOTE 21)	YES	OFF	OFF (NOTE 11)	YES	YES	YES (NOTE 26)	YES	YES	NOTE 30	NO
P18	INTENTIONALLY LEFT BLANK														
P19	INTENTIONALLY LEFT BLANK														
P20															
RESPONSE PRIORITY		"YES NOTE 14" HAS PRIORITY OVER "YES"	"YES NOTE 14" HAS PRIORITY OVER "YES"		"YES NOTE 21" HAS PRIORITY "YES"	"YES NOTE 24" HAS PRIORITY OVER "YES", "YES" HAS PRIORITY OVER "YES NOTE 3"	"OFF" HAS PRIORITY OVER "ON"	"OFF" HAS PRIORITY OVER "ON"	"YES" HAS PRIORITY OVER "YES NOTE 37"	"YES" HAS PRIORITY OVER "YES NOTE 37"				"NOTE 29" HAS PRIORITY OVER "NOTE 30"	

RSS RESPONSES / (NOTE 23) / INITIATING EVENT / SENSING INSTRUMENT (DCS TAG)	1	11	12	2	7	3	4	5	6	8	9	10	13	14
	SBW FEED CUT-OFF P&ID 632760	DMR WASTE FEED NOZZLE FLUSH WATER OFF P&ID 632760	INTENTIONALLY LEFT BLANK	STREAM CUT-OFF P&ID 632801	GAC BY-PASS P&ID 632798	FLUIDIZING NITROGEN FLOW ON, OFF OR NO ACTION P&ID 632801	DMR NITROGEN PURGE ON, OFF OR NO ACTION P&ID 632801	OXYGEN/AIR TO DMR CUT-OFF P&ID 632801/632761	OXYGEN/AIR TO CRR CUT-OFF P&ID 632764	COAL TO DMR CUT-OFF P&ID 632782	CARBON TO CRR CUT-OFF P&ID 632783	SUPERHEATER SHUTDOWN P&ID 632801	BLOWERS TO MANUAL	SHUTOFF AIR SOURCES TO OGF
	HV-SRC-140-021 (HS-C-140-21) HV-SRC-140-022 (HS-C-140-22) HV-SRC-140-023 (HS-C-140-23) FC-SRC-140-1 (FC-C-140-1) FC-SRC-140-2 (FC-C-140-2) FC-SRC-140-3 (FC-C-140-3) (NOTE 6)	HV-SRC-140-009F (HS-C-140-9F) HV-SRC-140-010F (HS-C-140-10F) HV-SRC-140-011F (HS-C-140-11F) HV-SRC-140-031 (HS-C-140-31) (NOTE 13)		HV-SRB-365-007 (HS-B-365-7) FV-SRB-365-005 (FC-B-365-5) (NOTE 6 AND 38)	HV-SRH-141-014A/B (HS-H-141-14A, 14B) OPEN HV-SRH-141-011A (HS-H-141-11A) CLOSED (NOTE 20)	UNLESS NOTED BELOW, THE NITROGEN RSS WILL SET THE NITROGEN FLOW RATE VIA FC-B-365-2 (NOTE 25 AND 39)	(NOTES 5 AND 35)	HV-SRB-365-010 (HS-B-365-10) HV-SRC-540-003 (HS-C-540-3) FV-SRB-365-009 (FC-B-365-9) FV-SRC-540-011 (FC-C-540-11) FV-SRC-540-012 (FC-C-540-12) FV-SRC-540-013 (FC-C-540-13) (NOTE 6)	HV-SRC-160-014 (HS-C-160-14) OXYGEN HV-SRC-160-015 (HS-C-160-15) AIR FV-SRC-160-006 (FC-C-160-6) OXYGEN FV-SRC-160-007 (FC-C-160-7) OXYGEN FV-SRC-160-008 (FC-C-160-8) AIR FV-SRC-160-009 (FC-C-160-9) AIR FV-SRC-160-010 (FC-C-160-10) FV-SRC-160-012 (FC-C-160-12) (NOTE 10)	SET HS-C-637-1 TO STOP	SET HS-C-639-1 TO STOP	TC-B-365-1 HS-B-365-21	SEE NOTES 29 AND 30	SEE NOTE 31
P21 HIGH-HIGH-HIGH CRR PRESSURE (BOTH) P&ID 632764 PIT-SRC-760-010 (P-C-760-10) PIT-SRC-760-016 (P-C-760-16) (NOTE 30 AND 31)	YES (NOTE 14)	YES (NOTE 14)		YES (NOTE 21)	YES	OFF	ON	YES (NOTE 37)	YES (NOTE 37)	YES	YES	YES	NOTE 30	YES
P22 HIGH-HIGH FLUIDIZING GAS PRESSURE P&ID 632801 PIT-SRB-365-011A (P-B-365-11A) OR PIC-SRB-140-001 (PSH-B-140-1) OR PIC-SRB-140-002 (PSH-B-140-2) (NOTE 30)	YES (NOTE 14)	YES (NOTE 14)		YES (NOTE 21)	YES	OFF	ON	YES	YES	YES	YES	YES	NOTE 30	NO
P23 MANUAL SHUTDOWN SWITCH (ANY) P&ID 632799 HS-SRB-135-001, 002 HS-B-135-3 (HMI VERSION)	YES	YES		YES	YES (NOTE 3)	ON	NO ACTION	NO	NO	NO	NO	NO	NO	NO
P24 PRESSURE RELIEF ACTIVATED OFF-GAS COOLER P&ID 632766 PSH-SRC-160-013 (PSH-C-160-13) (NOTE 30 AND 31)	YES (NOTE 14)	YES (NOTE 14)		YES (NOTE 21)	YES	OFF	ON	YES (NOTE 37)	YES (NOTE 37)	YES	YES	YES	NOTE 30	YES
P25 PRESSURE RELIEF ACTIVATED HEPA FILTER INLET P&ID 632797 PSH-SRH-140-009 (PSH-H-140-9) OR PSH-SRH-140-008 (PSH-H-140-8) (NOTE 30 AND 31)	YES (NOTE 14)	YES (NOTE 14)		YES (NOTE 21)	YES	OFF	ON	YES (NOTE 37)	YES (NOTE 37)	YES	YES	YES	NOTE 30	YES
P26 HIGH-HIGH OFF GAS COOLER TEMPERATURE (EITHER) TIME DELAYED 3 MINUTES. TEMPERATURE MUST EXCEED HIGH HIGH 3 MINUTES, IF IT DROPS BELOW HIGH HIGH WITHIN 3 MINUTES THEN NO ACTION P&ID 632766 TE-SRC-160-001A, -001B (T-C-160-1A, 1B) (NOTE 30)	YES (NOTE 14)	YES (NOTE 14)		YES (NOTE 21)	YES	OFF	ON	YES	YES	YES	YES	YES	NOTE 30	NO
P27 MANUAL SHUTDOWN SWITCH (ANY) WITHIN 15 MINUTES TIME DELAY HS-SRB-135-001, HS-SRB-135-002 HS-B-135-3 (HMI VERSION)	YES (NOTE 14)	YES (NOTE 14)		YES (NOTE 21)	YES	OFF	ON	YES (NOTE 37)	YES (NOTE 37)	YES	YES	YES	NOTE 30	YES
P28 HIGH HIGH TEMPERATURE DIFFERENCE BETWEEN DMR NECK TEMP AND FLUIDIZING GAS TEMP P&ID 632762 TE-SRC-365-020, -021 (T-C-365-20, 21) TE-SRC-140-017, -018 (T-C-365-17, 18) (TDY-C-140-20)	YES (NOTE 14)	YES (NOTE 14)		YES (NOTE 21)	YES	OFF	ON	YES (NOTE 37)	YES (NOTE 37)	YES	YES	YES	NO	NO
RESPONSE PRIORITY	"YES NOTE 14" HAS PRIORITY OVER "YES"	"YES NOTE 14" HAS PRIORITY OVER "YES"		"YES NOTE 21" HAS PRIORITY "YES"	"YES NOTE 24" HAS PRIORITY OVER "YES", "YES" HAS PRIORITY OVER "YES NOTE 3"	"OFF" HAS PRIORITY OVER "ON"	"OFF" HAS PRIORITY OVER "ON"	"YES" HAS PRIORITY OVER "YES NOTE 37"	"YES" HAS PRIORITY OVER "YES NOTE 37"				"NOTE 29" HAS PRIORITY OVER "NOTE 30"	

SIZE	INDEX CODE NUMBER					DWG-	REV
E	AREA	TYPE	CI	DISC		632755	18
	200	1696	24	136			
SCALE: NONE					SHEET	5	

File: 632755-18.dwg
Path: K:\WTU\DRF-35925
Date: 06/13/18 - 11:41 AM Layout Name: 632755-Sht 5
ID: KEYAL

FMT-E1-REV 4.2

THIS MARKUP COVERS CHANGES APPROVED ON THE FOLLOWING FDCs:

FDC-11473

INSTRUMENTATION IDENTIFICATION SYMBOLS

	FIRST-LETTER (4)		SUCCEEDING-LETTERS (3)		
	MEASURED OR INITIATING VARIABLE	MODIFIER	READOUT OR PASSIVE FUNCTION	OUTPUT FUNCTION	MODIFIER
A	ANALYSIS (5,19)		ALARM		
B	BURNER, COMBUSTION		USER'S CHOICE (1)	USER'S CHOICE (1)	USER'S CHOICE (1)
C	CONDUCTIVITY			CONTROL (13)	CLOSE (16)
D	DENSITY OR SPG	DIFFERENTIAL (4)			
E	VOLTAGE		SENSOR (PRIMARY ELEMENT)		
F	FLOW RATE	RATIO (FRACTION)(4)			
G	USER'S CHOICE (1)		GLASS, VIEWING DEVICE (9)		
H	HAND				HIGH (7,15,16)
I	CURRENT (ELECTRICAL)		INDICATE (10)		
J	POWER	SCAN (7)			
K	TIME, TIME SCHEDULE	TIME RATE OF CHANGE (4,21)			
L	LEVEL		LIGHT (11)		LOW (7,15,16)
M	MOISTURE	MOMENTARY (4)			MIDDLE, INTER-MEDIATE (7,15)
N	USER'S CHOICE (1)		USER'S CHOICE (1)	USER'S CHOICE (1)	USER'S CHOICE (1)
O	USER'S CHOICE (1)		ORIFICE, RESTRICTION		OPEN (16)
P	PRESSURE, VACUUM		POINT (TEST) CONNECTION		
Q	QUANTITY	INTEGRATE TOTALIZE (4)			
R	RADIATION (22)		RECORD (17)		
S	SPEED, FREQUENCY	SAFETY (6)		SWITCH (13)	
T	TEMPERATURE			TRANSMIT (18)	
U	MULTIVARIABLE (6)		MULTIFUNCTION (12)	MULTIFUNCTION (12)	MULTIFUNCTION (12)
V	VISCOSITY			VALVE, DAMPER, LOUVER (13)	
W	WEIGHT, FORCE		WELL		
X	VIBRATION (19)	X AXIS	UNCLASSIFIED	UNCLASSIFIED	UNCLASSIFIED
Y	EVENT, STATE OR PRESENCE (20)	Y AXIS		RELAY, COMPUTE, CONVERT (13,14,15)	
Z	POSITION/DIMENSION	Z AXIS		DRIVER, ACTUATOR, UNCLASSIFIED FINAL CONTROL ELEMENT	

NUMBERS IN PARENTHESES REFER TO EXPLANATORY NOTES BELOW

NOTES

1. A "USER'S CHOICE" LETTER IS INTENDED TO COVER UNLISTED MEANINGS THAT WILL BE USED REPETITIVELY IN A PARTICULAR PROJECT IF USED. THE LETTER MAY HAVE ONE MEANING AS A FIRST-LETTER AND ANOTHER MEANING AS A SUCCEEDING-LETTER. THE MEANINGS NEED TO BE DEFINED ONLY ONCE IN A LEGEND, OR OTHER PLACE, FOR THAT PROJECT. FOR EXAMPLE, THE LETTER N MAY BE DEFINED AS "MODULUS OF ELASTICITY" AS A FIRST-LETTER AND "OSCILLOSCOPE" AS A SUCCEEDING-LETTER.
2. TEXT LOCATIONS AROUND AN INSTRUMENT BALLOON:

   J1-J2 J3-J4/5

   J-1: ISA CODE (INSTRUMENT FUNCTIONAL IDENTIFIER)
   J-2: AREA DESIGNATION NUMBER
   J-3: TEAM MEMBER
   J-4: SEQUENTIAL NUMBER FOR TEAM MEMBER
   J-5: ALPHA IDENTIFIER FOR REDUNDANT/STANDY EQUIPMENT
3. THE GRAMMATICAL FORM OF THE SUCCEEDING-LETTER MEANINGS MAY BE MODIFIED AS REQUIRED. FOR EXAMPLE, "INDICATE" MAY BE APPLIED AS "INDICATOR" OR "INDICATING", TRANSMIT" AS "TRANSMITTER" OR "TRANSMITTING," ETC.
4. ANY FIRST-LETTER, IF USED IN COMBINATION WITH MODIFYING LETTERS D (DIFFERENTIAL), F (RATIO), M (MOMENTARY), K (TIME RATE OF CHANGE), Q (INTEGRATE OR TOTALIZE), OR ANY COMBINATION OF THESE IS INTENDED TO REPRESENT A NEW AND SEPARATE MEASURED VARIABLE, AND THE COMBINATION IS TREATED AS A FIRST-LETTER ENTITY. THUS, INSTRUMENTS TDI AND TI INDICATE TWO DIFFERENT VARIABLES, NAMELY, DIFFERENTIAL-TEMPERATURE AND TEMPERATURE MODIFYING LETTERS ARE USED WHEN APPLICABLE.

   FOR EXAMPLE:

   FQR – FLOW TOTALIZER RECORDER
   PDT – PRESSURE DIFFERENTIAL TRANSMITTER
   PDC – PRESSURE DIFFERENTIAL CONTROLLER
   WFIC – WEIGHT RATIO INDICATING CONTROLLER
   WFY – WEIGHT RATIO RELAY
   WIR – WEIGHT INDICATING RECORDER
   WQT – WEIGHT INTEGRATING TRANSMITTER
   WQI – WEIGHT TOTALIZING INDICATOR
   WQC – WEIGHT TOTALIZING CONTROLLER
   WQY – WEIGHT TOTALIZING RELAY
   XAHH – ALARM HIGH HIGH
   XALL – ALARM LOW LOW
   YIA – EVENT INDICATING ALARM

   SPECIAL PROJ. CODE LETTERS

   ZSO–POSITION SWITCH = VALVE OPEN
   ZSC–POSITION SWITCH = VALVE CLOSED
   ZO*–POSITION LIGHT = VALVE OPEN
   ZC*–POSITION LIGHT = VALVE CLOSED.

   *THESE ARE INDICATED ON THE PCS HMI SCREENS, THERE ARE NO LIGHTS.
5. FIRST-LETTER A (ANALYSIS) COVERS ALL ANALYSES NOT DESCRIBED BY A "USER'S CHOICE" LETTER. IT IS EXPECTED THAT THE TYPE OF ANALYSIS WILL BE DEFINED OUTSIDE A TAGGING BUBBLE.
6. USE OF FIRST-LETTER U FOR "MULTIVARIABLE" IN LIEU OF A COMBINATION OF FIRST-LETTERS IS OPTIONAL. IT IS RECOMMENDED THAT NONSPECIFIC VARIABLE DESIGNATORS SUCH AS U BE USED SPARINGLY.
7. THE USE OF MODIFYING TERMS "HIGH," "LOW," "MIDDLE," OR "INTERMEDIATE," AND "SCAN" IS OPTIONAL.
8. THE TERM "SAFETY" APPLIES TO EMERGENCY PROTECTIVE PRIMARY ELEMENTS AND EMERGENCY PROTECTIVE FINAL CONTROL ELEMENTS ONLY. THUS, A SELF-ACTUATED VALVE THAT PREVENTS OPERATION OF A FLUID SYSTEM AT A HIGHER-THAN-DESIRED PRESSURED BY BLEEDING FLUID FROM THE SYSTEM IS A BACKPRESSURE-TYPE PCV EVEN IF THE VALVE IS NOT INTENDED TO BE USED NORMALLY, HOWEVER, THIS VALVE IS DESIGNATED AS A PSV IF IT IS INTENDED TO PROTECT AGAINST EMERGENCY CONDITIONS, I.E., CONDITIONS THAT ARE HAZARDOUS TO PERSONNEL AND/OR EQUIPMENT AND THAT ARE NOT EXPECTED TO ARISE NORMALLY.

   THE DESIGNATION PSV APPLIES TO ALL VALVES INTENDED TO PROTECT AGAINST EMERGENCY PRESSURE CONDITIONS REGARDLESS OF WHETHER THE VALVE CONSTRUCTION AND MODE OF OPERATION PLACE THEM IN THE CATEGORY OF THE SAFETY VALVE, RELIEF VALVE, OR SAFETY RELIEF VALVE. A RUPTURE DISC IS DESIGNATED PSE.
9. THE PASSIVE FUNCTION G APPLIES TO INSTRUMENTS OR DEVICES THAT PROVIDE AN UNCALIBRATED VIEW, SUCH AS SIGHT GLASSES AND TELEVISION MONITORS.
10. "INDICATE" NORMALLY APPLIES TO THE READOUT-ANALOG OR DIGITAL-OF AN ACTUAL MEASUREMENT. IN THE CASE OF A MANUAL LOADER, IT MAY BE USED FOR THE DIAL OR SETTING INDICATION, I.E., FOR THE VALUE OF THE INITIATING VARIABLE.
11. A PILOT LIGHT THAT IS PART OF AN INSTRUMENT LOOP SHOULD BE DESIGNATED BY A FIRST-LETTER FOLLOWED BY THE SUCCEEDING-LETTER L FOR EXAMPLE, A PILOT LIGHT THAT INDICATES AN EXPIRED TIME PERIOD SHOULD BE TAGGED KQL. IF IT IS DESIRED TO TAG A PILOT LIGHT THAT IS NOT PART OF AN INSTRUMENT LOOP, THE LIGHT IS DESIGNATED IN THE SAME WAY. FOR EXAMPLE, A RUNNING LIGHT FOR AN ELECTRIC MOTOR MAY BE TAGGED EL, ASSUMING VOLTAGE TO BE THE APPROPRIATE MEASURE VARIABLE, OR YL, ASSUMING THE OPERATING STATUS IS BEING MONITORED.
12. USE OF A SUCCEEDING-LETTER U FOR "MULTIFUNCTION" INSTEAD OF A COMBINATION OF OTHER FUNCTIONAL LETTERS IS OPTIONAL. THIS NONSPECIFIC FUNCTION DESIGNATOR SHOULD BE USED SPARINGLY.
13. A DEVICE THAT CONNECTS, DISCONNECTS, OR TRANSFERS ONE OR MORE CIRCUITS MAY BE EITHER A SWITCH, A RELAY, AN ON-OFF CONTROLLER, OR A CONTROL VALVE, DEPENDING ON THE APPLICATION.

   IF THE DEVICE MANIPULATES A FLUID PROCESS STREAM AND IS NOT A HAND-ACTUATED ON-OFF BLOCK VALVE, IT IS DESIGNATED AS A CONTROL VALVE. IT IS <u>INCORRECT TO USE THE SUCCEEDING-LETTERS CV FOR ANYTHING OTHER THAN A SELF-ACTUATED CONTROL VALVE.</u> FOR ALL APPLICATIONS OTHER THAN FLUID PROCESS STREAMS, THE DEVICE IS DESIGNATED AS FOLLOWS:

   A SWITCH, IF IT IS ACTUATED BY HAND.

   A SWITCH OR AN ON-OFF CONTROLLER, IF IT IS AUTOMATIC AND IS THE FIRST SUCH DEVICE IN A LOOP. THE TERM "SWITCH" IS GENERALLY USED IF THE DEVICE IS USED FOR ALARM, PILOT LIGHT, SELECTION, INTERLOCK, OR SAFETY.

   THE TERM "CONTROLLER" IS GENERALLY USED IF THE DEVICE IS USED FOR NORMAL OPERATING CONTROL.

   A RELAY, IF IT IS AUTOMATIC AND IS NOT THE FIRST SUCH DEVICE IN A LOOP, I.E. IT IS ACTUATED BY A SWITCH OR AN ON-OFF CONTROLLER.
14. IT IS EXPECTED THAT THE FUNCTIONS ASSOCIATED WITH THE USE OF SUCCEEDING-LETTER Y WILL BE DEFINED OUTSIDE A BUBBLE ON A DIAGRAM WHEN FURTHER DEFINITION IS CONSIDERED NECESSARY. THIS DEFINITION NEED NOT BE MADE WHEN THE FUNCTION IS SELF-EVIDENT, AS FOR A SOLENOID VALVE IN A FLUID SIGNAL LINE.
15. THE MODIFYING TERMS "HIGH" AND "LOW," AND "MIDDLE" OR "INTERMEDIATE" CORRESPOND TO VALUES OF THE MEASURED VARIABLE, NOT TO VALUES OF THE SIGNAL, UNLESS OTHERWISE NOTED. FOR EXAMPLE, A HIGH-LEVEL ALARM DERIVED FROM A REVERSE-ACTING LEVEL TRANSMITTER SIGNAL SHOULD BE AN LAH, EVEN THOUGH THE ALARM IS ACTUATED WHEN THE SIGNAL FALLS TO ALLOW VALUE. THE TERMS MAY BE USED IN COMBINATIONS AS APPROPRIATE. (SEE SECTION 6.9A. OF ISA 5.1-84)
16. THE TERMS "HIGH" AND "LOW," SHOULD NOT BE APPLIED TO POSITIONS OF VALVES AND OTHER OPEN-CLOSE DEVICES. "OPEN" AND "CLOSE" SHOULD BE USED INSTEAD.
17. THE WORD "RECORD" APPLIES TO ANY FORM OF PERMANENT STORAGE OF INFORMATION THAT PERMITS RETRIEVAL BY ANY MEANS.
18. FOR USE OF THE TERM "TRANSMITTER" VERSUS "CONVERTER," SEE THE DEFINITIONS IN SECTION 3 OF ISA 5.1-84.
19. FIRST-LETTER X "VIBRATION OR MECHANICAL ANALYSIS," IS INTENDED TO PERFORM THE DUTIES IN MACHINERY MONITORING THAT THE LETTER A PERFORMS IN MORE GENERAL ANALYSES. EXCEPT FOR VIBRATION, IT IS EXPECTED THAT THE VARIABLE OF INTEREST WILL BE DEFINED OUTSIDE THE TAGGING BUBBLE.
20. FIRST-LETTER Y IS INTENDED FOR USE WHEN THE CONTROL OR MONITORING RESPONSES ARE EVENT-DRIVEN AS OPPOSED TO TIME-OR TIME SCHEDULE-DRIVEN. THE LETTER Y, IN THIS POSITION, CAN ALSO SIGNIFY PRESENCE OR STATE.
21. MODIFYING-LETTER K, IN COMBINATION WITH A FIRST-LETTER SUCH AS I, T, OR W, SIGNIFIES A TIME RATE OF CHANGE OF THE MEASURED OR INITIATING VARIABLE. THE VARIABLE WKIC, FOR INSTANCE, MAY REPRESENT A RATE-OF-WEIGHT-LOSS CONTROLLER.
22. SEE NOTE 2 FOR TABLE 1, ZONE 7H.
23. THIS INSTRUMENT IDENTIFICATION SYSTEM IS BASED ON "INSTRUMENT SOCIETY OF AMERICA" (ISA) INSTRUMENTATION SYMBOLS AND IDENTIFICATION STANDARD S5.1-84.
24. USE THIS DRAWING IN CONJUNCTION WITH THE FOLLOWING "LEGEND AND SYMBOLS" DRAWINGS:

    632756 SYMBOLS AND NOMENCLATURE SHEET 1
    632757 SYMBOLS AND NOMENCLATURE SHEET 2

GENERAL NOTES:

1. INTEC INSTRUMENTATION SYMBOLOGY SHALL BE BASED ON ISA STANDARD 51-84 WITH TABLES I, II AND III ON THIS DRAWING REPLACING TABLE I, SECTION 6.2 AND SECTION 6.3 OF THAT STANDARD, FOR ADDITIONAL NOTES AND EXAMPLE SYMBOL LAYOUTS SEE ISA STANDARD 5.1-84.
2. SEE DRAWING 056361 FOR PIPING, VALVE AND ACTUATOR SYMBOLS. FOR GUIDELINES IN MAKING LOOP DIAGRAMS SEE DRAWINGS 093630 THRU 093634.
3. A COMPLETE INSTRUMENT IDENTIFICATION NUMBER FOR INTEC IS CONSTRUCTED AS FOLLOWS: EXAMPLE SYMBOL LAYOUTS SEE ISA STANDARD 5.1-84.

FIT-SRB-216-002A

- SUFFIX PER ISA 5.1-84, PARA. 4.3.3.
- SEQUENTIAL NUMBER
- TEAM MEMBER FROM INTEC ENGINEERING
- AREA DESIGNATION FROM INTEC ENGINEERING. SEE DWG.0557H
- INSTRUMENT FUNCTION FROM TABLE

TEAM MEMBER LIST

TEAM MEMBER	DESCRIPTION
100	VESSELS, COLUMNS, FILTERS, SLUG CHUTES, SEPTIC TANKS, SPRAY COOLER, SEPARATORS, TANKS, THE DMR, AND THE CRR
200	PUMPS, BLOWERS, MOTORS, UNIT HEATERS, COMPRESSORS
300	HEAT EXCHANGERS, FURNACES, OVENS, HEATING COILS, MIXING CHAMBERS, PROCESS HEATERS, BOILERS, DRIERS, SUPERHEATERS
400	ROTATING, MECHANICAL EQUIPMENT, MOTORIZED ROLLUP DOORS, AGITATOR, AUGERS, GRINDERS
500	JETS, INJECTORS, EDUCTORS
600	AIRLIFTS
600	SAMPLERS, HOODS, GLOVE BOXES, CAVES, AIRLOCKS, TABLES, CABINETS, STRAINERS, BAGS, SPRAY BOOTHS, ACTS DRUM FILLING STATIONS
700	BURETTES, AIR HANDLING UNITS, PLENUMS, DAMPERS, AIR-COOLED CONDENSERS, WATER CHILLERS, FIRE SUPPRESSION SYSTEMS
800	FUNNELS, HOPPERS, YOKES, SOLIDS HANDLING HOPPERS, FEEDERS
900	SPECIAL MECHANICAL EQUIPMENT, CRANES, HOISTS, CASKS, NONMOTORIZED DOORS, CONTROL PANELS, SHIELDING BELL

DIAPHRAGM
PISTON
PISTON W/ MANUAL OPERATOR
MOTOR
PNEUMATIC
HYDRAULIC
SOLENOID
ELECTRO-HYDRAULIC
HANDJACK OR HANDWHEEL
SOLENOID LINEAR VALVE
DIAPHRAGM WITH POSITIONER
SELF CONTAINED PRESSURE REGULATOR
SELF CONTAINED BACK PRESSURE REGULATOR
FLOW CONTROL VALVE
VACUUM/PRESSURE RELIEF VALVE (TYPICAL)
PRESSURE RELIEF VALVE
VACUUM RELIEF VALVE
RUPTURE DISC
SURFACE MOUNTED THERMOCOUPLE
SURFACE MOUNTED THERMOWELL
THERMOWELL
V-CONE FLOW ELEMENT

TYPICAL INSTRUMENTATION SYMBOLS

- J1-J2 J3-J4 — LOCALLY MOUNTED INSTRUMENT
- J1-J2 J3-J4 — CONTROL ROOM MOUNTED INSTRUMENT
- J1-J2 J3-J4 — LOCAL PANEL MOUNTED INSTRUMENT COMPUTER SHARED DISPLAY AND CONTROL
- J1-J2 J3-J4 — SHARED DISPLAY/SHARED CONTROL
- J1-J2 J3-J4 — DCS FUNCTION NOT ACCESSIBLE TO OPERATOR
- I J3-J4 — HARDWIRED LOGIC
- I J3-J4 — DIGITAL LOGIC CONTROLS INTEGRAL TO THE DCS
- XX-AAA TTT-NNN — VENDOR TO DCS INTERFACE
- I EVAC — SIGNAL TO EVACUATION SYSTEM
- I FIRE — SIGNAL FROM FIRE PROTECTION SYSTEM NOTE 4
- I RSS — DIGITAL LOGIC CONTROLS INTEGRAL TO THE DCS (S) SAFETY (E) ENVIRONMENTAL (P) PROCESS
- FG-J2 J3-J4 — FLOW GLASS
- M — FLOW METER
  - M = MAGNETIC
  - S = SONIC
  - C = CORIOLIS (MASS) FDC-11473
  - ~~TH = THERMAL (MASS)~~
  - DP = DIFFERENTIAL PRESSURE (MASS)
- ~~POS~~ OR TURBINE METER
- FE-J2 J3-J4 — FLOW ORIFICE
- FO-J2 J3-J4 — FLOW RESTRICTION ORIFICE
- XY-XX XX-XX I/P — CURRENT TO PRESSURE TRANSDUCER
- XY-XX XX-XX I/I — CURRENT TO CURRENT TRANSDUCER
- HIGH SELECT
- LOW SELECT
- XX-AAA TTT-NNN — <u>QUALIFIERS</u> (NOTE 3) SEL=SELECT ACTIVE TRANSMITTER SCHEMA AVE=AVERAGING 25%=25% OF VALUE
- VORTEX SHEDDING FLOW METER
- FLOW ORIFICE (WELDED)
- VACUUM BREAKER
- FI-J2 J3-J4 — VARIABLE AREA FLOW INDICATOR (ROTAMETER)
- LIT-J2 J3-J4 — LEVEL INDICATING TRANSMITTER (CONTACT)
- LIT-J2 J3-J4 — LEVEL INDICATING TRANSMITTER, RADAR, RF, ULTRASONIC (NON-CONTACT)
- DIAPHRAGM SEAL
- FLOW NOZZLE OR VCONE
- STRAIGHTENING VANES
- OR — ANNULAR TYPE AVERAGING FLOW ELEMENT
- J1-J2 J3-J4 X — PILOT LIGHT OR BEACON X = COLOR CODE (SEE COLOR CODE TABLE)
- IA 000 — INSTRUMENT AIR PURGE PANEL SEQUENCE NUMBER AND LOCATION
- TP XX — TIE POINT
- ESD — HARDWIRED EMERGENCY STOP LOGIC
- N — INSTRUMENT NITROGEN PURGE (NOTE 1)
- N2 — SOLIDS VALVE NITROGEN PURGE (NUMBER FROM VALVE BEING PURGED) (NOTE 1)
- N2 TTT-NNNP — LINE PURGE W/O METERING (NOTE 1)
- N2 M TTT-NNNP — LINE PURGE W/ METERING (NOTE 1)
- N2 MS TTT-NNNP — LINE PURGE W/ METERING AND PULSE (NOTE 1)
- IA REF AAA-TTT-NNNR — O2 SENSOR REFERENCE PURGE (NOTE 2)
- O2 CAL AAA-TTT-NNNY — O2 SENSOR CALIBRATION PURGE (NOTE 2)
- IA M — INSTRUMENT AIR LINE PURGE W/ METERING (NOTE 1)

AREA

SRB = STEAM REFORMER BULK CHEMICAL AREA
SRC = STEAM REFORMER CELL
SRE = STEAM REFORMER EXTERNAL AREAS
SRH = STEAM REFORMER HVAC
SRS = STEAM REFORMER STORAGE
NCC = NWCF

INSTRUMENT ABBREVIATIONS

AVE	AVERAGE
CAB	ELECTRONICS CABINET
CAS	CASCADE CONTROL
CCTV	CLOSED CIRCUIT TV
CEMS	CONTINUOUS EMISSIONS MONITORING SYSTEM
COMM	COMMUNICATION
CP	CONTROL PANEL
CPU	CENTRAL PROCESSING UNIT (COMPUTER)
DCS	DISTRIBUTED CONTROL SYSTEM
DMS	DATA MANAGEMENT SYSTEM
DRV	DISK DRIVE
EO	ENERGIZE TO OPEN
ES	ELECTRICAL SUPPLY
ESD	EMERGENCY STOP DEVICE
EWS	ENGINEERING WORKSTATION
FC	FAIL CLOSED
FL	FAIL LAST
FO	FAIL OPEN
F/R	FORWARD REVERSE
HOA	HAND/OFF/AUTO
IR	INFRARED (SENSOR)
LOR	LOCAL/OFF/REMOTE
O/C	OPEN/CLOSE
OWS	OPERATOR WORKSTATION
PCU	PROCESS CONTROL UNIT
PE	PHOTO ELECTRIC (SENSOR)
PF	FIRE PANEL
POS	POSITION
PTR	PRINTER
RMS	RADIOLOGICAL MONITORING SYSTEM
SA	STACK SAMPLER
SD	SHUTDOWN
SP	SET POINT
ST/SP	START/STOP
TCJ	TV CAMERA CONTROL JUNCTION BOX
TCK	TV CAMERA CONTROL KEYBOARD
TVC	TELEVISION CAMERA
TVM	TELEVISION VIDEO MATRIX
VAC	VACUUM
VCR	VIDEO CASSETTE RECORDER
VFD	VARIABLE FREQUENCY DRIVE

PILOT LIGHT DESIGNATIONS

R	RED	UNSAFE	EMERGENCY, DANGER, HIGH PRIORITY ALARM, CLOSED/OFF/STOPPED (INACTIVE) CLOSED/ON/FLOWING (ELECTRICAL POWER DISTRIBUTION) 1
Y	YELLOW	CAUTION	HAZARD SECOND PRIORITY ALARM ABNORMAL STATE
G	GREEN	SAFE	SAFE, SATISFACTORY, OPEN/ON/FLOWING (ACTIVE) OPEN/OFF/STOPPED (ELECTRICAL POWER DISTRIBUTION) 1
LB	LIGHT BLUE (CYAN)	STATIC AND SIGNIFICANT	EQUIPMENT IN SERVICE MAJOR LABELS
DB	DARK BLUE	NON ESSENTIAL	EQUIPMENT IN STANDBY
M	MAGENTA	RADIATION	RADIATION ALARM/CAUTION
W	WHITE	DYNAMIC DATA	MEASUREMENT AND STATE INFORMATION SYSTEM MESSAGES TREND ACTIVE SEQUENCE STEP

1. THE ASSOCIATED COLOR MEANINGS ARE FOR ELECTRICAL POWER DISTRIBUTION SYSTEM DISPLAYS ONLY.

NOTES

1. SEE NITROGEN TYPICAL ON DWG. 632758.
2. SEE O2 SENSOR TYPICAL ON DWG. 633029.
3. SEE SDD-ITWU-019 CONCERNING DETAILED LOGIC FOR DCS SYMBOL QUALIFIERS.
4. SEE FIRE PROTECTION ONE LINE DIAGRAM 634381.

REV	DESCRIPTION
7	AS BUILT AS OF 10-5-2011, PRIOR HISTORY REMOVED, SEE DRF-334548

REVISION HISTORY

NO SCALE

DESIGN PHASE:	
QUALITY LEVEL:	4
HORIZONTAL SCALE	NONE
VERTICAL SCALE	NA

FOR DRAWING INDEX SEE DRAWING NO. 632756

SIGNATURES/DATES APPLY TO CURRENT RELEASE ONLY	SIGN AND DATE
DESIGN: NA	– –
DRAFTER: A. KEY	Angela Key CWI 2011.10.11 17:17:41 -06'00'
TECHNICAL CHECK: NA	– –
ENG GROUP SUPERVISOR: NA	– –
DESIGN LEAD: NA	– –
DRAFTING CHECK/ EFFECTIVE DATE: K. KELLER	Kris Keller CWI 2011.10.11 17:45:46 -06'00'

CH2M•WG IDAHO, LLC

Idaho Cleanup Project

INTEC CPP-1696
PIPING AND INSTRUMENT DIAGRAM
SYMBOLS AND NOMENCLATURE

SYMBOLS

PROJECT NUMBER: 25051

INDEX CODE NUMBER			
AREA	TYPE	CL	ORIG
200	1696	24	136

SIZE E DWG- 632757 REV 7 F1

DRF NO. -- SHEET P-8

File: 632757-7.dwg Date: 10/11/11 - 10:59 AM Layout Name: Layout1 ID: KEYAL
Path: V:_Vault\Designs\IWTU\STATE AS BUILT 10-14-2011\DRF-334548

TYPICAL MOTOR CONTROL

480V MOTOR WITH VFD CONTROL

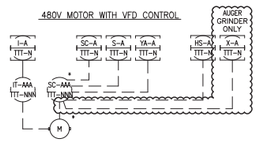

INPUTS/OUTPUTS	SIGNAL LIST	DCS LIST
AO	MOTOR SPEED COMMAND	SC-AA-TTT-NNN / SC-A-TTT-N
AI	MOTOR CURRENT	IT-AA-TTT-NNN / I-A-TTT-N
AI	VFD SPEED	S-AAA-TTT-NNN / S-A-TTT-N
DO	VFD RUN	HS-AAA-TTT-NNN / HS-A-TTT-N
DI	VFD NO FAULT	YA-AAA-TTT-NNN / YA-A-TTT-N
AUGER GRINDER ONLY		
AI	MOTOR TORQUE	X-AAA-TTT-NNN / X-A-TTT-N

480V MOTOR WITH VFD FORWARD/REVERSE CONTROL

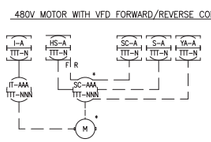

INPUTS/OUTPUTS	SIGNAL LIST	DCS LIST
AO	MOTOR SPEED COMMAND	SC-AA-TTT-NNN / SC-A-TTT-N
AI	MOTOR CURRENT	IT-AA-TTT-NNN / I-A-TTT-N
AI	VFD SPEED	S-AAA-TTT-NNN / S-A-TTT-NA
DO	VFD RUN FORWARD	HS-AAA-TTT-NNNF / HS-A-TTT-NX
DO	VFD RUN REVERSE	HS-AAA-TTT-NNNR / HS-A-TTT-NX
DI	VFD NO FAULT	YA-AAA-TTT-NNN / SC-A-TTT-N

* MINIMUM SHOWN ON P&ID

480V MOTOR STARTER

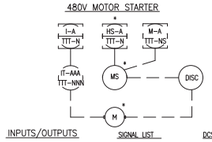

INPUTS/OUTPUTS	SIGNAL LIST	DCS LIST
AI	MOTOR CURRENT	IT-AAA-TTT-NNN / I-A-TTT-N
DO	MOTOR RUN	HS-AAA-TTT-NNN / HS-A-TTT-N
DI	MOTOR RUNNING	M-AAA-TTT-NNN / M-A-TTT-N

120V MOTOR CONTACTOR

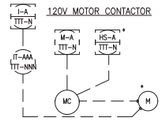

INPUTS/OUTPUTS	SIGNAL LIST	DCS LIST
DO	MOTOR RUN	HS-AAA-TTT-NNN / HS-A-TTT-N
DI	MOTOR RUNNING	M-AAA-TTT-NNN / HS-A-TTT-N
AI	MOTOR CURRENT	IT-AAA-TTT-N / I-A-TTT-N

LEGEND FOR MOTOR CONTROL

AAA AREA DESIGNATION
TTT TEAM MEMBER DESIGNATION
NNN SAME AS ASSOCIATED CONTROLLER
A LAST CHARACTER OF AREA DESIGNATION
N NNN WITH NO LEADING ZEROES
MS MOTOR STARTER – TAG BY ELECTRICAL
M MOTOR – TAG BY ELECTRICAL
MC MOTOR CONTACTOR 120 VAC

TYPICAL PNEUMATIC VALVE POSITION SWITCHES

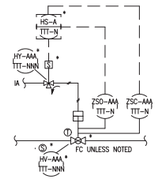

INPUTS/OUTPUTS	INSTRUMENT LIST	DCS LIST
DO SOLENOID VALVE	HY-AAA-TTT-NNN	HS-A-TTT-N
DI VALVE OPENED	ZSO-AAA-TTT-NNN	ZO-A-TTT-N
DI VALVE CLOSED	ZSC-AAA-TTT-NNN	ZC-A-TTT-N
BLOCK VALVE	HV-AAA-TTT-NNN	
DI BODY OPEN	ZSO-AAA-TTT-NNNA	ZO-A-TTT-NA
DI BODY CLOSED	ZSC-AAA-TTT-NNNA	ZC-A-TTT-NA

* MINIMUM SHOWN ON P&ID

Ⓢ SPECIALTY PIPECHASE OR CELL VALVE. ZSO-AAA-TTT-NNNA AND ZSC-AAA-TTT-NNNA AT VALVE BODY ONLY ON THESE SPECIALTY VALVES

① FOR SPECIALTY PIPE CHASE OR CELL VALVE ONLY.

TYPICAL PULSED NITROGEN PURGE FOR SOLID HANDLING VALVE BODY (NOTE 2)

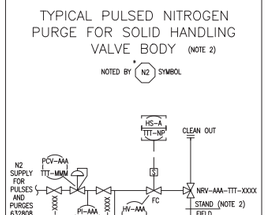

INPUTS/OUTPUTS	INSTRUMENT LIST	DCS LIST
DO SOLENOID VALVE	HV-AAA-TTT-NNNP	HS-A-TTT-NP
PRESSURE GAUGE	PI-AAA-TTT-NNNP	
PRESSURE REGULATOR	PCV-AA-TTT-NNNP	
	NRV-AAA-TTT-XXXX	

* MINIMUM SHOWN ON P&ID
NO DEVICES SHOWN ONLY SYMBOL

MMM = SAME AS ASSOCIATED STAND
TTT = TEAM MEMBER OF VALVE BEING PURGED
NNN = VALVE NUMBER OF VALVE BEING PURGED
XXXX = 3400 – 4600 (NOTE 2)
YYY = UNIQUE NUMBER

THIS MARKUP COVERS CHANGES APPROVED ON THE FOLLOWING FDCs:

FDC-11130 FDC-11667
FDC-11178
FDC-11488
FDC-11318
FDC-11589

NOTES

1. DELETED.
2. FOR FURTHER DETAILS, SUCH AS DEVICES, EXACT TAG AND PIPING SPEC. SEE THE ASSOCIATED STAND DRAWING (IN THE CABINET DRAWING SERIES ON DRAWING 632230).
3. FOR TAGGING, SEE DRAWINGS 768677 THRU 768721, 768737 THRU 768744.
4. DELETED.
5. PURGE FLUID: N INDICATES NITROGEN. IA INDICATES INSTRUMENT AIR.
6. FOR LEVEL INDICATING SERVICE. A LIT MAY BE USED IN PLACE OF A PIT.
7. THIS IS ONLY PROVIDED FOR PURGE 190–094P ON P&ID 632791.
8. IA INSIDE ◯ SYMBOL INDICATES INSTRUMENT AIR PURGE INSTEAD OF NITROGEN.
9. FOR TYPICAL POSITION FEED BACK SEE TYPICAL PNEUMATIC VALVE POSITION SWITCHES THIS SHEET.
10. ADDITIONAL LINES, VALVES AND INSTRUMENTS IN THIS STAND ARE SHOWN ON THE OTHER PARTIAL STAND DRAWING ON 632760.
11. THE QUALITY LEVEL AND ASSOCIATED QUALITY LEVEL DETERMINATION FOR EQUIPMENT, INSTRUMENTS, AND COMPONENTS ON THIS DRAWING ARE IDENTIFIED ON THE "IWTU PROJECT EQUIPMENT LIST" AS MAINTAINED UNDER MCP–3350, DATA MANAGEMENT OF CONFIGURATION MANAGED FIELDS IN THE IWTU PROJECT EQUIPMENT LIST.
12. **DENOTES VALVES HAVING POSITION SWITCHES SHOWN IN "TYPICAL PNEUMATIC VALVE POSITION SWITCHES", SEE DETAIL ON THIS DWG.** FDC-11488

PARTIAL DMR WASTE FEED INJECTOR FLUSH STAND

(STND-SRC-603E, DWG. 634103)

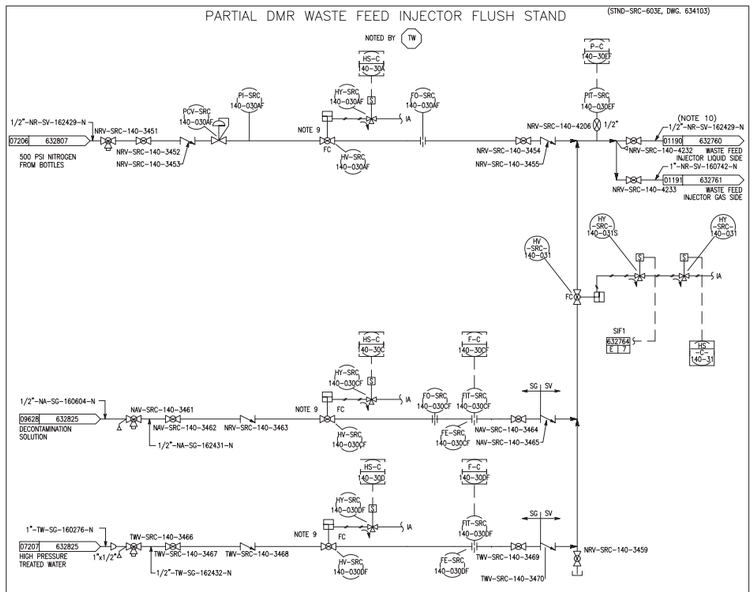

TYPICAL NITROGEN PURGE FOR INSTRUMENT

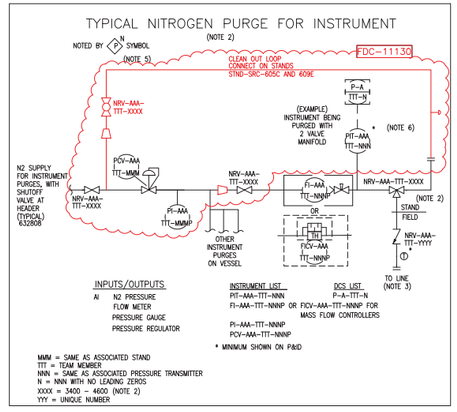

INPUTS/OUTPUTS	INSTRUMENT LIST	DCS LIST
AI N2 PRESSURE	PIT-AAA-TTT-NNN	P-A-TTT-N
FLOW METER	FI-AAA-TTT-NNNP OR FICV-AAA-TTT-NNNP FOR MASS FLOW CONTROLLERS	
PRESSURE GAUGE	PI-AAA-TTT-NNNP	
PRESSURE REGULATOR	PCV-AAA-TTT-NNNP	

* MINIMUM SHOWN ON P&ID

MMM = SAME AS ASSOCIATED STAND
TTT = TEAM MEMBER
NNN = SAME AS ASSOCIATED PRESSURE TRANSMITTER
N = NNN WITH NO LEADING ZEROS
XXXX = 3400 – 4600 (NOTE 2)
YYY = UNIQUE NUMBER

TYPICAL LINE NITROGEN PURGE W/METERING (NOTE 2)

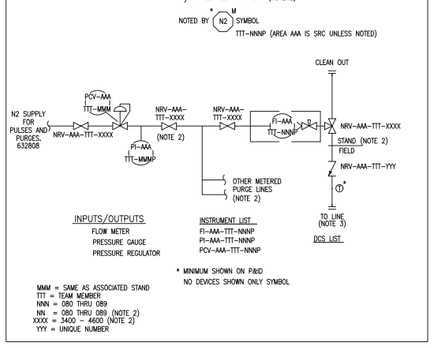

INPUTS/OUTPUTS	INSTRUMENT LIST	DCS LIST
FLOW METER	FI-AAA-TTT-NNNP	
PRESSURE GAUGE	PI-AAA-TTT-NNNP	
PRESSURE REGULATOR	PCV-AAA-TTT-NNNP	

* MINIMUM SHOWN ON P&ID
NO DEVICES SHOWN ONLY SYMBOL

MMM = SAME AS ASSOCIATED STAND
TTT = TEAM MEMBER
NNN = 080 THRU 089
NN = 080 THRU 089 (NOTE 2)
XXXX = 3400 – 4600 (NOTE 2)
YYY = UNIQUE NUMBER

TYPICAL LINE NITROGEN PURGE W/O METERING (NOTE 2)

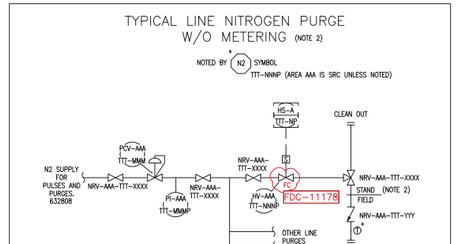

INPUTS/OUTPUTS	INSTRUMENT LIST	DCS LIST
DO SOLENOID VALVE	HV-AAA-TTT-NNNP	HS-A-TTT-NP
PRESSURE GAUGE	PI-AAA-TTT-NNNP	
PRESSURE REGULATOR	PCV-AAA-TTT-NNNP	

* MINIMUM SHOWN ON P&ID
NO DEVICES SHOWN ONLY SYMBOL

MMM = SAME AS ASSOCIATED STAND
TTT = TEAM MEMBER
NNN = 060 THRU 074
NN = 060 THRU 074
XXXX = 3400 – 4600 (NOTE 2)
YYY = UNIQUE NUMBER

TYPICAL NITROGEN METERED PURGE W/PULSE

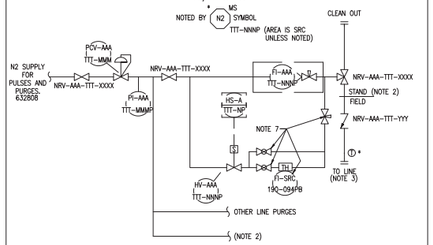

MMM = SAME AS ASSOCIATED STAND
TTT = TEAM MEMBER
NNN = 090 THRU 099
XXXX = 3400 – 4600 (NOTE 2)
YYY = UNIQUE NUMBER

INPUTS/OUTPUTS	INSTRUMENT LIST	DCS LIST
DO SOLENOID VALVE	HV-AAA-TTT-NNNP	HS-AAA-TTT-NP
PRESSURE GAUGE	PI-AAA-TTT-NNNP	
PRESSURE REGULATOR	PCV-AAA-TTT-NNNP	
FLOW METER	FI-AAA-TTT-NNNP	

TYPICAL FEED NOZZLE NITROGEN PURGE W/PULSE

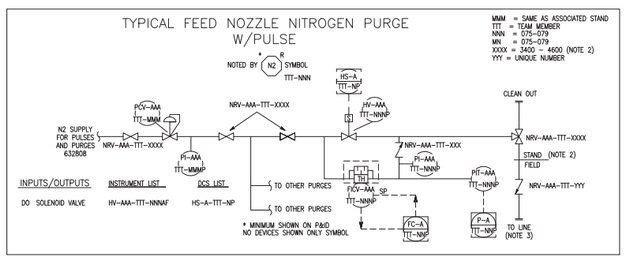

INPUTS/OUTPUTS	INSTRUMENT LIST	DCS LIST
DO SOLENOID VALVE	HV-AAA-TTT-NNNAF	HS-A-TTT-NP

* MINIMUM SHOWN ON P&ID
NO DEVICES SHOWN ONLY SYMBOL

MMM = SAME AS ASSOCIATED STAND
TTT = TEAM MEMBER
NNN = 075–079
MN = 075–079
XXXX = 3400 – 4600 (NOTE 2)
YYY = UNIQUE NUMBER

POWER ACTUATED RELIEF VALVE DETAIL

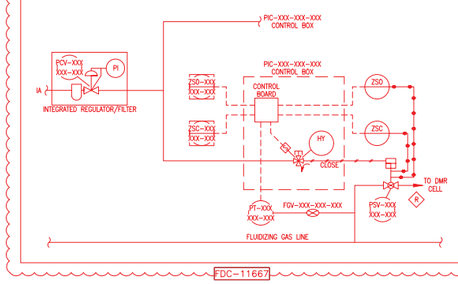

FDC-11667

INSTRUMENT AIR DISTRIBUTION FOR STAND 620C

(LOCATED ON STAND, SEE DRAWING 634120, SHT. 17)

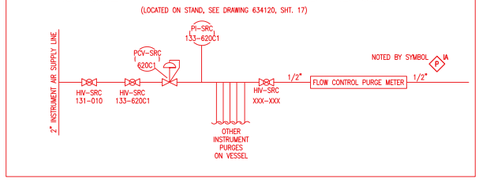

FDC-11318

REVISION HISTORY

REV	DESCRIPTION
11	AS-BUILT AS OF 09/09/2015, WORP'D FDC-10062, 10064, 10066, 11007, 11025, 11026,
	SUBMITTAL TO STATE FOR BOOK PRINT, PRIOR HISTORY REMOVED, SEE DRF-343677
12	AS-BUILT AS OF 04/04/2016, WORP'D FDC-10736, SEE DRF-348411
13	AS BUILT AS OF 02/16/2017, WORP'D FDC-11005, TITLE BLOCK UPDATED
	SEE DRF-353762

PROFESSIONAL ENGINEER REGISTERED 4307 STATE OF IDAHO RANDY EASTMAN

I CERTIFY THE CHANGES SHOWN ON THIS DRAWING REFLECT THE CURRENT CONSTRUCTED CONDITION AS OF 02/01/2017

Idaho Cleanup Project — Fluor Idaho

INTEC CPP–1696
INTEGRATED WASTE TREATMENT UNIT
PIPING & INSTRUMENT DIAGRAM

TYPICAL DETAILS

SIGNATURES/DATES APPLY TO CURRENT RELEASE ONLY	SIGN AND DATE
DESIGN: NA	– –
DRAFTER: A. KEY	
TECHNICAL CHECK: NA	– –
ENG GROUP SUPERVISOR: NA	– –
DESIGN LEAD/AUTHORITY: NA	– –
DRAFTING CHECK/ EFFECTIVE DATE: K. KELLER	

NO SCALE

DESIGN PHASE:
QUALITY LEVEL: SEE NOTE 11
HORIZONTAL SCALE: NONE
VERTICAL SCALE: NA
FOR DRAWING INDEX SEE DRAWING NO. 632756
PROJECT NUMBER: 25051

INDEX CODE NUMBER			
AREA	SYS	ETA	CHRO
200	1696	24	136

SIZE E1 DWG. 632758 REV 13 F6
DRF NO. 328567 SHEET P-9

File: 632758-13F6_RC.dgn
Path: C:\Cad Engineering\Xerox (28) DGN Documents\Active Files\632758\632758-13F6_RC.dgn
Date: 02/09/18 9:04 AM Layout Name: E1632758
ID: ROBISM

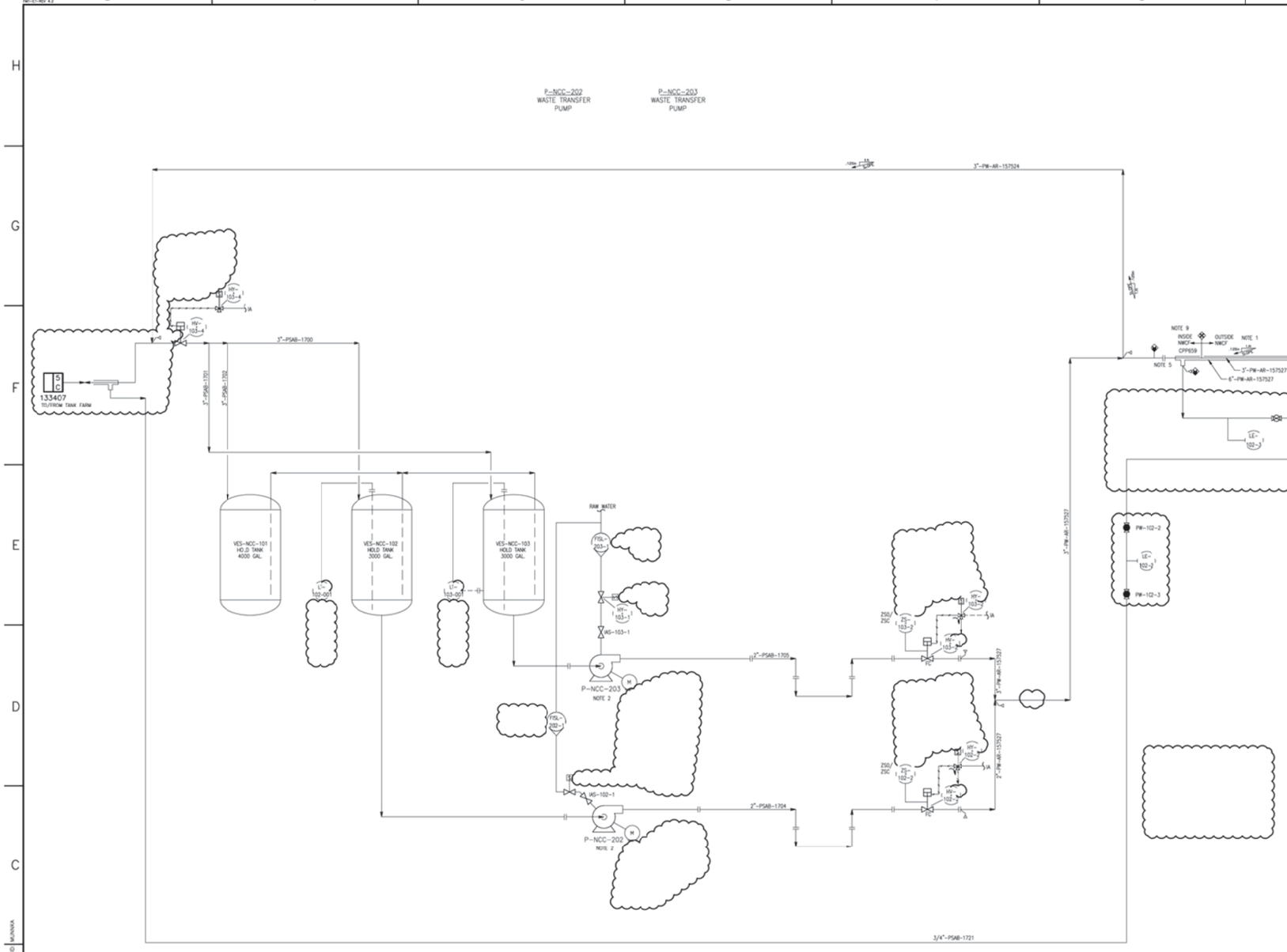

NOTES

1. WASTE FEED LINE IS SLOPED TOWARD NMCF FACILITY TO RETURN/COLLECT ANY SBW LIQUIDS LEAKING FROM INNER PIPE OF DOUBLE PIPE SYSTEM. LEAK DETECTION PROVIDED.
2. TRANSFER OF SBW FROM NMCF TO INTU WASTE FEED TANK (WFT) WILL BE PERFORMED MANUALLY.
3. REFERENCE NMCF P&ID No. 133410, 133411, 133412 AND 635083 FOR INSTRUMENT DETAILS.
4. REMOVED.
5. SPECTACLE BLIND FOR ISOLATION DURING CONSTRUCTION.
6. REMOVED.
7. SAMPLE AND ANALYSIS OF SBW FEED SHALL BE CONDUCTED PRIOR TO TRANSFER OF SBW TO INTU AND MAY INCLUDE CHARACTERIZATION OF RADIONUCLIDES AND CHEMICAL CONSTITUENTS.
8. REMOVED.
9. ALL DEVICES & LOGIC INSIDE NMCF IS NOT IN THE WGI INTU SCOPE. THIS IS A REFERENCE DRAWING FOR MASTER DRAWING SEE 635083, 133410, 133411, 133412.

REFERENCE DRAWINGS.

635038 INTEC/INTU MODIFICATION TO NMCF VALVE CUBICLE
133410 NMCF MECHANICAL P&ID BLEND & HOLD CELL & VALVE CUBICLE
133411 NMCF MECHANICAL FLOW DIAGRAM BLEND & HOLD CELL & VALVE CUBICLE
133412 NMCF MECHANICAL FLOW DIAGRAM BLEND & HOLD CELL & VALVE CUBICLE

REV	DESCRIPTION
7	AS BUILT AS OF 1/12/2012, SEE
	DIF-133398, INCORPORATED FOC 8118
	AND 8215, REVISE CL CODE AND
	TITLE, PRIOR HISTORY REMOVED

REVISION HISTORY

NO SCALE

DESIGN PHASE:	
QUALITY LEVEL:	3
HORIZONTAL SCALE	NONE
VERTICAL SCALE	NA

FOR DRAWING INDEX SEE DRAWING NO. 632756

SIGNATURE/DATES APPLY TO CURRENT REVISION ONLY

	SIGN AND DATE
DESIGN: NA	
DRAFTER: K. MUNNS	
TECHNICAL CHECK: NA	
ENG GROUP SUPERVISOR: NA	
DESIGN LEAD: NA	
DRAFTING CHECK (EFFECTIVE SHEET): C. MACE	

Idaho Cleanup Project

INTEC CPP-1696
INTEGRATED WASTE TREATMENT UNIT
PIPING FLOWSHEET
SBW WASTE TRANSFER

PROJECT NUMBER: 25051

SYSTEM	FACILITY	AREA	DRAWING NUMBER	REV
200	1696	52	1136	

DWG NO. 632759 REV 7

SHEET P-10

© MUNNS

File: 632759-7.dwg
Date: 01/14/13 5:36 PM
Path: N:\...\drawings\INTU Electrical and Mechanical Drawings\DIF-133398 DIF-632759-7
Layout: Layout1

SV-SRB-939-A ROTARY DOME VALVE | SV-SRB-939-B ROTARY DOME VALVE | HST-SRB-931 BULK BAG HOIST | VES-SRB-137 COAL STORAGE SILO | VES-SRB-138 COAL STORAGE SILO | SPL-SRB-937-A/-B COAL BIN ACTIVATOR | CVR-SRB-837 COAL CONVEYOR | SPL-SRB-947-A/-B BULK BAG ACCESS PORT | MOT-SRB-917-201 BULK BAG ACTIVATOR | MOT-SRB-938-201 BULK BAG ACTIVATOR | MOT-SRB-937-202 ROTARY FEEDER | MOT-SRB-938-202 ROTARY FEEDER | CRNY-SRB-138 BULK BAG SPREADER BEAM

NOTES

1. SEE DRAWING 632756 AND 632757 FOR SYMBOLS.
2. 8" PIPE TOR BULK BAG CONNECTION.
3. DELETED.
4. DELETED.
5. DELETED.
6. CHANGED INSTRUMENT AND VALVE TAG NUMBERS PER MCP-3785 AND EQUIPMENT TAG NUMBERS PER DCN-INTU-115.
7. DELETED
8. DELETED.
9. VENDOR SUPPLIED EXCEPT DCS CONNECTIONS. APPLIES TO ENTIRE SHEET.
10. 1/4" TUBING NITROGEN LINE TO 6" ROTARY DOME VALVE INFLATABLE SEAL, (TYPICAL 2 PLACES). REQUIRED SEQUENCE TO OPERATE VALVE:
    - 10.1 CONFIRM EQUAL PRESSURE ON BOTH SIDES OF VALVE.
    - 10.2 DE-ENERGIZE SEAL SOLENOID TO DEFLATE VALVE SEAL.
    - 10.3 AFTER 3-SECOND DELAY, ENERGIZE VALVE ACTUATOR SOLENOID TO OPEN VALVE.
    - 10.4 AFTER REQUIRED VALVE OPEN TIME, DE-ENERGIZE VALVE ACTUATOR SOLENOID TO CLOSE VALVE.
    - 10.5 AFTER 3-SECOND DELAY, CONFIRMATION BY VALVE CLOSED PROXIMITY SWITCH AND AFTER AN ADDITIONAL 1-SECOND DELAY, ENERGIZE SEAL SOLENOID TO INFLATE VALVE SEAL.
    - 10.6 END OF VALVE CYCLE.
    - 10.7 REPEAT SEQUENCE FOR EACH COMPLETE VALVE CYCLE.
    - 10.8 NOTICE: ALL TIME DELAYS LISTED ABOVE TO BE CONFIRMED AT VALVE COMMISSIONING.
11. THE QUALITY LEVEL AND ASSOCIATED QUALITY LEVEL DETERMINATION FOR EQUIPMENT, INSTRUMENTS, AND COMPONENTS ON THIS DRAWING ARE IDENTIFIED ON THE "IWTU PROJECT EQUIPMENT LIST" AS MAINTAINED UNDER MCP-3350, DATA MANAGEMENT OF CONFIGURATION MANAGED FIELDS IN THE IWTU PROJECT EQUIPMENT LIST.
12. ON LOSS OF POWER, VALVE FAILS CLOSED AND INFLATABLE SEAL DEFLATES, ON LOSS OF AIR, VALVE FAILS LAST, ON LOSS OF NITROGEN, INFLATABLE SEAL DEFLATES.

VENDOR SUPPLIED

TROLLEY MOTOR 1/4 HP — HS-SRB 931-001A — HS-SRB 931-001B — HST-SRB-931 — MONORAIL — 09001 632780

LIFT MOTOR 2 1/2 HP — UP-DN HS-SRB 931-001 — HS ON-OFF — HS LOCAL REMOTE — ON FLOOR

WIRING FROM CONTROL PANEL CP-SRB-601 — WIRING TO JUNCTION BOX JB-SRB-017

VTA — 3"-VN-ST-161917-N — 2"-NR-SG-160282-N — 2"-NR-SG-160304-N — 632780 03101 COAL SILO

CRNY-SRB-137 — COAL BULK BAG — SPL-SRB-947-A — NRV-SRB-137-014 — FO-SRB 137-014

NE 1"-NR-SG-161396-N — NRV-SRB-138-002 — NRV-SRB-137-604 — PI-SRB 137-003

M-B 937-201 — M-SRB 937-201 — I-B 937-201 — I-SRB 937-201 — HS-B 937-201 — MOT-SRB-937-201

ATM -15"W.C. 2.5 PSIG — PSV-SRB 137-009 — NOTE 2 — 3"-VN-ST-161915-N

GRID D5 — 1"-NR-SG-160285 — 1"-NR-SG-161345-N — 1"-NR-SG-160283-N — 1"-NR-SG-160281-N — 1/2"-NR-SE-162831-N — 1/2"-NR-SE-162829-N

VES-SRB-137 — PIT-SRB 137-008 — ATV-SRB 137-008 — 2" N14 — NRV-SRB-137-018 — (5) 4" N8, N9, N10, N11, N12 — 2" N13

ZSC-SRB 137-013 — ZSO-SRB 137-010 — HV-SRB 137-010 — IAS — NRV-SRB-137-428 — FC — FO-SRB 137-016

TI-SRB 137-007 — TT-SRB 137-007 — TE-SRB 137-007 — 1" N-19

1-1/2" N17 — LSL-SRB 137-005 — LSLL-SRB 137-006 — 1" N4 — 1-1/2" N18

(2) 1" N15, N16 ROD-OUT PORTS AT 90° — 24" N5 — SPL-SRB-937-A — SV-SRB-939-A — SEE NOTE 10, 12

HV-SRB 939-008A — PSC-SRB 939-008A — ZSC-SRB 939-008A — ZSO-SRB 939-008A — FC-SRB 939-8A — PSC-SRB 939-008A — M-SRB 937-202 — I-SRB 937-202 — 6"-AT-SW-160284-N

CONVEYOR 180° TURNAROUND — MOT-SRB-937-202 — CVR-SRB-837 — 03003 632782 DMR BIN

HV-SRB 939-009A — 1" x 1/2" — NRV-SRB-837-004 — 1"-NR-SG-161399-N — PI-SRB 837-001 — PCV-SRB 939-009A — NRV-SRB-939-0090 — 1.5 PSIG — PCV-SRB 137-001 — 1" x 1/4" — 1"-NR-SE-161976-N — NC 1"-NR-SG-160558-N — NRV-SRB-137-063 — NRV-SRB-137-008

NRV-SRB-137-001 — 1/2"-NR-SE-162830-N — 1"-NR-SG-160281-N — 1/2"-NR-SE-162829-N — PI-SRB 137-020 — NRV-SRB-137-605 — 632780 09005 — NRV-SRB-137-467 — 07313 632808 NITROGEN

1"-NR-SG-160335-N — 09003 632781

CRNY-SRB-138 — COAL BULK BAG — SPL-SRB-947-B — NRV-SRB-138-015 — FO-SRB 138-015

M-B 938-201 — M-SRB 938-201 — I-B 938-201 — I-SRB 938-201 — HS-B 938-201 — MOT-SRB-938-201

ATM -15"W.C. 2.5 PSIG — PSV-SRB 138-009 — NOTE 2 — 3"-VN-ST-161915-N — 3"-VN-ST-161917-N — 632780 03102 REFORMER ADDITIVES SHEET 2

GRID E7 — 1"-NR-SG-160285-N

VES-SRB-138 — PIT-SRB 138-008 — ATV-SRB 138-008 — 2" N14 — NRV-SRB-138-018 — (5) 4" N8, N9, N10, N11, N12 — 2" N13

ZSC-SRB 138-011 — ZSO-SRB 138-010 — HV-SRB 138-011 — IAS — NRV-SRB-138-429 — FC

TI-SRB 138-007 — TT-SRB 138-007 — TE-SRB 138-007 — 1" N-19

1-1/2" N17 — LSL-SRB 138-005 — LSLL-SRB 138-006 — 1" N4 — 1-1/2" N18

(2) 1" N15, N16 ROD-OUT PORTS AT 90° — 24" N5 — SPL-SRB-937-B — SV-SRB-939-B — SEE NOTE 10, 12

HV-SRB 939-008B — PSC-SRB 939-008B — ZSC-SRB 939-008B — ZSO-SRB 939-008B — FC-SRB 939-8B — PSC-SRB 939-008B — M-SRB 938-202 — I-SRB 938-202 — 6"-AT-SW-160286-N

HV-SRB 939-009B — PCV-SRB 939-009B — NRV-SRB-939-0090 — 1" x 1/4" — 1"-NR-SE-161977-N — 1"-NR-SG-160028"-N — 03001 632780 CARBON SLO

NRV-SRB-145-016

REV	DESCRIPTION
13	AE BUILT AS OF 10/21/2015.
	INSERT: IDC 8532, RFI 6, 8733
	SEE DWG 580284
12	AS-BUILT AS OF 03/07/2012.
	INSERT: FDL 8851, 9869
	HISTORY REMOVED, SEE DWG 130383

REVISION HISTORY

NO SCALE

DESIGN PHASE:	
QUALITY LEVEL:	SEE NOTE 11
HORIZONTAL SCALE:	NONE
VERTICAL SCALE:	NA

FOR DRAWING INDEX SEE DRAWING NO. 632756

DESIGNED (OR CAD) APPD. BY: CURRENT RELEASE ONLY	SIGN AND DATE
ENGR:	
CHK:	
2 MONTHS	
TECHNICAL CHECK:	
QA:	
DESIGN LEAD:	
PM:	
DRAFTING (CAD) SYSTEMS: R. KELLEY	

Idaho Cleanup Project

INTEC CPP-1696
INTEGRATED WASTE TREATMENT UNIT
PIPING & INSTRUMENT DIAGRAM
REFORMER ADDITIVES
SHEET 1

PROJECT NUMBER 25051

SYS	AREA	SEQUENCE NUMBER	SUFFIX
200	1696	P4	30

E DWG 632779 REV 13

SHEET P-30

PWT-C1-REV 2014-01-29

SV-SRB-939-C	ROTARY DOME VALVE
SPL-SRB-947-C	BULK BAG ACCESS PORT
VES-SRB-139	CARBON STORAGE SILO
SPL-SRB-939	CARBON BIN ACTIVATOR
CVR-SRB-839	CARBON CONVEYOR
MOT-SRB-939-201	BULK BAG ACTIVATOR
MOT-SRB-939-202	ROTARY FEEDER

NOTES

1. SEE DRAWING 632756 AND 632757 FOR SYMBOLS.
2. 8" PIPE FOR BULK BAG CONNECTION.
3. DELETED.
4. DELETED.
5. DELETED.
6. CHANGED INSTRUMENT AND VALVE TAG NUMBERS PER MCP-3785 AND EQUIPMENT TAG NUMBERS PER DCN-IWTU-115.
7. DELETED.
8. DELETED.
9. VENDOR SUPPLIED EXCEPT DCS CONNECTIONS. APPLIES TO ENTIRE SHEET.
10. 1/4" TUBING NITROGEN LINE TO 6" ROTARY DOME VALVE INFLATABLE SEAL, (TYPICAL 2 PLACES). REQUIRED SEQUENCE TO OPERATE VALVE:
    - 10.1 CONFIRM EQUAL PRESSURE ON BOTH SIDES OF VALVE.
    - 10.2 DE-ENERGIZE SEAL SOLENOID TO DEFLATE VALVE SEAL.
    - 10.3 AFTER 3-SECOND DELAY, ENERGIZE VALVE ACTUATOR SOLENOID TO OPEN VALVE.
    - 10.4 AFTER REQUIRED VALVE OPEN TIME, DE-ENERGIZE VALVE ACTUATOR SOLENOID TO CLOSE VALVE.
    - 10.5 AFTER 3-SECOND DELAY, CONFIRMATION BY VALVE CLOSED PROXIMITY SWITCH AND AFTER AN ADDITIONAL 1-SECOND DELAY, ENERGIZE SEAL SOLENOID TO INFLATE VALVE SEAL.
    - 10.6 END OF VALVE CYCLE.
    - 10.7 REPEAT SEQUENCE FOR EACH COMPLETE VALVE CYCLE.
    - 10.8 NOTICE: ALL TIME DELAYS LISTED ABOVE TO BE CONFIRMED AT VALVE COMMISSIONING.
11. THE QUALITY LEVEL AND ASSOCIATED QUALITY LEVEL DETERMINATION FOR EQUIPMENT, INSTRUMENTS, AND COMPONENTS ON THIS DRAWING ARE IDENTIFIED ON THE "IWTU PROJECT EQUIPMENT LIST" AS MAINTAINED UNDER MCP-3350, DATA MANAGEMENT OF CONFIGURATION MANAGED FIELDS IN THE IWTU PROJECT EQUIPMENT LIST.
12. ON LOSS OF POWER, VALVE FAILS CLOSED AND INFLATABLE SEAL DEFLATES. ON LOSS OF AIR, VALVE FAILS LAST. ON LOSS OF NITROGEN, INFLATABLE SEAL DEFLATES.

VENDOR SUPPLIED

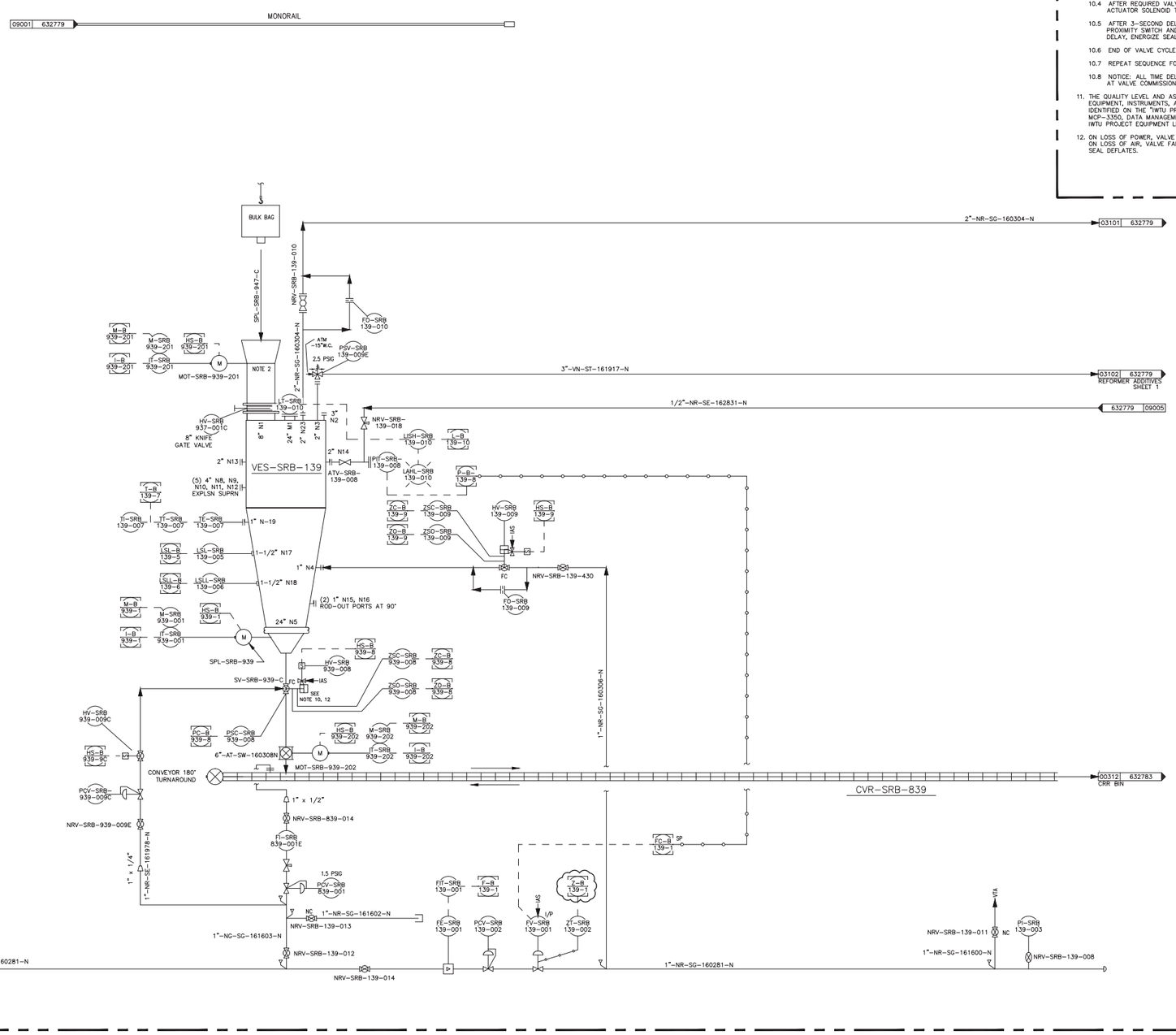

REV	DESCRIPTION
14	AS-BUILT AS OF 05/27/2015
	INCORP'D FDC 9951, PRIOR
	HISTORY REMOVED, SEE DRF-345584

REVISION HISTORY

NO SCALE

DESIGN PHASE:	
QUALITY LEVEL:	SEE NOTE 11
HORIZONTAL SCALE	NONE
VERTICAL SCALE	NA
FOR DRAWING INDEX SEE DRAWING NO.	632756
SIGNATURES/DATES APPLY TO CURRENT RELEASE ONLY	SIGN AND DATE
DESIGN: NA	– –
DRAWER: J. MONCUR	Jon Moncur CWI 2015.06.04 10:19:43 -06'00'
TECHNICAL CHECK: NA	– –
ENG GROUP SUPERVISOR: NA	– –
DESIGN LEAD/AUTHORITY: NA	– –
DRAFTING CHECK/ EFFECTIVE DATE: K. KELLER	Kris Keller CWI 2015.06.04 10:25:33 -06'00'

Idaho Cleanup Project

INTEC CPP-1696
INTEGRATED WASTE TREATMENT UNIT
PIPING & INSTRUMENT DIAGRAM
REFORMER ADDITIVES SHEET 2

PROJECT NUMBER:	25051
INEEL CODE NUMBER:	AREA 200 | DRF 1696 | FL 24 | DRG# 135
SIZE	E
DWG-	632780
REV	14
DRF NO.	---
SHEET	P-31

File: 632780-14.dwg
Paths: K:\IWTU\As-Builts\DRF-345584
Date: 06/04/15 10:12 AM Layout Name: Layout1
ID: MKJ

SLD-SRC-985
TRANSFER BELL SHIELD HOUSING
NOTE 11

CRT-SRC-990/991
CANISTER FILL STATION QNTY 0/1
NOTE 11

CRN-SRC-985
TRANSFER BELL CRANE
NOTE 11

WIN-SRC-690-A
CANISTER CELL SHIELD WINDOW UPPER 0

WIN-SRC-690-B
CANISTER CELL SHIELD WINDOW LOWER 0

WIN-SRC-691-A
CANISTER CELL SHIELD WINDOW UPPER 1

WIN-SRC-691-B
CANISTER CELL SHIELD WINDOW LOWER 1

SPL-SRC-980/981
PINTLE PLUG REMOVAL SYSTEM 0/1
NOTE 11

COV-SRC-990/991
SLIDING CLOSURE CELL TOP 0/1

ALOK-SRC-690/691
DOUBLE DOOR CELL PASS THROUGH 0/1

MAN-SRC-990-A
CANISTER FILL UPPER SWIPE MANIPULATOR 0

MAN-SRC-991-A
CANISTER FILL UPPER SWIPE MANIPULATOR 1

MAN-SRC-990-B
CANISTER FILL LOWER SWIPE MANIPULATOR 0

MAN-SRC-991-B
CANISTER FILL LOWER SWIPE MANIPULATOR 1

CAN-SRC-101
CANISTER FILL SYSTEM WASHDOWN SPECIAL CANISTER

GEN-SRC-690
NITROGEN GENERATOR PARKER BALSTON HFX-1

F-SRC-676, 690-A/-B, 691-A/-B
NITROGEN PURGE GAS DRYER
5 MICRON FILTER

WIN-SRC-676, 690-C/-D, 691-C/-D
SHIELD WINDOW OIL RESERVOIR

LD-SRC-991/990
CANISTER CONVEYOR AND LIFT 1/0
NOTE 11

VIB-SRC-991-A/-B
CANISTER VIBRATOR 1
NOTE 11

VIB-SRC-990-A/-B
CANISTER VIBRATOR 0
NOTE 11

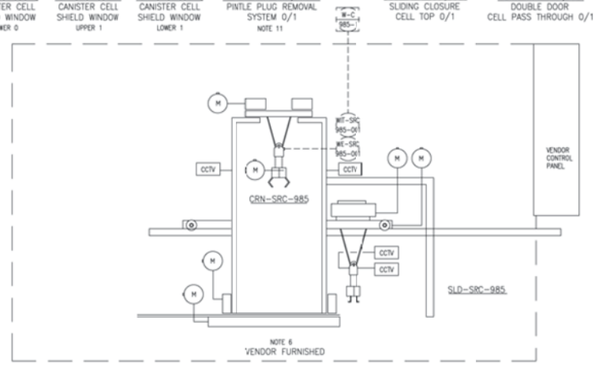

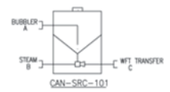

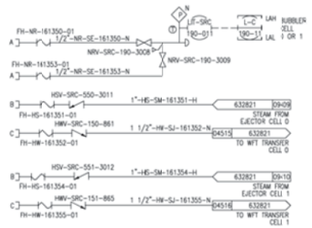

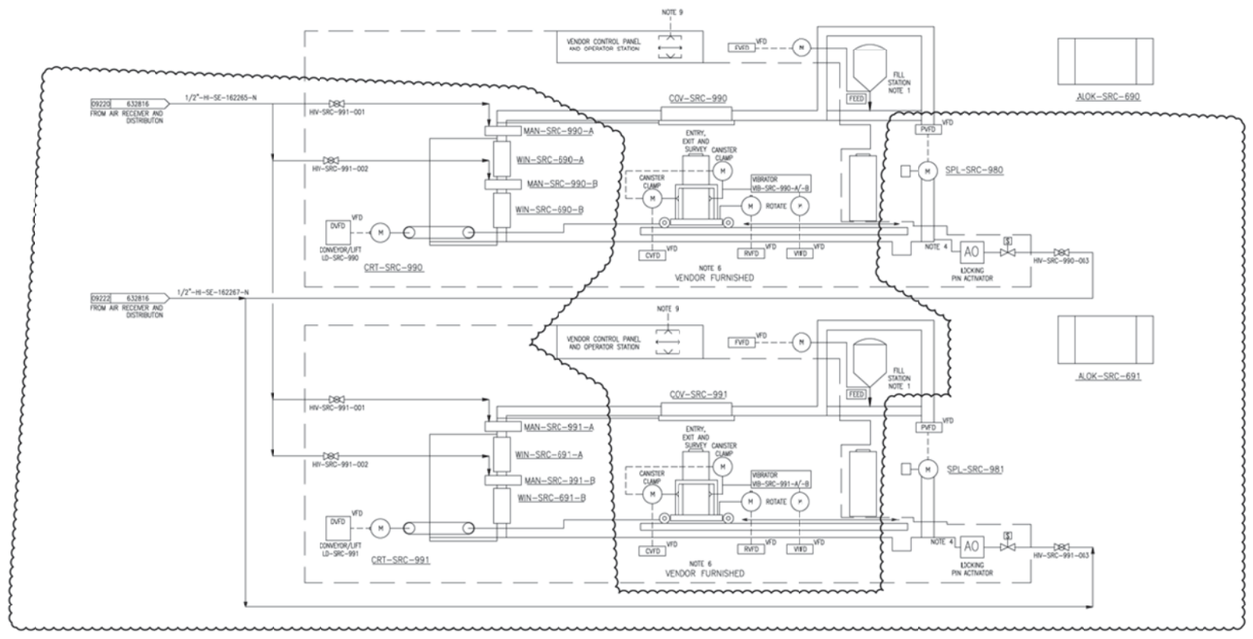

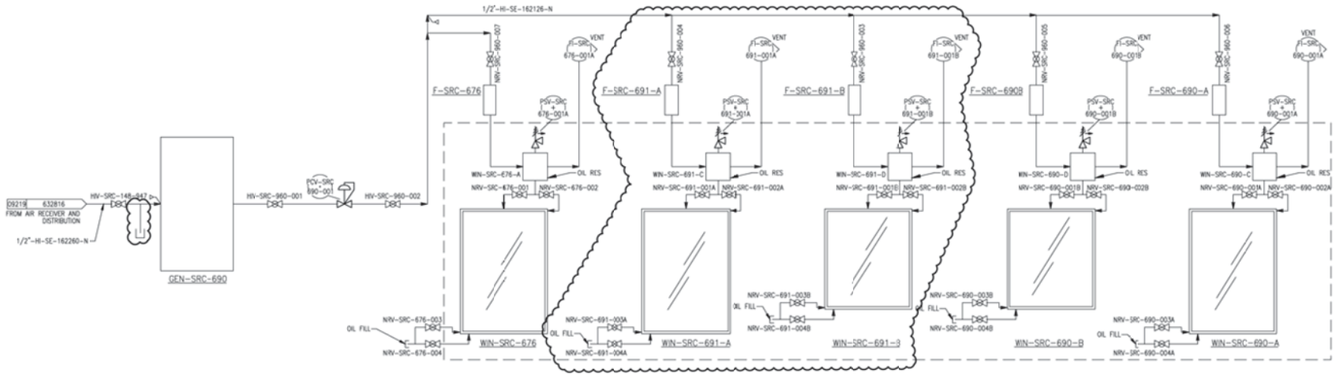

NOTES

1. P&ID'S FOR FILL STATIONS ARE SHOWN ON 632787, 632788, 632789.
2. DELETED.
3. DELETED.
4. FOR CANISTER FILLING AREA SUMPS, SEE P&ID 632821.
5. DELETED.
6. FINAL VENDOR P&ID TAGS AND DCS INTERFACES ARE TBD AFTER VENDOR IS SELECTED.
7. SAMPLE AND ANALYSIS OF CANISTER EXTERIOR SWIPE TO BE CONDUCTED PRIOR TO TRANSFER TO VAULT STORAGE.
8. CHANGED INSTRUMENT AND VALVE TAG NUMBERS PER MCP-3785 AND EQUIPMENT TAG NUMBERS PER DON-NTU-115.
9. SEE DRAWINGS 632787 AND 632788 FOR DCS INTERFACE.
10. PROCESS SKID PACKAGE BOUNDARIES REMOVED.
11. VENDOR SUPPLIED: PIPING AND INSTRUMENTATION SUPPORTING VENDOR SUPPLIED EQUIPMENT IS TBD.
12. THE QUALITY LEVEL AND ASSOCIATED QUALITY LEVEL DETERMINATION FOR EQUIPMENT, INSTRUMENTS, AND COMPONENTS ON THIS DRAWING ARE IDENTIFIED ON THE "NTU PROJECT EQUIPMENT LIST" AS MAINTAINED UNDER MCP-3350, DATA MANAGEMENT OF CONFIGURATION MANAGED FILE.ZIS IN THE NTU PROJECT EQUIPMENT LIST.

REV	DESCRIPTION
9	AS BUILT AS OF 12/22/2011, SEE
	DIF-33328A, INCORPORATED FDC 7853
8	AS BUILT AS OF 9/15/2011
	INCORPORATED FCN 31490R2, 3853
	3854, SEE DIF-334376
	PRIOR HISTORY REMOVED

REVISION HISTORY

NO SCALE

DESIGN PHASE:	
QUALITY LEVEL:	SEE NOTE 12
HORIZONTAL SCALE	NONE
VERTICAL SCALE	NA
FOR DRAWING INDEX SEE DRAWING NO.	632756
SIGNATURES/DATES APPLY TO CURRENT RELEASE ONLY	TRUE AND SAFE
DESIGN: NA	
DRAFTER: K. MUNNS	
TECHNICAL CHECK: NA	
ENG GROUP SUPERVISOR: NA	
DESIGN LEAD: NA	
DRAFTING FIELD/ DETECTING SMTS: G. MACE	

Idaho Cleanup Project
INTEC CPP-1696
INTEGRATED WASTE TREATMENT UNIT
PIPING & INSTRUMENT DIAGRAM
CANISTER HANDLING

PROJECT NUMBER: 25051

DRAWING TYPE	SYSTEM	SEQUENCE	SUFFIX
M2D	1696	24126	

E1 DWG: 632792 REV: 9

DIF NO. — SHEET: 9-43

© MUNNAA

Plot: 01/09/12 3:34 PM Lionel Newingham
Path: \\ATLAS\work\Engineering\NTU Example and Master Library\Drawings\632792_814
File: 632792-0.dgn

THIS MARKUP COVERS CHANGES APPROVED ON THE FOLLOWING FDCs:
FDC-10928
FDC-11012

WIN-SRC-676 SAMPLE CELL SHIELD WINDOW

ALOK-SRC-672 SAMPLE CELL DOUBLE DOOR

VES-SRC-173 SAMPLE COLLECTION CHAMBER FDC-10928

VES-SRC-172 SAMPLE COLLECTION VESSEL

SCL-SRC-671 SAMPLE WEIGH SCALE NOTE 13

SAM-SRC-671 PARTICLE SIZE CLASSIFIER

JET-SRC-587 SAMPLE MOTIVE EDUCTOR

MAN-SRC-963-A SAMPLE CELL MANIPULATOR A

MAN-SRC-963-B SAMPLE CELL MANIPULATOR B

SAMPLE COLLECTION CONTROL PANEL AND OPERATOR STATION CP-SRC-624A

NOTES:

1. DENOTES VALVES HAVING POSITION SWITCHES SHOWN IN "TYPICAL POSITION SWITCH" SKETCH. SEE DWG. 632758. USE AN "A" SUFFIX FOR SAMPLE VALVE DCS POSITION SWITCHES.
2. (N2) SEE DETAIL ON DWG. 632758 AND LS-19-004.
3. (P) SEE DETAIL ON DWG. 632758 AND LS-19-004.
4. DELETED
5. DELETED
6. DELETED
7. VALVES/READOUTS CONTROLLED/VIEWED ON LOCAL PANEL AT WINDOW.
8. DELETED
9. DELETED
10. DELETED
11. DELETED
12. DELETED
13. DELETED
14. VALVE IS MANIPULATOR OPERATED. LOCATE VALVE NEAR VESSEL.
15. DELETED.
16. TEMPORARY CONNECTION TO 1/2"-NA-SG-160318-N IS MADE BY FLEXIBLE HOSE FROM NA-SG-160603 (P&ID 632822).
17. THE QUALITY LEVEL AND ASSOCIATED QUALITY LEVEL DETERMINATION FOR EQUIPMENT, INSTRUMENTS, AND COMPONENTS ON THIS DRAWING ARE IDENTIFIED ON THE "IWTU PROJECT EQUIPMENT LIST" AS MAINTAINED UNDER MCC-1350, DATA MANAGEMENT OF CONFIGURATION MANAGED FIELDS IN THE IWTU PROJECT EQUIPMENT LIST.
18. THE ACTUATOR FOR HV-SRC-191-022 HAS BEEN EQUIPPED WITH A CORROSION RESISTANT ENCLOSURE.

REV	DESCRIPTION
11	AS-BUILT AS OF 03/31/2016
	INCORP'D FDC-10755
	SEE DRF-345370
10	AS-BUILT AS OF 4/22/2015, INCORP'D
	FDC-10141, 10310, 10427, PRIOR
	HISTORY REMOVED, SEE DRF-345818

REVISION HISTORY

I CERTIFY THE CHANGES SHOWN ON THIS DRAWING REFLECT THE CURRENT CONSTRUCTED CONDITION AS OF 03/31/2016

PROFESSIONAL ENGINEER REGISTERED 4307 STATE OF IDAHO BRENT EASTMAN

NO SCALE

DESIGN PHASE:	
QUALITY LEVEL:	SEE NOTE 17
HORIZONTAL SCALE	NONE
VERTICAL SCALE	NA
FOR DRAWING INDEX SEE DRAWING NO.	632756
SIGNATURES/DATES APPLY TO CURRENT RELEASE ONLY	SIGN AND DATE
DESIGN: NA	– –
DRAFTER: A. KEY	
TECHNICAL CHECK: NA	– –
ENG GROUP SUPERVISOR: NA	– –
DESIGN LEAD/AUTHORITY: NA	– –
DRAWING CHECK/ EFFECTIVE DATE: K. KELLER	

Idaho Cleanup Project

INTEC CPP-1696
INTEGRATED WASTE TREATMENT UNIT
PIPING & INSTRUMENT DIAGRAM
SAMPLE TRANSFER

PROJECT NUMBER: 25051

BECHTEL CODE NUMBER			
AREA	TYPE	CL	CONT
200	1696	24	136

SIZE E DWG- 632793 REV 11 F2

DRF NO. --- SHEET P-44

File: 632793-11F1.dwg
Path: K:\IWTU\As-Builts\Essential VDDs
Date: 09/21/16 – 3:12 PM Layout Name: Sht 1
ID: KEY4L

WIN-SRC-676
SAMPLE CELL
SHIELD WINDOW

ALOK-SRC-672
SAMPLE CELL
DOUBLE DOOR

VES-SRC-173
SAMPLE COLLECTION
CHAMBER

VES-SRC-172
SAMPLE
COLLECTION VESSEL

SCL-SRC-671
SAMPLE WEIGH
SCALE
NOTE 13

SAM-SRC-671
PARTICLE SIZE
CLASSIFIER

JET-SRC-587
SAMPLE MOTIVE
EDUCTOR

MAN-SRC-963-A
SAMPLE CELL
MANIPULATOR A

MAN-SRC-963-B
SAMPLE CELL
MANIPULATOR B

SAMPLE COLLECTION CONTROL PANEL
AND OPERATOR STATION
CP-SRC-624A

NOTE 16 1/2"-NA-SG-160318-N 1"X1/2" NAV-SRC-172-3013

PI-SRC 587-008 1"-NR-SG-160319-N 3/4" NRV-SRC-587-843 07319 632808 NITROGEN NRV-SRC-157-857 1"X1 1/2" NRV-SRC-172-452 PI-SRC 587-002 1 1/2"X1/2" NRV-SRC-172-454 NRV-SRC-172-453 PI-SRC 587-009 NRV-SRC-172-805 NRV-SRC-172-455 1/2"-NR-SG-160319-N

1/2"-NR-SG-161910-N NRV-SRC-190-626 NOTE 7 NRV-SRC-190-787 PI-SRC 190-015 NRV-SRC-190-624 NRV-SRC-190-824 NRV-SRC-190-920 FDC-11126

1/2"-NR-SG-161911-N NRV-SRC-191-637 NRV-SRC-191-680 NOTE 7 NRV-SRC-191-636 NRV-SRC-191-635 NRV-SRC-192-921 PI-SRC 191-027 FDC-11126

1/2"-NR-SC-161584-N HS-SRC 191-022 ZSC-SRC 191-022 ZSO-C 191-22 ZSO-SRC 191-022 HS-C 191-22 ZSC-SRC 191-022 ZSO-SRC 191-022 HY-SRC 191-022 SEE NOTE 18 NOTE 7 IA

04303 632787 FROM SOLIDS TRANSPORT LINE (PB-160062) FC HV-SRC 191-022 FDC-11126 NOTE 2 N2 191-092P 1/2"-NR-SE-162621

STR-SRC-191-001 1"x2" 2"x1" 1"x3/4" 1"-PB-SC-160218-N PI-SRC 191-099P NOTE 20 N2 191-099P NOTE 20 N2 191-096P PI-SRC 191-096P HV-SRC 191-026 FDC-11126

PI-SRC 191-094P PI-SRC 191-3938 NRV-SRC-191-3937 NRV-SRC-191-3936 NRV-SRC-191-3932 HV-SRC 191-094P HS-C 191-94P HS-SRC 191-94P STND-SRC-619C

HS-C 191-93P HV-SRC 191-093P HS-SRC 191-93P STND-SRC-619C WIN-SRC-676 ALOK-SRC-672

HS-SRC 191-026 ZSC-SRC 191-026 ZSO-SRC 191-026 NOTES 1 & 7 NOTE 7 IA

NOTE 14 NAV-SRC-172-3014 N3 NOTE 7 NG FDC-11126 PI-SRC 172-014 NOTE 20 N2 172-061P

ZO-SRC 172-001 G ZC-SRC 172-001 R HS-SRC 172-001 IA ZSO-SRC 172-001 ZSC-SRC 172-001 NOTE 7 HV-SRC 172-001 FC NOTES 1 & 7

ZO-SRC 172-015 G ZC-SRC 172-015 R HS-SRC 172-015 IA ZSO-SRC 172-015 ZSC-SRC 172-015 NOTE 7 HV-SRC 172-015 FC NOTES 1 & 7

FE-SRC 173-001 NOTE 7 FY-SRC 173-001 N1 N4 VES-SRC-172 SEE NOTE 19 N5

NRV-SRC-173-001 NRV-SRC-173-002 PBV-SRC-173-002 NOTE 14 PI-SRC 173-001 F-SRC 173-001 FI-SRC 173-002 LT-SRC NOTE 7 173-001 LI-SRC 173-001 IA PIC NOTE 7 30 PSI PCV-SRC-173-001 VES-SRC-173 HS-SRC 173-001 HV-SRC 173-001 PBV-SRC-173-003 NOTE 14 PBV-SRC-173-004 NOTE 14 1"-PB-SC-160714-N

1"-PB-SC-160723-N 1"-PB-SC-161079 1"X1/2" MINIMUM DISTANCE HS-C 587-1 O/C HS-SRC 587-001 HY-SRC 587-001 IA ZO-C 587-1 ZC-C 587-1 ZO-SRC 587-001 G ZC-SRC 587-001 R ZSO-SRC 587-001 ZSC-SRC 587-001 FDC-11126 NOTE 20 N2 587-060P 1 1/2"-PB-SB-161070-N 10103 632790 TO PRODUCT RECEIVER FILTER

HS-SRC 172-008 NOTES 1 & 7 HV-SRC 172-008 FC ZO-SRC 172-008 G ZC-SRC 172-008 R ZSO-SRC 172-008 ZSC-SRC 172-008 JET-SRC-587 1"X1/2" PBV-SRC-587-001 1 1/2"-PB-SB-161070-N FC NOTES 1 & 7 HV-SRC 587-001 NOTE 20 N2 587-061P PI-SRC 587-061P FDC-11126 SC SB

1"-PB-SC-160560-N FH-PB-160560-01 SUCTION HOSE 3/4"-PB-SC-160560-N 1"X3/4" HV-SRC-963-001 HV-SRC-963-002 MAN-SRC-963-A MAN-SRC-963-B

09203 632816 INSTRUMENT AIR RECEIVER 1/2"-HI-SE-160280-N HV-SRB-166-170 QUICK DISCONNECT FH-HI-160280-01 SAM-SRC-671

WEIGH SCALE NOTE 7 SCL-SRC-671 WT-SRC 171-014

09221 632816 INSTRUMENT AIR RECEIVER 1/2"-HI-SE-162506-N

NOTES:

1. DENOTES VALVES HAVING POSITION SWITCHES SHOWN IN "TYPICAL POSITION SWITCH" SKETCH. SEE DWG. 632758. USE AN "A" SUFFIX FOR SAMPLE VALVE DCS POSITION SWITCHES.
2. (N2) SEE DETAIL ON DWG. 632758 AND LS-19-004.
3. (P) SEE DETAIL ON DWG. 632758 AND LS-19-004.
4. DELETED
5. DELETED
6. DELETED
7. VALVES/READOUTS CONTROLLED/VIEWED ON LOCAL PANEL AT WINDOW.
8. DELETED
9. DELETED
10. DELETED
11. DELETED
12. DELETED
13. DELETED
14. VALVE IS MANIPULATOR OPERATED. LOCATE VALVE NEAR VESSEL.
15. DELETED.
16. TEMPORARY CONNECTION TO 1/2"-NA-SG-160318-N IS MADE BY FLEXIBLE HOSE FROM NA-SG-160603 (P&ID 632822).
17. THE QUALITY LEVEL AND ASSOCIATED QUALITY LEVEL DETERMINATION FOR EQUIPMENT, INSTRUMENTS, AND COMPONENTS ON THIS DRAWING ARE IDENTIFIED ON THE "MTU PROJECT EQUIPMENT LIST" AS MAINTAINED UNDER MCC-3350, DATA MANAGEMENT OF CONFIGURATION MANAGED FIELDS IN THE MTU PROJECT EQUIPMENT LIST.
18. THE ACTUATOR FOR HV-SRC-191-022 HAS BEEN EQUIPPED WITH A CORROSION RESISTANT ENCLOSURE.
19. PI-SRC-173-001 CLEARING PURGE CONNECTION SHOWN ON 768713, TUBING NUMBER 1/2" NR-SE-162729
20. (N2) SEE MANUAL PURGE DETAIL THIS SHEET.

FDC-11126

FDC-11126

N2
TTT-NNNP

N2 SUPPLY FOR PULSES AND PURGES FROM STAND STND-SRC-624B (DRAWING 570005)

NRV-AAA-TTT-XXXX

NRV-AAA-TTT-XXXX TO LINE

AAA = AREA
TTT = TEAM MEMBER
NNN = 020 THRU 100

MANUAL N2 PURGE DETAIL

REVISION HISTORY

REV	DESCRIPTION
10	AS-BUILT AS OF 4/22/2015, INCORP'D FDC-5916, 10301, 10421;
11	AS-BUILT AS OF 10/26/2016, INCORP'D FDC-10705 SEE DRF-304370
12	AS-BUILT AS OF 11/14/2017, INCORP'D FDC-11058, 11012, UPDATED TITLE BLOCK. SEE DRF-304678

THIS DRAWING MARKUP COVERS CHANGES APPROVED BY THE FOLLOWING FDC'S:

FDC-11126

PROFESSIONAL ENGINEER REGISTERED 4307 STATE OF IDAHO JEREMY EASTMAN

I CERTIFY THE CHANGES SHOWN ON THIS DRAWING REFLECT THE CURRENT CONSTRUCTED CONDITION AS OF 01/04/2017

Idaho Cleanup Project — Fluor Idaho

INTEC CPP-1696
INTEGRATED WASTE TREATMENT UNIT
PIPING & INSTRUMENT DIAGRAM

SAMPLE TRANSFER

SIGNATURES/DATES APPLY TO CURRENT RELEASE ONLY

	SIGN AND DATE
DESIGN: NA	– –
DRAFTER: J. J. MONCUR	
TECHNICAL CHECK: NA	– –
ENG GROUP SUPERVISOR: NA	– –
DESIGN LEAD/AUTHORITY: NA	– –
DRAFTING CHECK/ EFFECTIVE DATE: K. KELLER	

NO SCALE

DESIGN PHASE:
QUALITY LEVEL: SEE NOTE 17
HORIZONTAL SCALE: NONE
VERTICAL SCALE: NA
FOR DRAWING INDEX SEE DRAWING NO. 632756
PROJECT NUMBER: 25051

INDEX CODE NUMBER			
AREA	TYPE	DL	DRG
200	1696	24	136

SIZE D | DWG- 632793 12F1 | REV
DRF NO. – | SHEET P-44

ID: CHADMA
Date: 05/17/17 – 12:29 PM Layout Name: Sht 1
Doc: 11126 Sample B
File: 632793_12F1.dwg
Path: J:\CHADMA\FDN\FDC\

F-SRH-140-A/-B/-C/-D
PROCESS HEPA FILTERS

THIS MARKUP COVERS CHANGES APPROVED ON THE FOLLOWING FDCs:

TM FDC-10395
FDC-10882
FDC-10965
FDC-11263

REV	DESCRIPTION
13	AS-BUILT AS OF 05/27/2015, INCORP'D
	FDC-10275, 10301, SEE DRF-345581
	SUBMITTAL TO STATE FOR RCRA PERMIT
	PRIOR HISTORY REMOVED

REVISION HISTORY

NOTES

1. EACH HEPA FILTER HAS THE FOLLOWING FEATURES THAT ARE NOT SHOWN: PROVISIONS FOR PERIODIC RADIATION TESTS; DOP TEST PORTS UPSTREAM AND DOWNSTREAM OF EACH HEPA; PROVISIONS FOR OTHER MANDATORY TESTS AND DOP TEST FLOW ADJUSTER.
2. DELETED.
3. DELETED
4. GAS-TIGHT SHUT-OFF VALVE NEEDED FOR HEPA DRAIN LINES TO ENSURE NO OFF-GAS DISCHARGE THROUGH LINE. THIS VALVE IS CONNECTED TO FIRE PROTECTION SYSTEM.
5. SEE TYPICAL CONTROL VALVE DWG. 632758.
6. FOR A COMPLETE LIST OF RSS RESPONSES SEE DWG 632755.
7. DELETED.
8. DELETED.
9. DELETED.
10. ONE FIRE PROTECTION SPRAY NOZZLE IS PROVIDED 12" IN FRONT OF EACH PREFILTER AND FIRST STAGE HEPA FILTER.
11. (N, P) SEE DETAILS DWG. 632758
12. DELETED.
13. AREA DESIGNATION FOR PURGE IS SRH.
14. HEPA DRAIN VALVE CONTROLLED BY FIRE SYSTEM BUT DCS ALSO MONITORS POSITION.
15. THE INLET AND OUTLET PROCESS HEPA FILTERS VALVES ARE PART OF THE HEPA HOUSING.
16. REFERENCE FIRE PROTECTION DRAWING 634381, FIRE ALARM SYSTEM SINGLE LINE DIAGRAM.
17. (N2) SEE TYPICAL PURGE DETAILS ON DWG. 632758.
18. DELETED.
19. THE QUALITY LEVEL AND ASSOCIATED QUALITY LEVEL DETERMINATION FOR EQUIPMENT, INSTRUMENTS, AND COMPONENTS ON THIS DRAWING ARE IDENTIFIED ON THE "INTU PROJECT EQUIPMENT LIST" AS MAINTAINED UNDER MCP-3550, DATA MANAGEMENT OF CONFIGURATION MANAGED FIELDS IN THE INTU PROJECT EQUIPMENT LIST.
20. DELETED.
21. UT INSPECTION LOCATION – BOTTOM OF THE HEPA FILTERS INLET MANIFOLD – SEE PLAN PLN-4579 FOR MORE INFORMATION.

I CERTIFY THAT THIS DRAWING REFLECTS THE CURRENT CONSTRUCTED CONDITION AS OF 05/27/2015

NO SCALE

DESIGN PHASE:	
QUALITY LEVEL:	SEE NOTE 19
HORIZONTAL SCALE	NONE
VERTICAL SCALE	NA
FOR DRAWING INDEX SEE DRAWING NO.	632756
SIGNATURES/DATES APPLY TO CURRENT RELEASE ONLY	SIGN AND DATE
DESIGN: NA	– –
DRAFTER: J. MONCUR	
TECHNICAL CHECK: NA	– –
ENG GROUP SUPERVISOR: NA	– –
DESIGN LEAD/AUTHORITY: NA	– –
DRAFTING CHECK/ EFFECTIVE DATE: K. KELLER	

Idaho Cleanup Project

INTEC CPP-1696
INTEGRATED WASTE TREATMENT UNIT
PIPING & INSTRUMENT DIAGRAM
PROCESS HEPA FILTERS

PROJECT NUMBER: 25051			
INDEX CODE NUMBER			
AREA	FAC	SYS	DRAW
200	1696	24	136

SIZE E | DWG- 632797 | REV 13 | F4

DRF NO. -- | SHEET P-48

File: 632797-13F4.dwg
Path: I:\Field Engineering\FDN (28) FDN Document Setup Files\632797\632797-13.dgn
Date: 07/25/17 - 10:21 AM Layout Name: 632797
ID: K.KEYAL

F-SRH-141-A/-B
MERCURY
ADSORBER

BED B

BED A

F-SRH-141-B

F-SRH-141-A

1/2"-NR-SG-160896-N

1/2"-NR-SK-161944-N

NRV-SRH-141-079

NRV-SRH-141-051 NRV-SRH-141-052

16"-VG-SK-161087-H

1"-FW-NJ-160668-N

07802 632827
FIREWATER

3"-NR-SG-161337-N

07304 632808
NITROGEN

PCV-SRH 141-010

1"-FW-NJ-161620-H

FWV-SRH-1696-483E

FWV-SRH-1696-483D

NOTE 3

VGV-SRH-141-170

3/4" SK

VGV-SRH-141-112

NRV-SRH-141-135

FWV-SRH-1696-483C

PDIT-SRH 141-017B

PD-H 141-17B

PDI-SRH 141-018B

N2 141-087P NOTE 11,12

TE-SRH 141-030B

TE-SRH 141-031B

TE-SRH 141-032B

TE-SRH 141-033B

TE-SRH 141-034B

TE-SRH 141-035B

TE-SRH 141-036B

TE-SRH 141-037B

TE-SRH 141-038B

TE-SRH 141-039B

LSH-H 141-1B

LSH-SRH 141-001B

LE-SRH 141-001B

TIT-SRH 141-022B

TIT-SRH 141-020B

TIT-SRH 141-023B

TIT-SRH 141-021B

T-H 141-22B

T-H 141-20B

T-H 141-23B

T-H 141-21B

T-H 141-5B

T-H 141-5B

TIT-SRH 141-005A

TIT-SRH 141-005B

TE-SRH 141-005A

TE-SRH 141-005B

3/4" PORT AND CAP

3/4" VGV-SRH-141-005

1"-NR-SG-161950-N SET @ 10 PSIG

VENT TO OUTSIDE OF BLDG

PSV-SRH 141-008

PCV-SRH 141-002

1/2"-NR-SG-161951-N

07320 632808
NITROGEN

1/2"-NR-SG-160895-N

1/2"-NR-SG-160897-N

07801 632827
FIREWATER

1"-FW-NJ-160669-N

05001 632797
PROCESS HEPA FILTERS

16"-VG-SK-161084-H

VGV-SRH-141-142
NOTE 16

3"-NR-SK-161921-N

MINIMUM DISTANCE

16"-VG-SK-160721-H

6"-VG-SK-160902-H

MINIMUM DISTANCE

16"-VG-SK-160901-H

3/4" PORT AND CAP

4" PORT AND CAP

8"-VG-SK-160547-H

8"-VG-SK-160546-H

05105 632799
TO BUILDING EXHAUST

05105 632799
TO PROCESS EXHAUST

16"-VG-SK-161087-H

05101 632799
TO PROCESS EXHAUST BLOWERS

4"-VG-SK-160894-H

4"-VG-SK-160893-H

6"-VG-SK-160900-H

4"-SW-SA-160508-N

05102 632822
DRAIN TO HEPA FIREWATER COLLECTION TANK

2"-VG-SK-161626-H

2"-VG-SK-161617-H

SWV-SRH-141-113 SK 5A

SWV-SRH-141-032 2"X4"

SWV-SRH-141-037 2"X4"

SWV-SRH-141-135 3/4"

VWV-SRH-141-056

VWV-SRH-141-055 SK 5B

VGV-SRH-141-087 3/4"

VGV-SRH-141-088 3/4"

VGV-SRH-141-150 3/4"

VGV-SRH-141-160 3/4"

VGV-SRH-141-111 3/4"

VGV-SRH-141-138 3/4"

PSV-SRH 141-007B SET @ 3 PSIG

PSV-SRH 141-007A SET @ 3 PSIG

PSE-SRH 141-001B

PSE-SRH 141-001A

SEE NOTE 17

SEE NOTE 17

SIF 1 OPEN

SIF 2 TRIP 632766 E 3

SIF 3 TRIP SSIS 632799 E 3

632760 E 3

632760 D 6

HS-H 141-14B

HY-SRH 141-014B

HS-H 141-16B

HY-SRH 141-016B

HS-H 141-17B

HY-SRH 141-017B

HS-H 141-13B

HY-SRH 141-013B

HS-H 141-16A

HY-SRH 141-016A

HS-H 141-17A

HY-SRH 141-017A

HS-H 141-14A

HY-SRH 141-014A

HS-H 141-11A

HY-SRH 141-011A

HS-H 141-7

HY-SRH 141-007

TD-H 141-2

632797 D5002
MERCURY ADSORBER INLET TEMPERATURE

TSHH

RSS (E26) NOTE 6

RSS (E31) NOTE 6

RSS (E30) NOTE 6

RSS (E39) NOTE 6

RSS NOTE 6

UT INSPECTION LOCATION, SEE NOTE 18

LINEAR DETECTOR PANEL

TTSH-SRH-141-010

TAH-SRH-141-010A

SEE NOTE 13

CONTROL RM

NOTE 1

NOTE 10

NOTE 11,12

NOTES

1. DENOTES VALVES HAVING POSITION SWITCHES AS SHOWN ON DWG 632758.
2. DELETED.
3. FILL PORTS (TYP 2 TOTAL).
4. DELETED.
5. DELETED.
6. FOR COMPLETE LIST OF RSS RESPONSES SEE DWG 632755.
7. DELETED.
8. CHANGED INSTRUMENT AND VALVE TAG NUMBERS PER MCP-3785 AND EQUIPMENT TAG NUMBERS PER DCN-INTU-115.
9. PROCESS SKID PACKAGE BOUNDARIES REMOVED.
10. SAME PLANE, 90 DEGREES APART.
11. AREA DESIGNATION FOR PURGE IS SRH.
12. SEE TYPICAL PURGE DETAILS ON DWG 632758.
13. CONNECTED TO LOCAL FIRE ALARM PANEL.
14. THE QUALITY LEVEL AND ASSOCIATED QUALITY LEVEL DETERMINATION FOR EQUIPMENT, INSTRUMENTS, AND COMPONENTS ON THIS DRAWING ARE IDENTIFIED ON THE "INTU PROJECT EQUIPMENT LIST" AS MAINTAINED UNDER MCC-3350, DATA MANAGEMENT OF CONFIGURATION MANAGED FIELDS IN THE INTU PROJECT EQUIPMENT LIST.
15. DELETED.
16. VALVE IS EQUIPPED WITH A CHAINWHEEL OPERATOR.
17. VALVES VWV-SRH-141-055 AND VWV-SRH-141-056 HAVE BEEN DISABLED IN THE OPEN POSITION BY REMOVAL OF THEIR INTERNALS; THE REVISED OPERATIONAL STATE FOR THESE VALVES IS "ALWAYS OPEN".
18. CORROSION MONITORING DESIGNATED LOCATION, SEE PLN-4579.

REVISION HISTORY

REV	DESCRIPTION
19	AS-BUILT AS OF 06/26/2014, UPDATED TITLEBLOCK REMOVED LD REFERENCE, SEE EWF-36699
	PRIOR HISTORY REMOVED
20	AS-BUILT AS OF 09/19/2017, INCORP'D EDC-10965, UPDATED TITLE BLOCK, SEE EWF-39657

I CERTIFY THE CHANGES SHOWN ON THIS DRAWING REFLECT THE CURRENT CONSTRUCTED CONDITION AS OF 09/19/2017
Randy Eastman
Fluor Idaho
2017.09.27 11:06:06'00'
PROFESSIONAL ENGINEER 4307 STATE OF IDAHO RANDY EASTMAN

Fluor IDAHO

Idaho Cleanup Project Core

INTEC CPP-1696
INTEGRATED WASTE TREATMENT UNIT
PIPING & INSTRUMENT DIAGRAM
MERCURY ADSORBERS

SIGNATURES/DATES APPLY TO CURRENT RELEASE ONLY

	SIGN AND DATE
DESIGN: NA	-- --
DRAFTER: A. KEY	Angela L Key Portage 2017.08.27 11:47:19 -06'00'
TECHNICAL CHECK: NA	-- --
CNC GROUP SUPERVISOR: NA	-- --
DESIGN LEAD/AUTHORITY: J. DEATHERAGE	John T Deatherage FLUOR IDAHO 2017.09.27 11:22:44 -06'00'
DRAFTING CHECK/ EFFECTIVE SIGN: K. KELLER	Kris Keller FLUOR IDAHO 2017.08.27 11:58:42 -06'00'

NO SCALE

DESIGN PHASE:

QUALITY LEVEL: SEE NOTE 14

HORIZONTAL SCALE: NONE

VERTICAL SCALE: NA

FOR DRAWING INDEX SEE DRAWING NO. 632756

PROJECT NUMBER: 25051

INDEX CODE NUMBER			
AREA	TYPE	SEQ	SHEET
200	1696	24	136

SIZE E | DWG- 632798 | REV 20

DOP NO. 328567 | SHEET P-49

PWT-E1-REV 2014-01-29

BLO-SRH-240-A /-B
PROCESS EXHAUST
BLOWERS

TK-SRH-141
OFF-GAS CONDENSATE
COLLECTION TANK

P-SRH-241
OFF-GAS CONDENSATE
TRANSFER PUMP

SPL-SRH-941
CONTINUOUS EMISSION
MONITORING SYSTEM (CEMS)

MIX-SRE-140
AIR MIXING BOX

STK-SRE-140
STACK

SPL-SRH-940
RADIATION MONITORING
SYSTEM (RMS)

INSTALL NOZZLE EXTENSION ON 4" TEST PORT NEXT TO VGV-SRH-240-107. REFER TO PIPING ISOMETRIC VG-161095-3 FOR FABRICATION DETAILS. INSTALL CORROSION COUPON HOLDERS IN BOTH 4" TEST PORTS INDICATED. PER TM FDC-10395. REFER TO PIPING ISOMETRIC VG-161095-3 FOR INSTALLATION DETAILS. NOTE: THIS IS A TEMPORARY INSTALLATION AND AS SUCH THIS P&ID IS NOT TO BE AS-BUILT TO INCLUDE THIS TEMPORARY CONDITION. TM FDC-10395

THIS MARKUP COVERS CHANGES APPROVED ON THE FOLLOWING FDCs:

TM FDC-10395
FDC-10882
FDC-11263
FDC-10965
FDC-11240
FDC-11273

05105 632798 VENT FROM MERCURY ADSORBERS
8"-VG-SK-160546-H
633453 BUILDING HVAC EXHAUST DUCT
633453 BLDG. VENTILATION
68"-VN-SG-161627-N
633455 STACK VELOCITY
TO ATMOSPHERE
1"-VN-SE-162002-N
05007 632797 P-H-140-1A
05005 632797 P-H-260-3
SEL
8"-VG-SG-161087-N
8"-VG-SG-161095-N
8"x12"
VGV-SRH 250-002
BLO-SRH-250
FDC-11263
12"-VG-SK-161095-H
12"-VG-SK-161087-H
VGV-SRH 250-001
UT INSPECTION LOCATION SEE NOTE 22
(VENDOR SUPPLIED)
SAMPLE FLOW FILTER F-H-940-8
SAMPLE FLOW RAD F-H-940-7
HEAT TRACE FAILURE YA-H-940-7
PDSH-E 140-8
RSH-H 940-7
FILTER ENCLOSURE HEATER FAILURE YA-E-140-8
F-E 140-1
P-E 140-1
F-E 140-2
SPL-SRH-940 RMS
TE-SRE 140-001
PIT-SRE 140-001
FIT-SRE 140-001
1" TUBE
STK-SRE-140
HEAT TRACE
PDSH-SRE 140-008
HEATER
IODINE SAMPLE CONTAINER
F-SRE-140-008
PROBE SEAL
VNV-SRE-160-062
VNV-SRE-140-060
NOTE 17
SEE NOTE 19
SWV-SRE-140-002
SWV-SRE-140-001
2"-SW-SK-160875-H
QUICK DISCONNECT WITH BODY PROTECTOR
16"-VG-SK-161087-H
VGV-SRH-240-090
05101 632798 FROM MERCURY ADSORBER
VENDOR SUPPLIED SEE NOTE 21
P-H-240-XX
SEE NOTE 21
PT-SRH 240-XX
LO RANGE
HI RANGE
TO BLOWER SHAFT SEALS
SEE NOTE 24
TO BLOWER SHAFT WIPER
PT-SRH 240-YY
P-SRH 240-YY
768721
TO BLOWER PURGE PANELS
BLOWER PURGE PANELS
632797 TO 10"-VN-160802
2"-NR-SG-161650
PSV-SRH 240-001
PSV-SRH 240-002
SET @ 15 PSIG
2"x1"
2"x1/2"
1"x3/4"
HS-H 240-1
HV-SRH 240-001
HV-SRH 240-015
3/4"x1/2"
NRV-SRH-240-013
NRV-SRH-240-014
NRV-SRH-240-096
PCV-SRH 240-010
PI-SRH 240-020
1/2"
NRV-SRH-240-015
NRV-SRH-240-016
PI-SRH 240-002
NRV-SRH-240-058
1/2"-NR-SG-160919-N
07322 632808 NITROGEN
NRV-SRH-240-010
NRV-SRH-240-095
FDC-10882
NRV-SRH-240-020
NRV-SRH-240-018
NRV-SRH-240-019
NRV-SRH-240-017
PCV-SRH 240-011
PI-SRH 240-021
1/2"
NRV-SRH-240-012
NRV-SRH-240-022
NRV-SRH-240-021
NRV-SRH-240-011
NRV-SRH-240-007
NRV-SRH-240-008
NRV-SRH-240-009
NRV-SRH-240-017
632798 05108 MERCURY ADSORBERS
4"-VG-SK-161095-H
HEAT TRACE
PC-H 240-10A
HS-H 240-10A
V-H 240-1A
V-H 240-2A
HS-H 240-11A
HS-H 240-9A
SC-SRH 240-010A
VIT-SRH 240-001A
VIT-SRH 240-002A
NOTE 2 VFD
RSS(P10) NOTE 6
HY-SRH 240-009A
HV-SRH 240-009A
NOTE 3
18"x16"
FO
IA
EJ-VG-161087-03
EJ-VG-161095-01
3/4" SK NRV-SRH-240-065-A, -B, -C, -D, -E, -F, -G SEE NOTE 9
BLO-SRH-240-A
HV-SRH 240-011A
3/4"x1/2"
FDC-10882
PC-H 240-10B
HS-H 240-10B
V-H 240-1B
V-H 240-2B
HS-H 240-11B
HS-H 240-9B
SC-SRH 240-010B
VIT-SRH 240-001B
VIT-SRH 240-002B
(P16) RSS NOTE 6
HY-SRH 240-009B
HV-SRH 240-009B
EJ-VG-161087-02
EJ-VG-161095-02
3/4" SK NRV-SRH-240-066-A, -B, -C, -D, -E, -F, -G SEE NOTE 9
BLO-SRH-240-B
HV-SRH 240-011B
HV-SRH NOTE 3 240-015
4"-VG-SK-161095-H
HEAT TRACE
FDC-10882
VGV-SRH-240-091
VGV-SRH-240-101
VGV-SRH-240-103
VGV-SRH-240-105
VGV-SRH-240-106
VGV-SRH-240-108
VGV-SRH-240-109
VGV-SRH-240-110
VGV-SRH-240-093
VGV-SRH-240-094
VGV-SRH-240-092
P-H 240-5
PIT-SRH 240-005
PIT-SRH 240-001
F-H 240-1
FAH
FAL
YY-SRH 240-001
V/I
T-H 240-6
TIT-SRH 240-006
TE-SRH 240-006
UT INSPECTION LOCATION SEE NOTE 22
CERTIFICATION TEST PORTS (90° APART, SAME PLANE)
(SP)
(SAMPLE)
FE-SRH 240-001
EJ-VG-161095-03
SEE NOTE 22
16"-VG-SK-161095-H
DRAIN 3/4"
68"-VN-SG-161628-N
MIX-SRE-140
FDC-10965
HEAT TRACE
SPL-SRH-941 CEMS SEE NOTE 20
(VENDOR SUPPLIED)
AE-SRH 941-002A
AE-SRH 941-002B
AE-SRH 941-003A
AE-SRH 941-003B
FLOW F-H 240-1
CEMS 2 CAL FAIL YA-H 941-2A
CEMS 1 CAL FAIL YA-H 941-1A
CONDITIONER 2 FAIL YA-H 941-2C
CONDITIONER 1 FAIL YA-H 941-1C
PLC FAIL YA-H 941-001
CEMS CONTROL PANEL
AYT-SRH 941-002A
AYT-SRH 941-002B
AYT-SRH 941-003A
AYT-SRH 941-003B
YA-SRH 941-002C
YA-SRH 941-001C
YA-SRH 941-001
YA-SRH 941-001A
NOTE 1
PVC PIPE COUPLING
AQ-H 941-3A 60 MIN
AQ-H 941-3C 1 MIN
AQ-H 941-3E 10 MIN
CEMS 2 CAL FAIL
CEMS 1 CAL FAIL
CONDITIONER 2 FAIL
CONDITIONER 1 FAIL
A-H 941-2A
A-H 941-1A
A-H 941-2C
A-H 941-1C
1 MIN AVE.
RSS (E6) ASHH
NOTE 6
AVE.
3/4" x 1/2"
1/2" x 1/4"
1"
1" x 1/2"
1/2"
1/4"
INSIDE BLDG. OUTSIDE
HIV-SRH-941-629
HIV-SRH-148-153
FDC-11240
1/2"-VN-SG-161936-N
VENT INTO HVAC EXHAUST DUCT FROM CEMS ROOM
3/4"-VG-SK-161936-H
SWV-SRH-140-197
SWV-SRH-141-189
CLEANOUT
TC-SRE 140-A
2"x1"
2" x 1"
CONTROL PANEL
HS-SRH 241-001 H-O-A
ALARMS ARE BELL AND LIGHTS ON CONTROL PANEL ONLY
SECONDARY TANK LEAK DETECTION SWITCH
LSH-SRH 141-005
PUMP ON
PUMP OFF
HIGH LEVEL ALARM
P-SRH-241
TK-SRH-141
DOUBLE WALL TANK
LIT-SRH 141-001
LT-SRH 141-001
FH-SW-161-962
FH-SW-161-959
1"-SW-SK-161959-N
SEE NOTE 19
SWV-SRH-241-131
SWV-SRH-241-132
VENDOR SUPPLIED
1"-VN-SE-161936-H
1/4"
1/2"
632765 05094 INLET CO
ASH
FAULT
I-SRH-I 240-007AS
I-SRH-I 240-007BS
I-SRH-I 240-007CS
AI-SRH 240-007A
AI-SRH 240-007B
AI-SRH 240-007C
AY-SRH 240-007A
AY-SRH 240-007B
AY-SRH 240-007C
YS-H 240-7A
YS-H 240-7B
YS-H 240-7C
2/3
NOTE 15
N2
240-086P
240-087P
240-088P
240-089P
240-090P
240-091P
240-082P
240-084P
240-085P
NRV-SRH-240-186
NRV-SRH-240-174
NRV-SRH-240-183
NRV-SRH-240-184
NRV-SRH-240-185
NRV-SRH-240-176
SWV-SRH-241-200
SWV-SRH-241-198
PI-SRH 141-001
3/8"
3/4"x3/8"
3/4"-SW-SK-161907-N
05201 632760 OFF-GAS CONDENSATE TO WFT
VGV-SRH 240-072
VGV-SRH 240-070
VGV-SRH 240-074
VGV-SRH 240-071
VGV-SRH 240-073
VGV-SRH 240-075
VGV-SRH 240-076
VGV-SRH 240-069
FD-SRH 240-007A
FD-SRH 240-007B
FD-SRH 240-007C
FDC-11273
TC-SRH 240-002
TC-SRH 240-001
AE-SRH 240-007A
AE-SRH 240-007B
AE-SRH 240-007C
4"x2"
4"x4"
HEAT TRACE
TO 10"-VN-160802
632797
2"-NR-SG-161650
2"x1"
2"x1/2"
1"x3/4"
HS-H 240-15
FDC-10882
4"-VG-SK-161095-H
HEAT TRACE
632798 05108 MERCURY ADSORBERS

RADIATION AREA MONITORING SYSTEM

RAMS UNIT 01
RAMS UNIT 02
RAMS UNIT 03
RAMS UNIT 04
RAMS UNIT 05
RAMS UNIT 06
RAMS UNIT 07
RAMS UNIT 08
RAMS UNIT 09
GAMMA
RE-SRC 697-001
RIT-SRH 697-001
R-C 697-1
RAH
R-H 697-1
RE-SRC 697-002
RIT-SRH 697-002
R-C 697-2
R-H 697-2
RE-SRC 697-003
RIT-SRH 697-003
R-C 697-3
R-H 697-3
RE-SRC 697-004
RIT-SRH 697-004
R-C 697-4
R-H 697-4
RE-SRC 697-005
RIT-SRH 697-005
R-C 697-5
R-H 697-5
RE-SRC 697-006
RIT-SRH 697-006
R-C 697-6
R-H 697-6
RE-SRC 697-007
RIT-SRH 697-007
R-H 697-7
RE-SRB 697-008
RIT-SRH 697-008
R-B 697-8
RE-SRS 697-009
RIT-SRS 697-009
R-S 697-9

OXYGEN MONITORING SYSTEM

OXYGEN UNIT 01
OXYGEN UNIT 02
OXYGEN UNIT 03
OXYGEN UNIT 04
OXYGEN UNIT 05
OXYGEN UNIT 06
OXYGEN UNIT 07
OXYGEN UNIT 14
AIT-SRB 698-001
AM-SRB 698-001
AAL 698-001
AAH 698-001
A-B 698-1
O2 698-1
AIT-SRB 698-002
AM-SRB 698-002
AAL 698-002
AAH 698-002
A-B 698-2
O2 698-2
AIT-SRB 698-003
AM-SRB 698-003
AAL 698-003
AAH 698-003
A-B 698-3
O2 698-3
AIT-SRB 698-004
AM-SRB 698-004
AAL 698-004
AAH 698-004
A-C 698-4
O2 698-4
AIT-SRB 698-005
AM-SRB 698-005
AAL 698-005
AAH 698-005
A-C 698-5
O2 698-5
AIT-SRB 698-006
AM-SRB 698-006
AAL 698-006
AAH 698-006
A-C 698-6
O2 698-6
AIT-SRB 698-007
AM-SRB 698-007
AAL 698-007
AAH 698-007
A-H 698-7
O2 698-7
AIT-SRB 698-014
AM-SRB 698-014
AAL 698-014
AAH 698-014
A-C 698-14
O2 698-14
OXYGEN UNIT 08
OXYGEN UNIT 09
OXYGEN UNIT 10
OXYGEN UNIT 11
OXYGEN UNIT 12
OXYGEN UNIT 13
AIT-SRB 698-008
AM-SRB 698-008
AAL 698-008
AAH 698-008
A-H 698-8
O2 698-8
AIT-SRB 698-009
AM-SRB 698-009
AAL 698-009
AAH 698-009
A-H 698-9
O2 698-9
AIT-SRB 698-010
AM-SRB 698-010
AAL 698-010
AAH 698-010
A-B 698-10
O2 698-10
AIT-SRB 698-011
AM-SRB 698-011
AAL 698-011
AAH 698-011
A-C 698-11
O2 698-11
AIT-SRB 698-012
AM-SRB 698-012
AAL 698-012
AAH 698-012
A-C 698-12
O2 698-12
AIT-SRB 698-013
AM-SRB 698-013
AAL 698-013
AAH 698-013
A-H 698-13
O2 698-13

RSS (P11) NOTE 6
JS-B 120-1
ELECTRICAL POWER LOSS
FROM JS-E-125-58 DWG 633562
FROM JS-E-120-8 DWG 633561
JS-B 111-1
UPS "TROUBLE"
JS-SRB 111-001
SUPS-SRB-111 UPS
RSS (P3) SEE NOTE 6
XSH 023-1
XSH 023-2
XSH 023-3
EXISTING NWCF SEISMIC SWITCHES
HS-B 135-3
RSS 23
NOTE 6
HS-B 135-1
HS-B 135-2
HS-SRB 135-001
HS-SRB 135-002
MANUAL SHUTDOWN SWITCH (CONTROL ROOM)

CAMS UNIT 01A ALPHA RAH RE-SRC 696-001A
CAMS UNIT 02A ALPHA RAH RE-SRC 696-002A
CAMS UNIT 06A ALPHA RAH RE-SRC 696-006A
CAMS UNIT 01B BETA/GAMMA RAH RE-SRC 696-001B RYT-SRC 696-001B R-C 696-1B BETA/GAMMA
CAMS UNIT 02B BETA/GAMMA RAH RE-SRC 696-002B RYT-SRC 696-002B R-C 696-2B BETA/GAMMA
CAMS UNIT 03B BETA/GAMMA RAH RE-SRC 696-003B RYT-SRC 696-003B R-B 696-3B BETA/GAMMA
CAMS UNIT 04B BETA/GAMMA RAH RE-SRC 696-004B RYT-SRC 696-004B R-C 696-4B BETA/GAMMA
CAMS UNIT 05B BETA/GAMMA RAH RE-SRC 696-005B RYT-SRC 696-005B R-C 696-5B BETA/GAMMA
CAMS UNIT 06B BETA/GAMMA RAH RE-SRC 696-006B RYT-SRC 696-006B R-C 696-6B BETA/GAMMA
CAMS UNIT 07B BETA/GAMMA RAH RE-SRC 696-007B RYT-SRH 696-007B R-H 696-7B BETA/GAMMA
CAMS UNIT 08B BETA/GAMMA RAH RE-SRC 696-008B RYT-SRH 696-008B R-H 696-8B BETA/GAMMA
CAMS UNIT 09B BETA/GAMMA RAH RE-SRC 696-009B RYT-SRC 696-009B R-C 696-9B BETA/GAMMA
CAMS UNIT 10B BETA/GAMMA RAH RE-SRC 696-010B RYT-SRH 696-010B R-H 696-10B BETA/GAMMA
CAMS UNIT 12B BETA/GAMMA RAH RE-SRC 696-012B RYT-SRC 696-012B R-S 696-12B BETA/GAMMA

NOTES

1. ORIGINAL SST CEMS CONDENSATE LINE ABANDONED IN PLACE.
2. SEE TYPICAL MOTOR DETAIL ON DWG. 632758.
3. DENOTES VALVE WITH TYPICAL POSITION SWITCH SEE 632758.
4. CONDENSATE DRAIN TUBES FROM THE CEMS CABINET, 8 TOTAL. DETAILS IDENTIFIED IN VENDOR DRAWING 777588.
5. NOT USING CEMS CO MEASUREMENTS FOR GACC FIRE RSS.
6. FOR A COMPLETE TABLE OF RSS RESPONSES SEE DWG 632755.
7. DELETED.
8. DELETED.
9. PROVIDE ONE DRAIN VALVE ON EACH VOLUTE OF MULTI-STAGE BLOWER.
10. AREA DESIGNATION FOR PURGE IS "SRH".
11. STACK SAMPLE NOZZLES TO BE 90 DEGREES APART ON THE SAME PLANE FOR CERTIFICATION TESTS.
12. DELETED.
13. SHROUDED PROBE STACK SAMPLER AND INLET/OUTLET PIPING TO RMS TO BE PROVIDED BY VENDOR IN ACCORDANCE WITH ANSI/HPS N13.1-1999.
14. DELETED.
15. SEE TYPICAL PURGE DETAIL ON DWG. 632758.
16. DELETED.
17. STACK FLANGE CONNECTION TO BE COMPATIBLE WITH STACK STUB-OUT MATERIAL.
18. THE QUALITY LEVEL AND ASSOCIATED QUALITY LEVEL DETERMINATION FOR EQUIPMENT, INSTRUMENTS, AND COMPONENTS ON THIS DRAWING ARE IDENTIFIED ON THE "INTU PROJECT EQUIPMENT LIST" AS MAINTAINED UNDER MCP-3350, DATA MANAGEMENT OF CONFIGURATION MANAGED FIELDS IN THE INTU PROJECT EQUIPMENT LIST.
19. THIS LINE TO BE LABELED AS "HAZARDOUS WASTE"
20. NOT ALL SYSTEM DCS CONNECTIONS ARE SHOWN. FOR A COMPLETE LIST OF SIGNALS SEE CEMS ENVIRONMENTAL DWG 50177A04 SHT 6.
21. BLOWER PURGE PANEL, TYPICAL OF FOUR.
PNL-SRH-240A-001, INLET, PT-SRH-240-009A, P-H-240-9A
PNL-SRH-240A-002, OUTLET, PT-SRH-240-011A, P-H-240-11A
PNL-SRH-240B-001, INLET, PT-SRH-240-009B, P-H-240-9B
PNL-SRH-240B-002, OUTLET, PT-SRH-240-011B, P-H-240-11B
PI AND FI NOT GIVEN INSTRUMENT NUMBERS
FOR BLOWER PURGE PANEL DETAILS, INCLUDING FI ISOLATION VALVE NUMBERS, SEE DRAWING 778358
22. CORROSION MONITORING DESIGNATED LOCATION, SEE PUN-4578.
23. QUICK CONNECT FITTING INSTALLED IN THE LID OF THE CONDENSATE COLLECTION TANK (TK-SRH-141). FACILITATES TRANSFER OF CONDENSATE FROM THE BLOWER DRAIN MANIFOLDS ONTO A PORTABLE CONTAINER (CARBOY) WHICH IS HAND-CARRIED AND DRAINED DIRECTLY INTO THE TANK.
24. BLOWER SHAFT WIPER SEAL PANEL, TYPICAL OF FOUR.
PNL-SRH-240A-005, INLET, PI & PT-SRH-240-009C, P-H-240-9C
PNL-SRH-240A-006, OUTLET, PI & PT-SRH-240-011C, P-H-240-11C
PNL-SRH-240B-005, INLET, PI & PT-SRH-240-009D, P-H-240-9D
PNL-SRH-240B-006, OUTLET, PI & PT-SRH-240-011D, P-H-240-11D
FI NOT GIVEN INSTRUMENT NUMBERS.
25. CAP LINE 3/4"-SW-SK-161902-N AT WEST END OF HORIZONTAL LEG LOCATED ABOUT 7'-0" ELEVATION AND ADD TWO TEES AND TUBING ADAPTERS. REMOVE VERTICAL SECTION OF PIPE AND VALVE, SWV-SRH-241-196 AT WEST SIDE OF CEMS CABINET. FDC-11240

REV	DESCRIPTION
24	AS-BUILT AS OF 06/17/2015, INCORP'D: FDC-10197, 10203, 10225, 10275, 10277, 10348, 10388, 10393, PRIOR HISTORY REMOVED, SEE DRF-345767

REVISION HISTORY

NO SCALE

DESIGN PHASE:
QUALITY LEVEL: SEE NOTE 18
HORIZONTAL SCALE: NONE
VERTICAL SCALE: NA
FOR DRAWING INDEX SEE DRAWING NO. 632756
SIGNATURES/DATES APPLY TO CURRENT RELEASE ONLY

	SIGN AND DATE
DESIGN: NA	– –
DRAFTER: J. MONCUR	
TECHNICAL CHECK: NA	– –
ENG GROUP SUPERVISOR: NA	– –
DESIGN LEAD/AUTHORITY: NA	– –
DRAFTING CHECK/ EFFECTIVE DATE: K. KELLER	

Idaho Cleanup Project
INTEC CPP-1696
INTEGRATED WASTE TREATMENT UNIT
PIPING & INSTRUMENT DIAGRAM
PROCESS EXHAUST MONITORING AND DISCHARGE

PROJECT NUMBER: 25051
INDEX CODE NUMBER: SYS 1 | DSC 1 | SEC 1 | SUBSEC 200 | 1696 | 24 | 136
SIZE E | DWG- 632799 | REV 24 F6
DRF NO. -- | SHEET P-50

File: 632799-24F6.dwg
Path: N:\Field Engineering\
ID: KEVAL
Dates: 07/29/17 – 10:18 AM
FCN (28) FDM Document
Group: Plan\632799\632799_24
Layout Name: 632799

8	7	6	5	4	3	2	1

SU-SRC-150
CANISTER FILL STATION 0 SUMP

JET-SRC-550
CANISTER FILL STATION 0 STEAM JET EJECTOR

DSS-SRC-690
PRODUCT HANDLING CELL 0 WASHDOWN SPRAY

SU-SRC-151
CANISTER FILL STATION 1 SUMP

JET-SRC-551
CANISTER FILL STATION 1 STEAM JET EJECTOR

SU-SRC-152
CANISTER FILL STATION 2 SUMP

DSS-SRC-691
PRODUCT HANDLING CELL 1 WASHDOWN SPRAY

SU-SRC-190
4 PACK SUMP

JET-SRC-590
4 PACK STEAM JET EJECTOR

DSS-SRC-641
4 PACK CELL WASHDOWN SPRAY

P-SRC-550-001
CANISTER FILL STATION 0 DIAPHRAGM PUMP

P-SRC-551-001
CANISTER FILL STATION 1 DIAPHRAGM PUMP

P-SRC-590-001
4 PACK DIAPHRAGM PUMP

DSS-SRC-690

NAV-SRC-690-3098
NAV-SRC-690-3076
NAV-SRC-690-3097
NAV-SRC-690-3075
NAV-SRC-690-3096
NAV-SRC-690-3074
NAV-SRC-690-3095
NAV-SRC-690-3073

09622 632825 1 1/2"-NA-SG-160600-N
DECON SOLUTION

WASHDOWN CELL 0
09705 632818 1 1/2"-HS-SM-160579-H
STEAM

04515 632792 1 1/2"-HW-SJ-161352-N
FROM DECON CANISTER CELL 0

HSV-SRC-550-879

1"-HS-SM-161351-H 09409 632792
STEAM TO DECON CANISTER CELL 0

HWV-SRC-550-880

633492 511

HSV-SRC-550-878

HV-SRC 550-001 HS-C 550-J

HWV-SRC-550-3015

JIT-SRC 150-001 L-C 150-J

SEE NOTE 9

NOTE 2 P 1A

1/2"-HI-SE-160545-N

CCTV

JET-SRC-550

1 1/2"X1"

NOTE 10

HV-SRC 550-001

NOTE 11

1 1/2"X1"

1 1/2"

NOTE 6

HWV-SRC-550-491

HWV-SRC-550-3000

1 1/2"-HW-SJ-160763-N 09407 632760
TO WASTE FEED TANK

1 1/2"-HW-SJ-160763-N

FLOOR SLOPE FOR DRAINAGE

P-SRC-550-001

HSV-SRC-550-001

1/2"-HI-SE-162618 788698
INSTRUMENT AIR

1"-HW-SJ-160763-N

STR-SRC-590-604

STR-SRC-590-609

CANISTER FILL 0

SU-SRC-150

DSS-SRC-691

NAV-SRC-691-3100
NAV-SRC-691-3080
NAV-SRC-691-3119
NAV-SRC-691-3079
NAV-SRC-691-3120
NAV-SRC-691-3078
NAV-SRC-691-3099
NAV-SRC-691-3077

09623 632825 1 1/2"-NA-SG-160601-N
DECON SOLUTION WASHDOWN CELL 1

09706 632818 1 1/2"-HS-SM-160615-H
STEAM

04516 632792 1 1/2"-HW-SJ-161355-N
FROM DECON CANISTER CELL 1

HSV-SRC-551-882

1"-HS-SM-161354-H 09410 632792
STEAM TO DECON CANISTER CELL 1

HWV-SRC-551-884

633492 514

1 1/2"-HW-SJ-161968-N
2"X1 1/2"
HWV-SRC-151-001
DRAIN FROM PIPE CHASE

JIT-SRC 151-001 L-C 151-J

SEE NOTE 9

NOTE 2 P 1A

1/2"-HI-SE-160571-N

CCTV

HSV-SRC-551-881

JET-SRC-551

1 1/2"X1"

HV-SRC 551-001 HS-C 551-J

NOTE 10

HWV-SRC-551-3017

HV-SRC 551-001

NOTE 11

1 1/2"X1"

1 1/2"

NOTE 6

HWV-SRC-551-488

HWV-SRC-551-3016

1 1/2"-HW-SJ-160764-N 09406 632760
TO WASTE FEED TANK

1 1/2"-HW-SJ-160764-N

04112 632790 1 1/2"-HW-SJ-160320-N
DRAIN FROM PRODUCT PUMP

04203 632791 1 1/2"-HW-SJ-161047-N
VACUUM FILTER DRAIN

1 1/2"-HW-SJ-161047-N

FLOOR SLOPE FOR DRAINAGE

P-SRC-551-001

HSV-SRC-551-001

1/2"-HI-SE-162619 768698
INSTRUMENT AIR

1"-HW-SJ-160764-N

STR-SRC-552-603

STR-SRC-552-610

CANISTER FILL 1

SU-SRC-151

CANISTER FILL 2

SU-SRC-152

DSS-SRC-641

NAV-SRC-641-3107
NAV-SRC-641-3086
NAV-SRC-641-3106
NAV-SRC-641-3085
NAV-SRC-641-3105
NAV-SRC-641-3084
NAV-SRC-641-3104
NAV-SRC-641-3083
NAV-SRC-641-3103
NAV-SRC-641-3082
NAV-SRC-641-3102
NAV-SRC-641-3081

DECON SOLUTION
NOTE 7
1 1/2"-NA-SG-160610-N
1"X1 1/2"
NAV-SRC-641-3018

DRAIN FROM PIPE CHASE
2"X1 1/2" FOB
1 1/2"-HW-SJ-161966-N

09711 632818 1 1/2"-HS-SM-160608-H
STEAM

1 1/2"-HW-SJ-161383-N
2"X1 1/2" FOB
DRAIN FROM PIPE CHASE

JIT-SRC 190-001 L-C 190-J

SEE NOTE 9

NOTE 2 P 1A

1/2"-HI-SG-160607-N

CCTV

JET-SRC-590

1 1/2"X1"

HV-SRC 590-001 HS-C 590-J

NOTE10

NOTE 11

1 1/2"X1"

NOTE 6

HWV-SRC-590-482

HWV-SRC-590-3019

1 1/2"-HW-SJ-160739-N 09408 632760
TO WASTE FEED TANK

1 1/2"-HW-SJ-160739-N

633494 620

01111 632760 4"-HW-SJ-160014-N
WASTE FEED TANK OVERFLOW

01213 632762 1 1/2"-HW-SJ-160332-N
DMR DRAIN

01304 632763 1 1/2"-HW-SJ-160261-N
PROCESS GAS FILTER DRAIN

01504 632765 1 1/2"-HW-SJ-160258-N
OFF GAS FILTER DRAIN

P-SRC-590-001

HSV-SRC-590-001

1/2"-HI-SE-162616 768741
INSTRUMENT AIR

1"-HW-SJ-160739-N

STR-SRC-550-601

STR-SRC-550-607

4 PACK

SU-SRC-190

NOTES

1. DELETED.
2. P 1A SEE TYPICAL INSTRUMENT PURGE ON DWG 632758.
3. DELETED.
4. DELETED.
5. DELETED.
6. VALVE ACTUATING SHAFT PENETRATES THE SHIELD WALL.
7. TEMPORARY CONNECTION TO 1 1/2"-NA-SG-160610-N IS MADE BY FLEXIBLE HOSE FROM NA-SG-160604 (P&ID 632825).
8. THE QUALITY LEVEL AND ASSOCIATED QUALITY LEVEL DETERMINATION FOR EQUIPMENT, INSTRUMENTS, AND COMPONENTS ON THIS DRAWING ARE IDENTIFIED ON THE "IWTU PROJECT EQUIPMENT LIST" AS MAINTAINED UNDER MCP-3350, DATA MANAGEMENT OF CONFIGURATION MANAGED FIELDS IN THE IWTU PROJECT EQUIPMENT LIST.
9. CELL PRESSURE LEVEL CORRECTION.
10. SEE TYPICAL VALVE POSITION SWITCH DETAIL ON DWG. 632758.
11. SPRING RETURN ACTUATOR SHALL BE INSTALLED SUCH THAT THE FAIL CONDITION ALIGNS THE BALL VALVE PORT TO THE DIAPHRAGM PUMP.

REVISION HISTORY

REV	DESCRIPTION
12	ACE-8421 AS OF 01/09/2017, INCORP'D TDC-10697, PRIOR HISTORY REMOVED
	SEE DRF-332948

Randy Eastman
Fluor Idaho
2017.02.09 13:07:07 -07'00'

PROFESSIONAL ENGINEER
RANDY EASTMAN
4307
STATE OF IDAHO

I CERTIFY THE CHANGES SHOWN ON THIS DRAWING REFLECT THE CURRENT CONSTRUCTED CONDITION AS OF 01/09/2017

Idaho Cleanup Project
Fluor Idaho
INTEC CPP-1696
INTEGRATED WASTE TREATMENT UNIT
PIPING & INSTRUMENT DIAGRAM
DRAINS AND SUMPS SHEET 1

SIGNATURES/DATES APPLY TO CURRENT RELEASE ONLY

	SIGN AND DATE
DESIGN: NA	-- --
DRAFTER: A. KEY	Angela L Key Primavera 2017.02.08 11:22:51 -07'00'
TECHNICAL CHECK: NA	-- --
IDN GROUP SUPERVISOR: NA	-- --
DESIGN LEAD/AUTHORITY: NA	-- --
DRAFTING CHECK/ DIRECTING DRG: K. KELLER	Kris Keller Primavera 2017.02.08 13:51:07 -07'00'

NO SCALE

DESIGN PHASE:

QUALITY LEVEL: SEE NOTE 8

HORIZONTAL SCALE: NONE

VERTICAL SCALE: NA

FOR DRAWING INDEX SEE DRAWING NO. 632756

PROJECT NUMBER: 25051

INDEX CODE NUMBER

SYS	TYPE	NO.	SEQ
200	1696	24	136

ENG DWG- 632821 REV 12

DRF NO. --

SHEET P-72

Date: 02/02/17 7:49 AM Layout Name: Layout1 ID: KEYAL

File: 632821-12.dwg Path: S:\ACE\DRAFT\

SU-SRB-196
MECHANICAL EQUIPMENT ROOM SUMP

TK-SRE-196
HEPA FIREWATER COLLECTION TANK

SU-SRB-197
ADDITIVES STORAGE ROOM SUMP

P-SRC-594-001
SAMPLE TRANSFER CELL DIAPHRAGM PUMP

JET-SRC-594
SAMPLE TRANSFER CELL STEAM JET EJECTOR

SU-SRH-198
TRUCK AIR LOCK SUMP

SU-SRC-194
SAMPLE CELL SUMP

SU-SRC-199
NORTH CASK LOADING SUMP

SU-SRC-195
SOUTH CASK LOADING SUMP

SU-SRC-180
2 PACK SUMP

P-SRC-580-001
2 PACK DIAPHRAGM PUMP

MECHANICAL EQUIPMENT ROOM FLOOR SLOPE
ADDITIVE STORAGE ROOM FLOOR SLOPE
TRUCK AIR LOCK FLOOR SLOPE (TRENCH DRAIN)
NORTH CASK LOADING FLOOR SLOPE
SOUTH CASK LOADING FLOOR SLOPE
NOTE 4
SU-SRB-196
SU-SRB-197
SU-SRH-198
SU-SRC-199
SU-SRC-195

JET-SRC-580
2 PACK CELL STEAM JET EJECTOR

05102 632798
DRAIN FROM MERCURY ADSORBERS
4"-SW-SA-160508-N
4"-SW-NS-160778-N
4"-VN-NS-160775-N
4"-VN-SA-161964-N
633453
OVERFLOW VENT TO BLDG HEPA FILTERS

05003 632797
PROCESS HEPA DRAINS
6"-SW-SA-161223-N
6"-SW-NS-160780-N

8"-SW-SA-161200-N
8"-SW-NS-160779-N

633453
F-SRH-131 HEPA PRE FILTER DRAIN
4"-SW-SA-161753-N
HY-SRH 131-003
HV-SRH 131-003

633453
F-SRH-131 HEPA STAGE 1 DRAIN
4"-SW-SA-161754-N
HY-SRH 131-004
HV-SRH 131-004

633453
F-SRH-132 HEPA PREFILTER DRAIN
4"-SW-SA-161755-N
HY-SRH 132-003
HV-SRH 132-003

633453
F-SRH-132 HEPA STAGE 1 DRAIN
4"-SW-SA-161756-N
HY-SRH 132-004
HV-SRH 132-004

NOTE 6 AND 8
NOTE 10
FIRE
IA
FC

MSH-E 196-1
MSH-E 196-6
MSH-E 196-2
MSH-SRE 196-006A
MSH-SRE 196-006B
MSH-SRE 196-002
LIT-SRE 196-001
TK-SRE-196
NOTE 3

09625 632825
DECON SOLUTION WASHDOWN SAMPLING CELL
1 1/2"-NA-SG-160603-N
NAV-SRC-644-649
NOTE 12
1 1/2"X1"
NAV-SRC-644-991
NAV-SRC-644-922

09708 632818
STEAM
1 1/2"-HS-SM-160625-H
SEE NOTE 14
633492 516
1 1/2"-HS-SG-160539-N
NOTE 2
JET-SRC-594
HY-SRC 594-001
HS-C 594-1
NOTE 6
HV-SRC 594-001
NOTE 15
HWV-SRC-594-499
HWV-SRC-594-3172
HWV-SRC-594-3173
1 1/2"-HW-SJ-161281-N
0990I 632760
TO WASTE FEED TANK
1 1/2"-HW-SJ-161281-N
P-SRC-594-001
HV-SRC-594-001
1/2"-HI-SE-162620-N
768743
INSTRUMENT AIR
(FLOOR SLOPE)
SAMPLE TRANSFER CELL
SAMPLE TRANSFER
1"-HW-SJ-161281-N
STR-SRC-580-606
STR-SRC-580-611
SU-SRC-194

09704 632818
STEAM
1 1/2"-HS-SM-160629-H
SEE NOTE 14
633494 610
1 1/2"-HS-SG-160630-N
NOTE 2
JET-SRC-580
HY-SRC 580-001
HS-C 580-1
NOTE 6
HV-SRC 580-001
NOTE 15
HWV-SRC-580-495
HWV-SRC-580-3174
NOTE 11
1 1/2"-HW-SJ-160998-N
0990I 632760
TO WASTE FEED TANK
1 1/2"-HW-SJ-160998-N
P-SRC-560-001
HV-SRC-580-001
1/2"-HI-SE-162617-N
768741
INSTRUMENT AIR
(FLOOR SLOPE)
CRR AREA CONTAINMENT
CCTV
1"-HW-SJ-160998-N
STR-SRC-594-605
STR-SRC-594-608
2 PACK
SU-SRC-180

01702 632766
OFF-GAS COOLER DRAIN
1 1/2"-HW-SJ-160695-N

PIPE CHASE DRAIN
CONNECT TO SOUTHWEST WALL DRAIN
2"X1 1/2"
1 1/2"-HW-SJ-161967-N
HWV-SRC-180-001

NOTES

1. DELETED.
2. SEE (P) 1A TYPICAL INSTRUMENT PURGE ON DWG. 632758 & 632802.
3. FLANGE TO ANNULAR TANK SECTION FOR PORTABLE PUMP CONNECTION.
4. SAMPLE AND ANALYSIS OF COLLECTED WASTEWATER IN SU-SRC-196, SU-SRC-197, SU-SRC-198 AND SU-SRC-199 IS REQUIRED PRIOR TO DISPOSAL.
5. DELETED.
6. SEE TYPICAL VALVE POSITION SWITCH DETAIL ON DWG. 632758.
7. DELETED.
8. AIR-TIGHT SHUT-OFF VALVE NEEDED FOR BUILDING HEPA DRAIN LINES TO ENSURE NO OFF-GAS DISCHARGE THROUGH LINE. THIS VALVE IS CONNECTED TO THE FIRE PROTECTION SYSTEM.
9. DELETED.
10. REFERENCE FIRE PROTECTION DRAWING 634381, FIRE ALARM SYSTEM SINGLE LINE DIAGRAM.
11. VALVE ACTUATING SHAFT PENETRATES THE SHIELD WALL.
12. FOR FLEXIBLE HOSE CONNECTION TO 1/2"-NA-SG-160318-N (P&ID 632793).
13. THE QUALITY LEVEL AND ASSOCIATED QUALITY LEVEL DETERMINATION FOR EQUIPMENT, INSTRUMENTS AND COMPONENTS ON THIS DRAWING ARE IDENTIFIED ON THE "IWTU PROJECT EQUIPMENT LIST" AS MAINTAINED UNDER MCP-3350, DATA MANAGEMENT OF CONFIGURATION MANAGED FIELDS IN THE IWTU PROJECT EQUIPMENT LIST.
14. CELL PRESSURE LEVEL CORRECTION.
15. SPRING RETURN ACTUATOR SHALL BE INSTALLED SUCH THAT THE FAIL CONDITION ALIGNS THE BALL VALVE PORT TO THE DIAPHRAGM PUMP.

REVISION HISTORY

REV	DESCRIPTION
13	ACE-8661 AS OF 11/09/2017, INCORP'S FDN-13007, PRIOR HISTORY REMOVED. SEE DIR-352448

Randy Eastman
Fluor Idaho
2017.02.08 13:23:05 -07'00'
PROFESSIONAL ENGINEER REGISTERED 4307 STATE OF IDAHO RANDY EASTMAN

I CERTIFY THE CHANGES SHOWN ON THIS DRAWING REFLECT THE CURRENT CONSTRUCTED CONDITION AS OF 01/09/2017

Idaho Cleanup Project
Fluor DOE
INTEC CPP-1696
INTEGRATED WASTE TREATMENT UNIT
PIPING & INSTRUMENT DIAGRAM
DRAINS AND SUMPS SHEET 2

SIGNATURES/DATES APPLY TO CURRENT RELEASE ONLY

	SIGN AND DATE
DESIGN: NA	-- --
DRAFTER: A. KEY	Angela L Key Portage 2017.02.08 11:23:05 -07'00'
TECHNICAL CHECK: NA	-- --
ENG GROUP SUPERVISOR: NA	-- --
DESIGN LEAD/AUTHORITY: NA	-- --
DRAFTING CHECK/ EFFECTIVE DATE: K. KELLER	Kirk Keller Fluor Idaho 2017.02.08 13:30:30 -07'00'

NO SCALE

DESIGN PHASE:	
QUALITY LEVEL:	SEE NOTE 13
HORIZONTAL SCALE	NONE
VERTICAL SCALE	NA
FOR DRAWING INDEX SEE DRAWING NO.	632756
PROJECT NUMBER:	25051

PACE CODE NUMBER			
AREA	TYPE	FA	CHRON
200	1696	24	136

SIZE E DWG- 632822 REV 13
DRF NO. - SHEET P-73

Date: 02/02/17 4:53 PM Layout Name: Layout1
ID: KEYAL
File: 632822-r13.dwg
Path: S:\IWTU\DWG\632822-r13.dwg

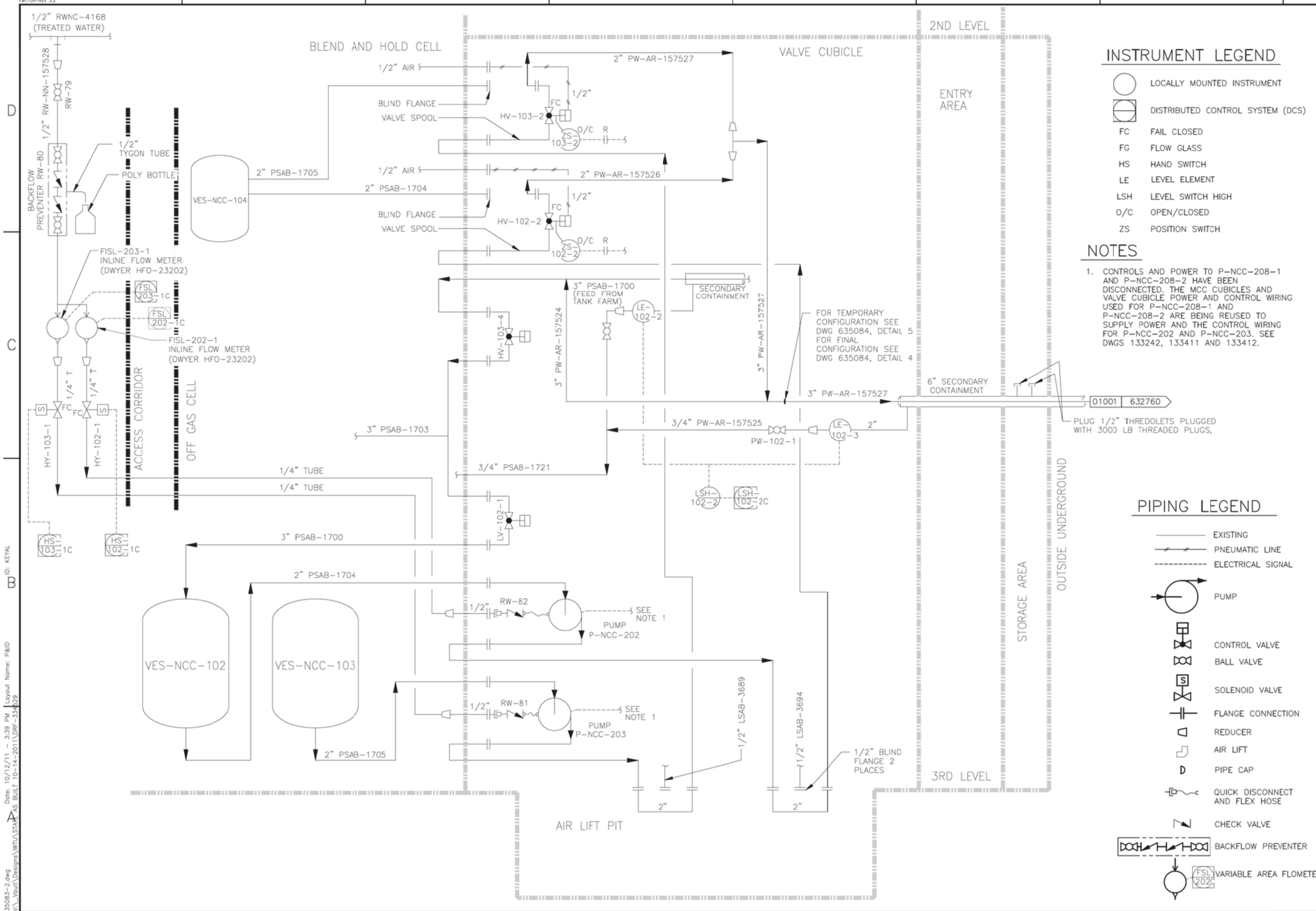

INSTRUMENT LEGEND

- LOCALLY MOUNTED INSTRUMENT
- DISTRIBUTED CONTROL SYSTEM (DCS)
- FC FAIL CLOSED
- FG FLOW GLASS
- HS HAND SWITCH
- LE LEVEL ELEMENT
- LSH LEVEL SWITCH HIGH
- O/C OPEN/CLOSED
- ZS POSITION SWITCH

NOTES

1. CONTROLS AND POWER TO P-NCC-208-1 AND P-NCC-208-2 HAVE BEEN DISCONNECTED. THE MCC CUBICLES AND VALVE CUBICLE POWER AND CONTROL WIRING USED FOR P-NCC-208-1 AND P-NCC-208-2 ARE BEING REUSED TO SUPPLY POWER AND THE CONTROL WIRING FOR P-NCC-202 AND P-NCC-203. SEE DWGS 133242, 133411 AND 133412.

PIPING LEGEND

- EXISTING
- PNEUMATIC LINE
- ELECTRICAL SIGNAL
- PUMP
- CONTROL VALVE
- BALL VALVE
- SOLENOID VALVE
- FLANGE CONNECTION
- REDUCER
- AIR LIFT
- PIPE CAP
- QUICK DISCONNECT AND FLEX HOSE
- CHECK VALVE
- BACKFLOW PREVENTER
- FSL 202C VARIABLE AREA FLOMETER

REV	DESCRIPTION
2	AS BUILT AS OF 10/5/11, INCORP'D FDC 4572, 7144, 7639, 7693, SEE DRF-334529
1	SEE DRF-316691

REVISION HISTORY

NO SCALE

DESIGN PHASE:	
QUALITY LEVEL:	3
HORIZONTAL SCALE:	NONE
VERTICAL SCALE:	NA

FOR DRAWING INDEX SEE DRAWING NO: 635080

SIGNATURES/DATES APPLY TO CURRENT RELEASE ONLY	SIGN AND DATE
DESIGN: NA	– –
DRAFTER: A. KEY	Angela Key CWI 2011.10.12 15:46:23 -06'00'
TECHNICAL CHECK: NA	– –
ENG GROUP SUPERVISOR: NA	– –
DESIGN LEAD: NA	– –
DRAFTING CHECK/ EFFECTIVE DATE: G. MACE	Gene Mace CWI 2011.10.12 15:19:45 -06'00'

Idaho Cleanup Project — CH2M WG IDAHO, LLC

INTEC
IWTU MODIFICATIONS
TO NWCF VALVE CUBICLE
P & ID

PROJECT NUMBER: 25051

INDEX CODE NUMBER			
AREA	TYPE	CI	ORD
200	0659	24	136

SIZE D — DWG-635083 — REV 2

ORF NO. 126630 — SHEET P-3

FMT-DV-REV 3.2

File: 635083-2.dwg
Path: V:_Vault\Designs\IWTU\STAGE AS BUILT 10-14-2011\ORF-334529
Date: 10/12/11 - 3:39 PM Layout Name: P&ID
ID: KEYAL

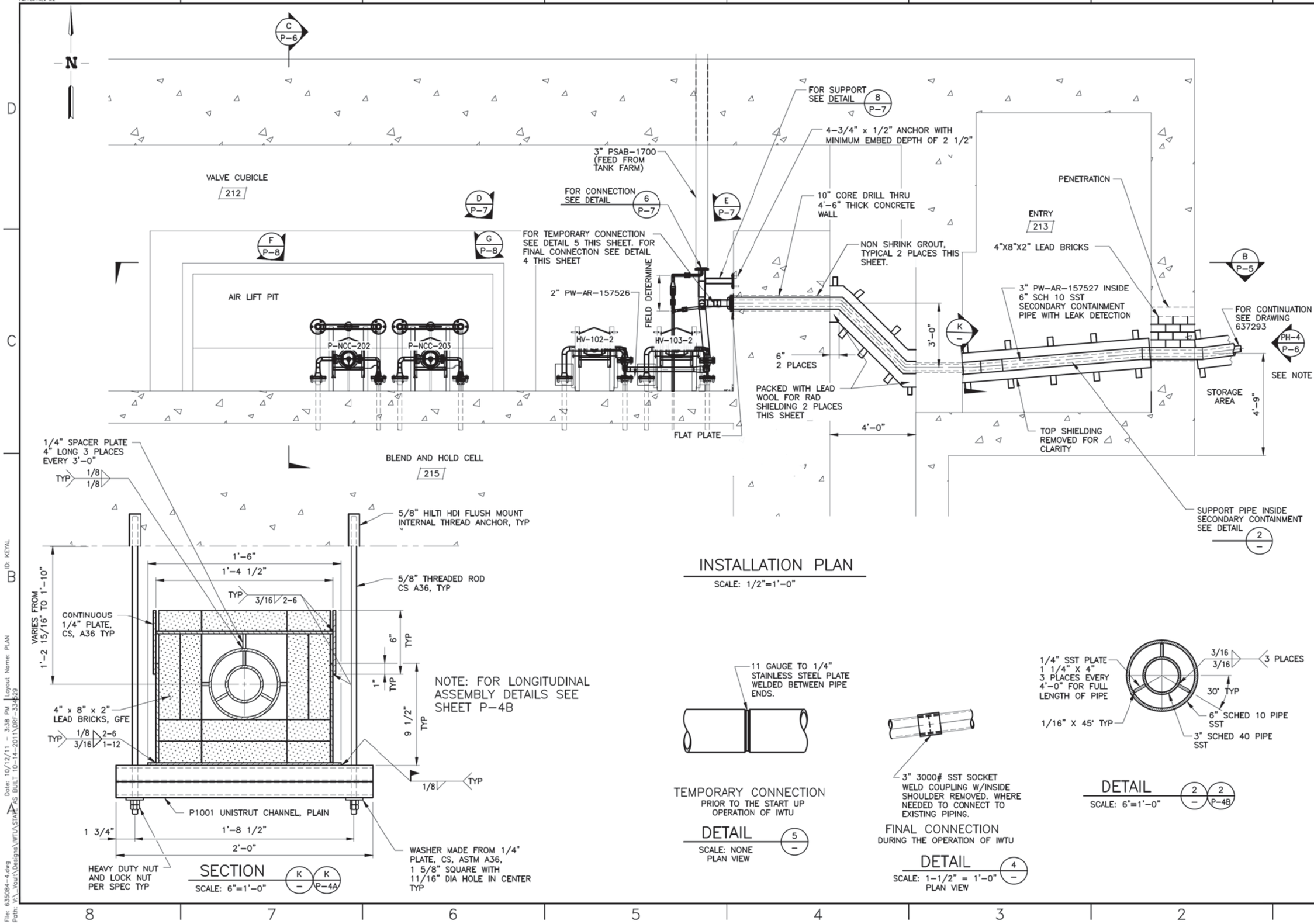

REV	DESCRIPTION
4	AS BUILT AS OF 10/5/11, PRIOR HISTORY REMOVED, INCORP'D FCN 4542, 4900, 5063, 5239, 6986, 7560, 7662, 7705, 7820, SEE DRF-334529

REVISION HISTORY

SCALE: 1/2" = 1'-0"

DESIGN PHASE:
QUALITY LEVEL: 3
HORIZONTAL SCALE: 1/2" = 1'-0"
VERTICAL SCALE: NA
FOR DRAWING INDEX SEE DRAWING NO: 635080
SIGNATURES/DATES APPLY TO CURRENT RELEASE ONLY — SIGN AND DATE
DESIGN: NA
DRAFTER: A. KEY — Angela Key CWI 2011.10.12 15:38:00 -06'00'
TECHNICAL CHECK: NA
ENG GROUP SUPERVISOR: NA
DESIGN LEAD: NA
DRAFTING CHECK/EFFECTIVE DATE: G. MACE — Gaina Mace CWI 2011.10.12 15:52:09 -06'00'

Idaho Cleanup Project — CH2M+WG IDAHO, LLC

INTEC
IWTU NWCF VALVE CUBICLE TO NACF VALVE CUBICLE

INSTALLATION PLAN

PROJECT NUMBER: 25051

INDEX CODE NUMBER			
AREA	TYPE	CL	ORIG
200	0659	51	136

SIZE D — DWG-635084 — REV 4
DRF NO. 126630 — SHEET P-4

FMT-DV-REV 3.2
File: 635084-4.dwg Path: V:_Vault\Designs\IWTU\STATE AS BUILT 10-14-2011\DRF-334529 Date: 10/12/11 - 3:38 PM Layout Name: PLAN ID: KEYAL

FMT-DV-REV 3.2

CPP-659

1"HAN-106233
2"HSN-106249

CATH PROT

ELEC DB

ELEC DB

1"HAN-111072
2"HSN-111004
3"TAA-106238
3"TAA-106248
3"TAA-106236
1 1/2"HSA-106251
ENCASED IN CONC

3"TAA-111003
3"TAA-111001
3"TAA-111002
1 1/2"HSA-111006
ENCASED IN CONC

STA 11+64.6
N695,465.33'
E297561.26

INSIDE 3" PW-AR-157527 SECONDARY CONTAINMENT

NEGATIVE CABLE

2 1/4"-TA-AR-157548 (PTS)
SEE SH C-5

B
C-9

COMM DB
SEE SH C-6

TELEPHONE CABLE

ELECTRICAL DUCT BANK

ELECTRICAL DUCT BANK

HEMLOCK STREET

8"FWN-104416
CATH PROT

ITEM NOT SHOWN IS A TEMPORARY POWER DUCTBANK AT STA 12+93.9. DUCTBANK IS 10 1/2" SQ AND IS 30" BELOW GRADE

STA 10+02

7.2"

STA 10+00.0
N695,465.08'
E297392.00

CONTINUED ON DWG 637293

INTEC

IWTU

N695252.92
E297726.32

IWTU

12" FW LINE

PROVIDE TEMP CAP OR EXPANDING PLUG ON 3" AND 6" LINE

SEE SH C-2 AND C-3

NORTH TO SOUTH:
3" CW-NN-109852
3" TW-NN-109826
4" HA-NN-101637
6" HS-NN-101623
3" CT-NN-154680

3/8"

STA 15+54.7
N695163.60
E297798.10
END OF PIPE, TP-1

DATUM: HORIZONTAL: INTEC SITE SPECIFIC
VERTICAL: INTEC SITE SPECIFIC

PLAN

1/16" X 45° TYP

1/4" SST PLATE
1 3/8" X 4"
3 PLACES EVERY
4'-0" FOR FULL
LENGTH OF PIPE

3/16
3/16
3 PLACES

6" SCHED 10 PIPE SST

3" SCHED 40 PIPE SST

30° TYP

DETAIL

SCALE: FULL

8 / –

10+00 11+00 11+64.6 12+00 15+00 15+54.7

4914 4912 4910 4908 4906 4904 4902 4900 4898 4896

CPP-659

PLANT MIX

NATURAL GRAVEL

GRADE

NEGATIVE CABLE

TELEPHONE CABLE

ELECTRICAL DUCT BANK

ELECTRICAL DUCT BANK

1"HAN-106233
2"HSN-106249
8"FWN-104416
CATH PROT

CATH PROT

ELECTRICAL DUCT BANK

ELECTRICAL DUCT BANK

1"HAN-111072
2"HSN-111004

2 1/4"-TA-AR-157548 (PTS)

SUPPORT PIPE INSIDE SECONDARY CONTAINMENT SEE DETAIL 8 / –

BOT OF PIPE EL 4901.0'

ENCASED IN CONC
3"TAA-106238
3"TAA-106248
3"TAA-106236
1 1/2"HSA-106251

CONTINUED DWG 637293 IN DWG PACKAGE "IWTU MODIFICATIONS TO NWCF VALVE CUBICLE"

BOT OF PIPE EL 4897.46' AT STA 10+02

3" PW-AR-157527
BOT OF PIPE EL 4897.44'

6" SECONDARY CONTAINMENT PIPE

REMOVED ENCASEMENT CONCRETE AS REQUIRED FOR INSTALLATION OF 6" SECONDARY CONTAINMENT PIPE AND 4" MIN SAND BEDDING PER SPEC

3"TAA-111003
3"TAA-111001
3"TAA-111002
1 1/2"HSA-111006
ENCASED IN CONC

ITEM NOT SHOWN IS A TEMPORARY POWER DUCTBANK AT STA 12+93.9. DUCTBANK IS 10 1/2" SQ AND IS 30" BELOW GRADE

PLANT MIX

NATURAL GRAVEL

3" CW-NN-109852
3" TW-NN-109826
4" HA-NN-101637
6" HS-NN-101623
3" CT-NN-154680

TEMPORARY CAP OR EXPANDING PLUG ON 3" AND 6" LINES

3" PW-AR-157527
BOT OF PIPE EL 4909.5'

12" FW LINE

BOT OF PIPE EL 4904.4"

REV	DESCRIPTION
5	AS BUILT AS OF 10-5-11, PRIOR
	HISTORY REMOVED, SEE DRF-334540

REVISION HISTORY

SCALE: FULL

SCALE: 1" = 20.0'

DESIGN PHASE:	
QUALITY LEVEL:	3
HORIZONTAL SCALE	1"=20.0'
VERTICAL SCALE	1"=2.0'

FOR DRAWING INDEX SEE DRAWING NO. 637281

SIGNATURES/DATES APPLY TO CURRENT RELEASE ONLY

	SIGN AND DATE
DESIGN: NA	– –
DRAFTER: A. KEY	Angela Key CWI 2011.10.12 15:20:19 -06'00'
TECHNICAL CHECK: NA	– –
ENG GROUP SUPERVISOR: NA	– –
DESIGN LEAD: NA	– –
DRAFTING CHECK/ EFFECTIVE DATE: K. KELLER	Kris Keller CWI 2011.10.12 15:32:12 -06'00'

Idaho Cleanup Project

INTEC IWTU INFRASTRUCTURE PIPING TIE-INS

PROCESS LINE PLAN AND PROFILE

PROJECT NUMBER: 25051

INDEX CODE NUMBER			
AREA	TYPE	CL	ORIG
200	0200	51	136

SIZE D | DWG- 637285 | REV 5

DRF NO. 314645 | SHEET C-4

ID: KEYAL
Layout Name: PROCESS
Date: 10/12/11 – 9:47 AM
AS BUILT 10-14-2011\DRF-334540
File: 637285-5.dwg
Path: V:_Vault\Designs\IWTU\STAT

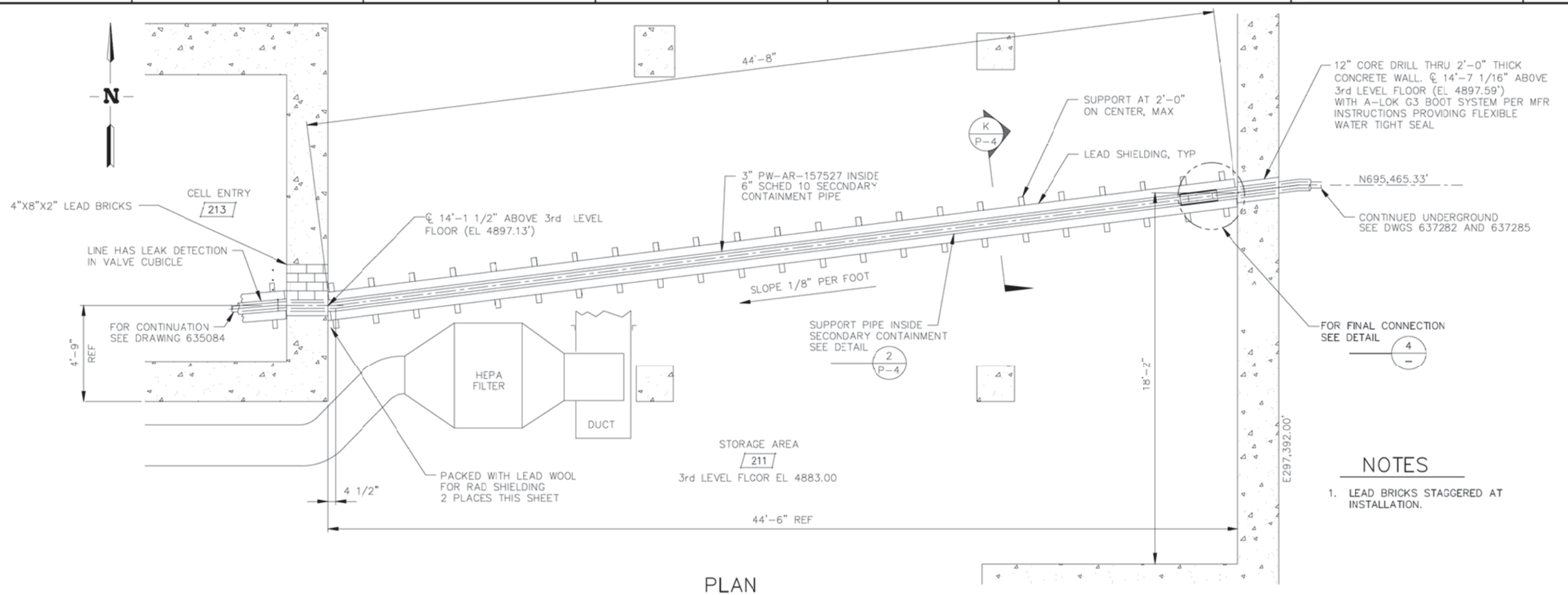

PLAN

SCALE: 3/8"=1'-0"

NOTES

1. LEAD BRICKS STAGGERED AT INSTALLATION.

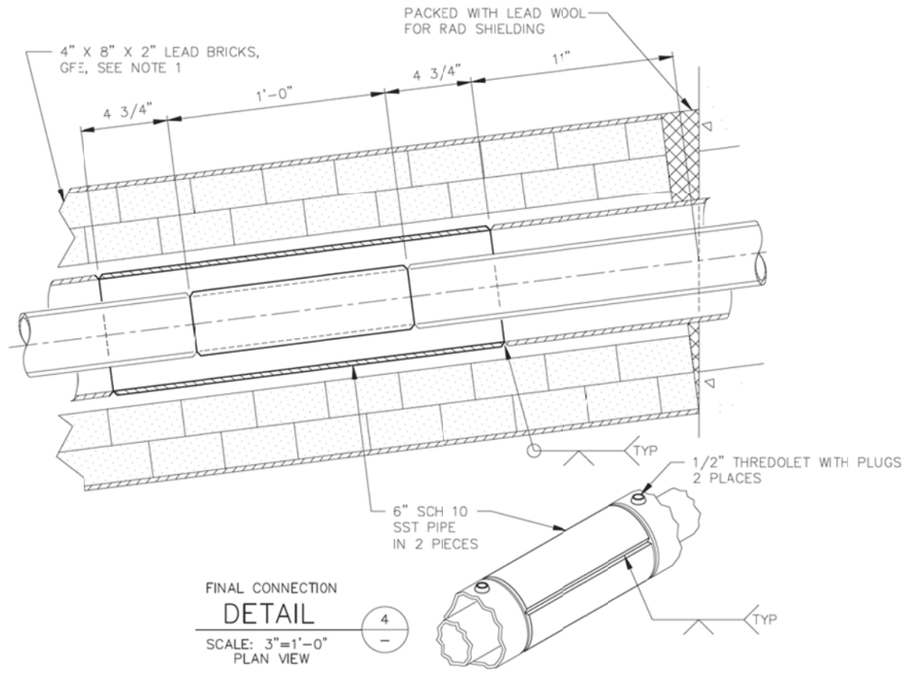

FINAL CONNECTION DETAIL 4 —

SCALE: 3"=1'-0"
PLAN VIEW

REV	DESCRIPTION
4	AS BUILT AS OF 10/5/11, PRIOR
	HISTORY REMOVED, INCORP'D FDC 6986
	SEE DRF-334529

REVISION HISTORY

SCALE: 3/8" = 1'-0"

SCALE: FULL

DESIGN PHASE:	
QUALITY LEVEL:	3
HORIZONTAL SCALE	NOTED
VERTICAL SCALE	NA
FOR DRAWING INDEX SEE DRAWING NO.	635080

SIGNATURES/DATES APPLY TO CURRENT RELEASE ONLY

	SIGN AND DATE
DESIGN: NA	– –
DRAFTER: A. KEY	Angela Key CWI 2011.10.12 15:42:01 -06'00'
TECHNICAL CHECK: NA	– –
ENG GROUP SUPERVISOR: NA	– –
DESIGN LEAD: NA	– –
DRAFTING CHECK/ EFFECTIVE DATE: G. MACE	Gene Maze CWI 2011.10.12 15:52:37 -06'00'

CH2M HILL B&W IDAHO, LLC

Idaho Cleanup Project

INTEC
IWTU MODIFICATIONS
TO NCWF VALVE CUBICLE

INSTALLATION PLAN, SHEET 2

PROJECT NUMBER: 25051

INDEX CODE NUMBER			
AREA	TYPE	SI	DRSC
200	0659	51	136

SIZE D DWG- 637293 REV 4

DRF NO. 314645 SHEET P-4A

Path: V:_Vault\Designs\IWTU\STAT\AS BUILT 10-14-2011\DRF-334529

INV: FMT-01-REV 5.2

NOTES:

1. FABRICATION WILL REQUIRE VERIFICATION OF FIELD DIMENSIONS AND ELEVATIONS. FIELD FABRICATION, MEASUREMENTS AND FINAL FIELD ADJUSTMENT OF PIPING/EQUIPMENT WILL BE REQUIRED. DURING FIELD FIT-UP, ENSURE THAT THE RAIL END IS INSERTED FULLY INTO THE PRC RECEIVER CUP, WITHDRAWN 1" AND TACK WELDED TO ESTABLISH THE DISTANCE FROM FLANGE FACE TO END OF RAIL.
2. REMOVE ALL BURRS AND SHARP EDGES.
3. ALL MACHINED FILLET RADII .03 MAXIMUM UNLESS OTHERWISE NOTED. TOLERANCES ARE +/- 1/8 UNLESS OTHERWISE NOTED.
4. ENGINEERING TO VERIFY THE INTERNAL SURFACES OF THE PIPE SPOOLS / ASSEMBLIES ARE FREE FROM PARTICULATE OR DEBRIS UPON COMPLETION OF FABRICATION. PIPE OPENING SHALL BE TEMPORARILY SEALED AND PROTECTED FROM DEBRIS UNTIL THE FINAL CLOSURE WELD IS COMPLETED.
5. ALL WELDING SHALL BE PERFORMED IN ACCORDANCE WITH INL WELDING PROCEDURE SPECIFICATION NO. S2.0 USING WELD FILLER MATERIAL AS INDICATED ON THE WELD PROCEDURE.
6. AS BEST PRACTICE, PERFORM VISUAL WELD EXAMINATION IN ACCORDANCE WITH TPR-4981, VISUAL EXAMINATION APPENDIX A FOR NORMAL FLUID SERVICE USING THE APPROPRIATE CRITERIA IN TABLE A-1.
7. ASSEMBLY AND BOLTING:
   - A. INSTALL FLEXITALLIC GASKET, 5" NOMINAL PIPE SIZE, 300 LB CLASS, FLEXPRO STYLE ZG, STAINLESS STEEL WITH FLEXICARB FILL.
   - B. APPLY BOSTIK NEVER-SEEZ PURE NICKEL SPECIAL, NUCLEAR GRADE THREAD LUBRICANT TO BOLT THREADS AND THE BEARING AREA UNDER THE HEAD OF THE BOLT.
     - I. FINAL TORQUE VALUE = 130 FT-LBS. UTILIZING A CALIBRATED TORQUE WRENCH, TIGHTEN THE STUDS/NUTS IN A 4-STAGE METHOD:
       - A. TIGHTEN THE STUDS/NUTS AT 30% (39 FT-LBS) OF THE FINAL TORQUE VALUE USING THE DIAMETRICAL SEQUENCE.
       - B. 60% OF FINAL TORQUE VALUE FOLLOWING THE DIAMETRICAL SEQUENCE.
       - C. 100% OF FINAL TORQUE VALUE FOLLOWING THE DIAMETRICAL SEQUENCE.
       - D. 100% OF FINAL TORQUE VALUE ON ADJACENT STUDS/NUTS.
8. QUALITY LEVEL QL-3 IN ACCORDANCE WITH QLD ID 5554.
9. ITEM 10 IS NOT SHOWN ON THIS DRAWING, BUT WILL BE USED AT ASSEMBLY.

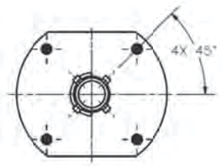

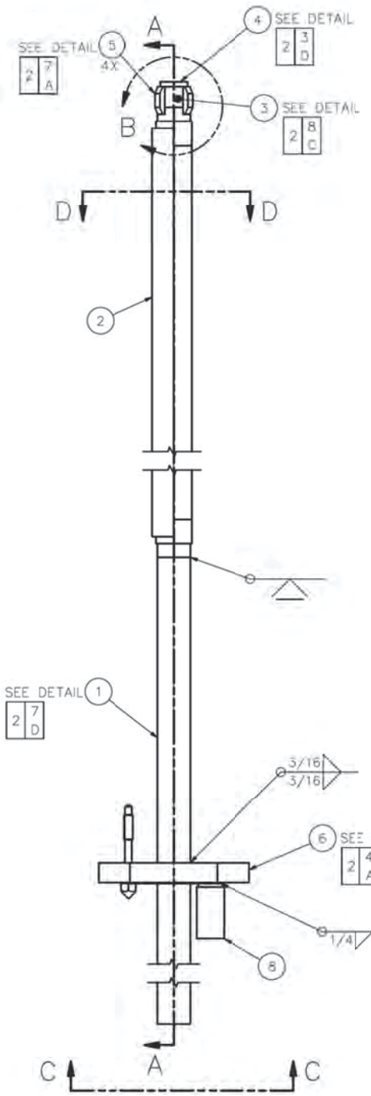

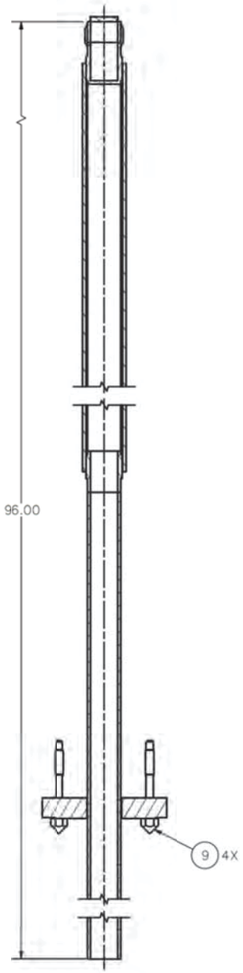

SECTION A-A
SCALE: 3/16

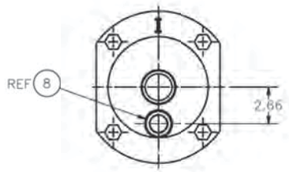

VIEW C
SCALE: 3/16

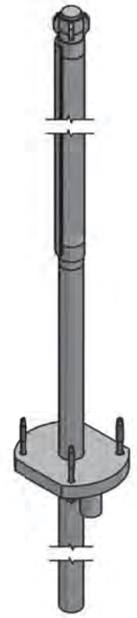

3D VIEW
(SHOWN FOR CLARITY)
SCALE: NONE

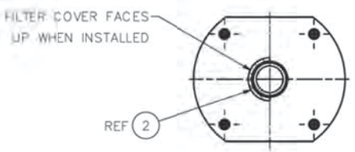

SECTION D-D
SCALE: 3/16

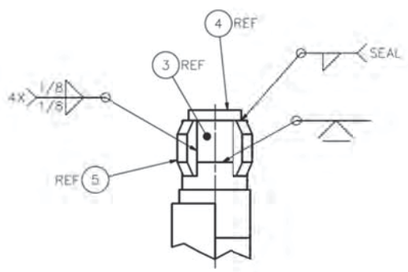

VIEW B
SCALE: 3/8

-0 ASSEMBLY
SCALE: 3/16
REMOVED 2X ITEM 9, FOR CLARITY

REVISIONS		
REV	DESCRIPTION	
—		

QTY REQD	QUAL LEVEL	PART OR IDENTIFYING NO.	NOMENCLATURE OR DESCRIPTION	MATERIAL/SPECIFICATION OR VENDOR NAME	ITEM NO.
1	3		GASKET, 5" NOMINAL PIPE SIZE	FLEXITALLIC 300 LB CLASS FLEXPRO STYLE ZG SST WITH FLEXCARB FILL	10
4	3	633202-30	BOLT		9
1	3	633202-23	REMOTE TOOL RECEIVER		8
AR	3		WELD FILLER	316/316L SST ASTM A240/A479	7
1	3	-6	RETAINER	PLATE OR BAR 316/316L SST ASTM A240/A479	6
4	3	-5	GUIDE	PLATE OR BAR 316/316L SST ASTM A240/A479	5
1	3	-4	END CAP	PLATE OR BAR 316/316L SST ASTM A240/A479	4
1	3	-3	PIPE, END	PIPE 316/316L SST ASTM A312	3
1	3		FILTER ELEMENT	PORVAIR SINTERED METAL GRADE 526, 316L SST	2
1	3	-1	PIPE	PIPE 316/316L SST ASTM A312	1
	3	-0	ASSEMBLY		0

PARTS LIST

INSPECTION REQUIREMENTS	-0	FINAL
QC REQUIRED	DASH NO.	NEXT ASSY
Q DENOTES Q/C INSP. REQD.	APPLICATION	

DIMENSIONING AND SYMBOLOGY PER ASME Y14.5-2009 AND STD-11
UNLESS OTHERWISE SPECIFIED
SURFACE ROUGHNESS 125
DIMENSIONS AND TOLERANCES ARE IN INCHES
TOLERANCES .X ±.1
DECIMALS .XX ±.03
.XXX ±.010
FRACTIONS ±1/8
ANGULAR ±2°
DO NOT SCALE DRAWING

SIGNATURES/DATES APPLY TO CURRENT RELEASE ONLY	SIGN AND DATE
DESIGN: M.SLOVAK	Mark E. Slovak Huljet Associate, LLC 2013.07.18 14:54:53 -06'00'
DRAFTER: M.PENNINGTON	Matt Pennington CWI 2013.07.18 13:28:44 -06'00'
TECHNICAL CHECK: D.KELLER PE	David E. Keller 2013.07.18 13:52:31 -06'00'
ENG GROUP SUPERVISOR: R.EASTMAN PE	Randy Eastman CWI 2013.07.18 13:47:12 -06'00'
DESIGN LEAD: B.REED PE	William H. Reed CWI 2013.07.18 14:57:57 -06'00'
DRAFTING CHECK/ EFFECTIVE DATE: S.BERTHELSON	Jim Moncur CWI 2013.07.18 15:04:49 -06'00'
PROJECT NUMBER: 25038	
DRF NUMBER: 339605	

Idaho Cleanup Project — CH2M•WG IDAHO, LLC

IWTU
CANISTER FILLING & DECON CELL
PRODUCT RECEIVER
COOLER INNER RAIL ASSEMBLY

SIZE	INDEX CODE NUMBER: AREA	TYPE	SEQ	ORG	DWG-	REV
D	200	1696	47	1.36	781895	
SCALE: NOTED					FS	SHEET 1 OF 2

File: 781895.dwg
Path: V:\Vault\Designs\IWTU\Coolers\CAN_END_CELL_NOZZLES
Layout Name: 781895.dgn
ID: pennm

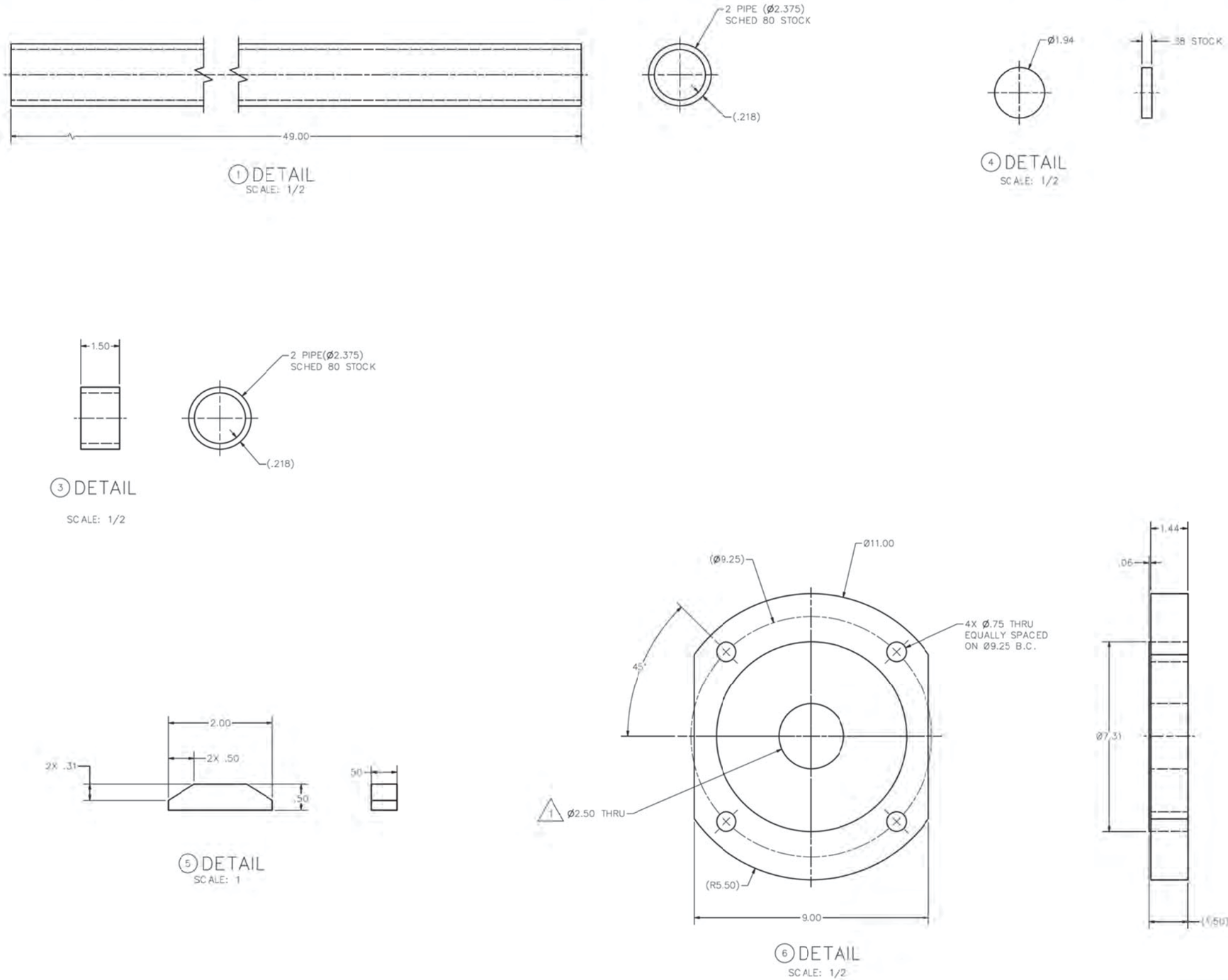

SIZE	INDEX CODE NUMBER				DWG-	781895	REV
	AREA	TYPE	CL	ORIG			
D	200	1696	47	136			
SCALE: NOTED					FS	SHEET 2	

File: 781895.dwg
Path: V:_Vault\Designs\WTD\COOLER NOZZLES - CAN F&D CEL\781895.dwg
Layout Name:

INV: FMT-D1-REV 5.2

NOTES:

1. FABRICATION WILL REQUIRE VERIFICATION OF FIELD DIMENSIONS AND ELEVATIONS. FIELD FABRICATION, MEASUREMENTS AND FINAL FIELD ADJUSTMENT OF PIPING/EQUIPMENT WILL BE REQUIRED. DURING FIELD FIT-UP, ENSURE THAT THE RAIL END IS INSERTED FULLY INTO THE PRC RECEIVER CUP, WITHDRAWN 1" AND TACK WELDED TO ESTABLISH THE DISTANCE FROM FLANGE FACE TO END OF RAIL.
2. REMOVE ALL BURRS AND SHARP EDGES.
3. ALL MACHINED FILLET RADII .03 MAXIMUM UNLESS OTHERWISE NOTED. TOLERANCES ARE +/- 1/8 UNLESS OTHERWISE NOTED.
4. ENGINEERING TO VERIFY THE INTERNAL SURFACES OF THE PIPE SPOOLS / ASSEMBLIES ARE FREE FROM PARTICULATE OR DEBRIS UPON COMPLETION OF FABRICATION. PIPE OPENING SHALL BE TEMPORARILY SEALED AND PROTECTED FROM DEBRIS UNTIL THE FINAL CLOSURE WELD IS COMPLETED.
5. ALL WELDING SHALL BE PERFORMED IN ACCORDANCE WITH INL WELDING PROCEDURE SPECIFICATION NO. 52.0 USING WELD FILLER MATERIAL AS INDICATED ON THE WELD PROCEDURE.
6. (Q) AS BEST PRACTICE, PERFORM VISUAL WELD EXAMINATION IN ACCORDANCE WITH TPR-4981, VISUAL EXAMINATION APPENDIX A FOR NORMAL FLUID SERVICE USING THE APPROPRIATE CRITERIA IN TABLE A-1.
7. ASSEMBLY AND BOLTING:
   - A. INSTALL FLEXITALLIC GASKET, 5" NOMINAL PIPE SIZE, 300 LB CLASS, FLEXPRO STYLE ZG, STAINLESS STEEL WITH FLEXICARB FILL.
   - B. APPLY BOSTIK NEVER-SEEZ PURE NICKEL SPECIAL, NUCLEAR GRADE THREAD LUBRICANT TO BOLT THREADS AND THE BEARING AREA UNDER THE HEAD OF THE BOLT.
   - I. FINAL TORQUE VALUE = 130 FT-LBS. UTILIZING A CALIBRATED TORQUE WRENCH, TIGHTEN THE STUDS/NUTS IN A 4-STAGE METHOD:
     - A. TIGHTEN THE STUDS/NUTS AT 30% (39 FT-LBS) OF THE FINAL TORQUE VALUE USING THE DIAMETRICAL SEQUENCE,
     - B. 60% OF FINAL TORQUE VALUE FOLLOWING THE DIAMETRICAL SEQUENCE,
     - C. 100% OF FINAL TORQUE VALUE FOLLOWING THE DIAMETRICAL SEQUENCE,
     - D. 100% OF FINAL TORQUE VALUE ON ADJACENT STUDS/NUTS.
8. QUALITY LEVEL QL-3 IN ACCORDANCE WITH QLD ID 5554.
9. ITEM 11 IS NOT SHOWN ON THIS DRAWING, BLT WILL BE USED AT ASSEMBLY.

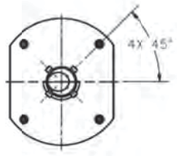

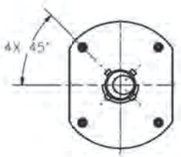

SECTION D-D
SCALE: 5/32

SECTION E-E
SCALE: 5/32

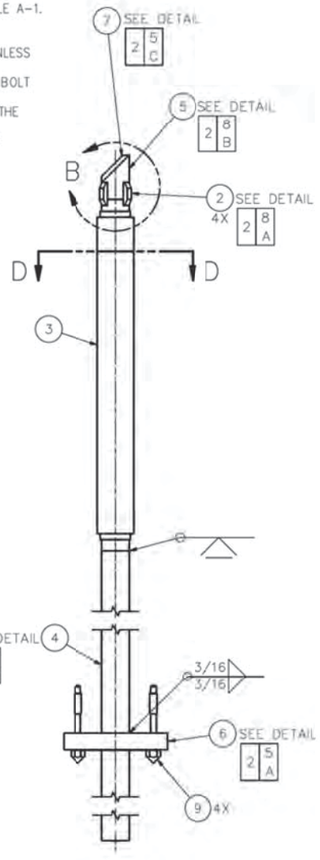

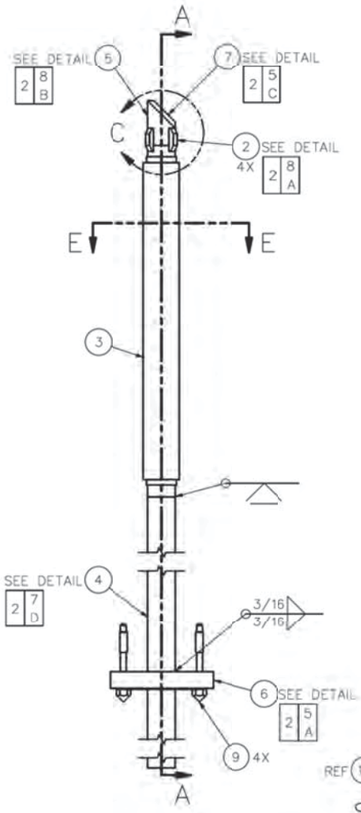

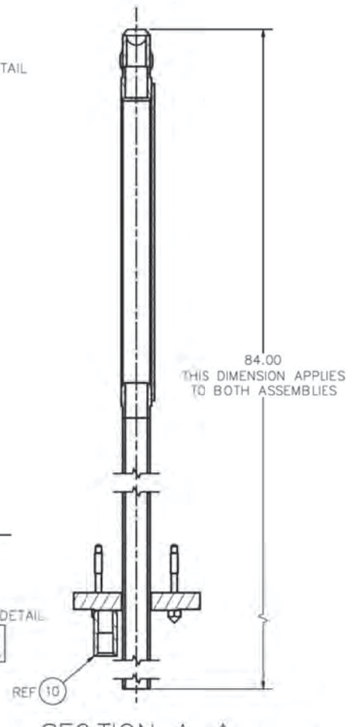

SECTION A-A
SCALE: 5/32

3D VIEW
(SHOWN FOR CLARITY)
SCALE: NONE

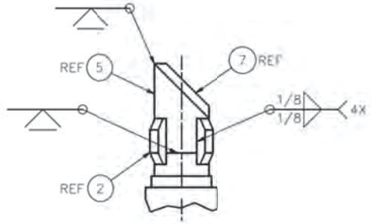

VIEW C
SCALE: 5/16

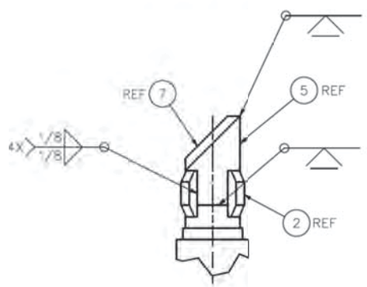

VIEW B
SCALE: 5/16

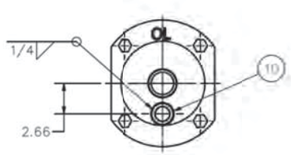

– 1 ASSEMBLY
SCALE: 5/32

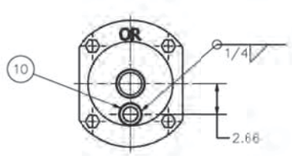

–0 ASSEMBLY
SCALE: 5/32

REVISIONS	
REV.	DESCRIPTION

QTY REQD –1	QTY REQD –0	QUAL LEVEL	PART OR IDENTIFYING NO.	NOMENCLATURE OR DESCRIPTION	MATERIAL/SPECIFICATION OR VENDOR NAME	ITEM NO.
1	1	3		GASKET, 5" NOMINAL PIPE	FLEXITALLIC 300 LB CLASS FLEXPRO STYLE ZG SST WITH FLEXICARB FILL	11
1	1	3	633202-23	REMOTE TOOL RECEIVER		10
4	4	3	633202-30	BOLT		9
AR	AR	3		WELD FILLER	316/316L SST ASTM A240/A479	8
1	1	3	-7	END CAP	PLATE OR BAR 316/316L SST ASTM A240/A479	7
1	1	3	-6	RETAINER	PLATE OR BAR 316/316L SST ASTM A240/A479	6
1	1	3	-5	PIPE, END	PIPE 316/316L SST ASTM A312	5
1	1	3	-4	PIPE	PIPE 316/316L SST ASTM A312	4
1	1	3		FILTER ELEMENT	PORVAIR SINTERED METAL GRADE S26, 316L SST	3
4	4	3	-2	GUIDE	PLATE OR BAR 316/316L SST ASTM A240/A479	2
		3	-1	OUTSIDE LEFT ASSEMBLY		1
		3	-0	OUTSIDE RIGHT ASSEMBLY		0

PARTS LIST

INSPECTION REQUIREMENTS	DASH NO.	
QC REQUIRED	–1	FINAL
(Q) DENOTES Q/C INSP. REQD.	–0	FINAL
		NEXT ASSY
		APPLICATION

DIMENSIONING AND SYMBOLOGY PER ASME Y14.5-2009 AND STD-11
UNLESS OTHERWISE SPECIFIED
SURFACE ROUGHNESS 125
DIMENSIONS AND TOLERANCES ARE IN INCHES
TOLERANCES .X ±.1
DECIMALS .XX ±.03
.XXX ±.010
FRACTIONS ±1/8
ANGULAR ±2°
DO NOT SCALE DRAWING

SIGNATURES/DATES APPLY TO CURRENT RELEASE ONLY. SIGN AND DATE.

DESIGN:	M.SLOVAK	Mark E. Slovak Huljon Assistant, LLC 2013.07.18 14:50:31 -06'00'
DRAFTER:	M.PENNINGTON	Matt Pennington CWI 2013.07.18 13:31:04 -06'00'
TECHNICAL CHECK:	D.KELLER PE	David E. Keller 2013.07.18 13:53:11 -06'00'
END GROUP SUPERVISOR:	R.EASTMAN PE	Randy Eastman CWI 2013.07.18 13:47:28 -06'00'
DESIGN LEAD:	B.REED PE	William H. Reed CWI 2013.07.18 14:58:16 -06'00'
DRAFTING CHECK/ EFFECTIVE DATE:	S.BERTHELSON	Jim Moncur CWI 2013.07.18 15:05:27 -06'00'
PROJECT NUMBER:	25038	
DRF NUMBER:	339605	

Idaho Cleanup Project CH2M·WG IDAHO, LLC

IWTU
CANISTER FILLING & DECON CELL
PRODUCT RECEIVER
COOLER OUTER RAIL ASSEMBLY

SIZE	INDEX CODE NUMBER				DWG-	REV
	AREA	TYPE	CI	DRW		
D	200	1696	47	136	781896	
SCALE: NOTED					FS	SHEET 1 OF 2

File: 781896.dwg
Path: V:\...\Vault\Design\IWTU\COOLER NOZZLES - CAN FAB CEL...
Layout Name: pmmm

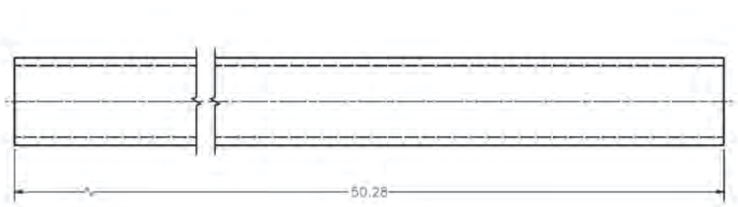

④ DETAIL
SCALE: 1/2

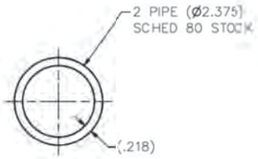

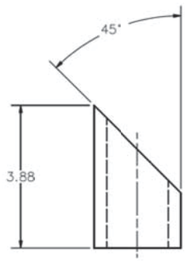

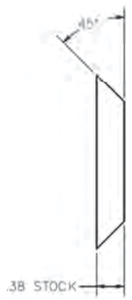

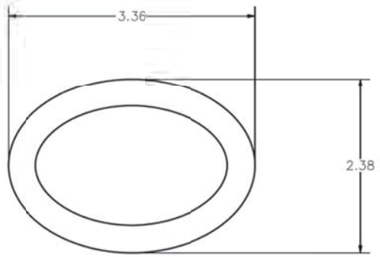

⑦ DETAIL
SCALE: 1/1

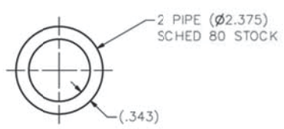

⑤ DETAIL
SCALE: 1/2

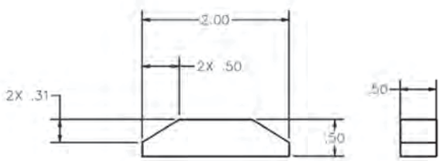

② DETAIL
SCALE: 1

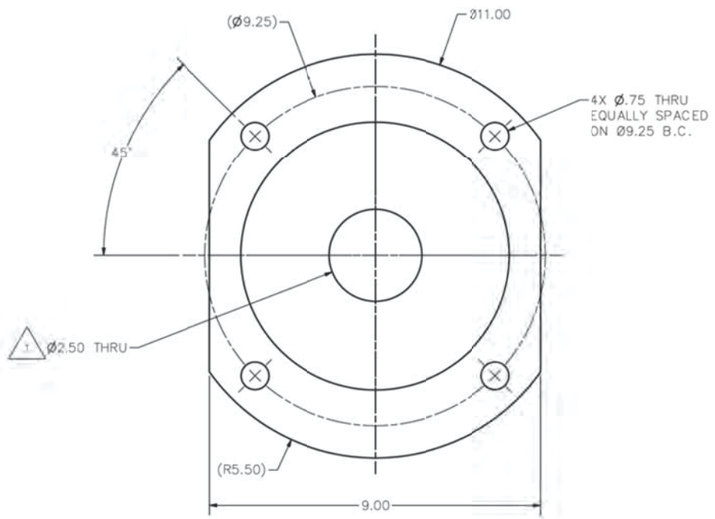

⑥ DETAIL
SCALE: 1/2

SIZE	INDEX CODE NUMBER				DWG-	REV
	AREA	TYPE	CL	OBJ		
D	200	1696	47	1.36	781896	
SCALE: NOTED					FS	SHEET 2

File: 781896.dwg
Path: V:\Vault Designs\INTERCOOLER NOZZLES - CAN FAB\781896.dwg
Layout Name:

F-SRC-169-A/B
COAL AIRLOCK PREHEPA FILTERS

MOT-SRB-837-201
COAL CONVEYOR MOTOR

HOP-SRC-137
COAL FEED BIN

WF-SRC-837
COAL VIBRATORY FEEDER

WF-SRC-835-A
ADDITIVE VIBRATORY FEEDER

HOP-SRC-135-A
ADDITIVE FEED HOPPER

F-SRC-137-A/-B
COAL FEEDER FILTER

FUN-SRC-837
COAL ACCUMULATION FUNNEL

ALOK-SRC-637
COAL AIRLOCK VESSEL

SG-SRC-637-A/-B
COAL AIRLOCK VALVE

VENDOR SUPPLIED

F-SRC-137-B
F-SRC-137-A
HOP-SRC-137
HOP-SRC-135-A
FUN-SRC-837
SG-SRC-637-A
SG-SRC-637-B
ALOK-SRC-637
WF-SRC-837
WF-SRC-835-A
WF-SRC-837 CONTROL PANEL
WF-SRC-835-A CONTROL PANEL
PLC-SRC-609
NOTE 2
F-SRC-169-B
F-SRC-169-A
PRE
HEPA
SC-SRB 837-001
MOT-SRB-837-201
03003 632779 COAL SILO
INERTING PRESSURE MONITORING
O2 CONCENTRATION SAMPLING PORT
633453 TO BUILDING HVAC DUCT
632740 INSTRUMENT AIR FROM STAND 603C
07317 632808 NITROGEN
632762 DMR
ATV-SRC-137-396
ATV-SRC-135-397
8" AUX PORT
18" EXPANSION JOINT
2" DRAIN
SEE NOTE 15
5 PSIG
14 PSIG
2.5 PSIG
ATM -5" W.C.

REVISION HISTORY

REV	DESCRIPTION
16	ACE-8481 AS OF 10/19/2015, INCORP'D TDC-13023, PRGM HISTORY REMARKS, SEE DRF-34688
17	ACE-8481 AS OF 01/10/2017, INCORP'D TDC-13809, SEE DRF-35278

Randy Eastman
Fluor Idaho
2017.01.31 08:34:41 -07'00'

PROFESSIONAL ENGINEER REGISTERED 4307 STATE OF IDAHO RANDY EASTMAN

I CERTIFY THAT THE CHANGES SHOWN ON THIS DRAWING REFLECT THE CURRENT CONSTRUCTED CONDITION AS OF 01/10/2017

NOTES

1. HOSE CONNECTION BETWEEN VIBRATORY FEEDER AND CHARCOAL ACCUMULATION FUNNEL.
2. PROGRAMMABLE LOGIC CONTROLLER PLC-SRC-609 MANAGES ALL COMMUNICATIONS BETWEEN THE WEIGHT FEEDERS AND THE DCS.
3. MOUNTING PAD FOR VIBRATOR IF REQUIRED.
4. FOR TYPICAL MOTOR SCHEMATIC SEE DWG 632758.
5. DELETED.
6. DELETED.
7. DELETED.
8. CHANGED INSTRUMENT AND VALVE TAG NUMBERS PER MCP-3785 AND EQUIPMENT TAG NUMBERS PER DCN-INTU-115.
9. DELETED.
10. DELETED.
11. DELETED.
12. SEE RSS DRAWING 632755.
13. VENDOR SUPPLIED EXCEPT DCS CONNECTIONS. APPLIES TO ENTIRE SHEET.
14. THE QUALITY LEVEL AND ASSOCIATED QUALITY LEVEL DETERMINATION FOR EQUIPMENT, INSTRUMENTS, AND COMPONENTS ON THIS DRAWING ARE IDENTIFIED ON THE "INTU PROJECT EQUIPMENT LIST" AS MAINTAINED UNDER MCP-3350, DATA MANAGEMENT OF CONFIGURATION MANAGED FIELDS IN THE INTU PROJECT EQUIPMENT LIST.
15. ON LOSS OF POWER VALVE FAILS CLOSED, FOLLOWED BY INFLATABLE SEAL INFLATION. ON LOSS OF AIR, VALVE FAILS LAST AND INFLATABLE SEAL DEFLATES.
16. ABANDONED IN PLACE.

Idaho Cleanup Project — Fluor Idaho

INTEC CPP-1696
INTEGRATED WASTE TREATMENT UNIT
PIPING & INSTRUMENT DIAGRAM
DMR ADDITIVE BIN

SIGNATURES/DATES APPLY TO CURRENT RELEASE ONLY

	SIGN AND DATE
DESIGN: NA	– –
DRAFTER: L. WILLIAMS	Jason Williams Fluor Idaho 2017.01.31 08:34:41 -07'00'
TECHNICAL CHECK: NA	– –
ENG GROUP SUPERVISOR: NA	– –
DESIGN LEAD/AUTHORITY: NA	– –
DRAFTING CHECK/ EFFECTIVE DATE: K. KELLER	Kris Keller Fluor Idaho 2017.01.31 10:55:20 -07'00'

NO SCALE

DESIGN PHASE:	
QUALITY LEVEL:	SEE NOTE 14
HORIZONTAL SCALE	NONE
VERTICAL SCALE	NA
FOR DRAWING INDEX SEE DRAWING NO.	632756
PROJECT NUMBER:	25051

INDEX CODE NUMBER			
AREA	SYS	SEQ	CHRO
200	1696	24	136

SIZE E — DWG- 632782 — REV 17
DRF NO. — SHEET P-33

Date: 01/30/17 11:17 AM Layout Name: 632782
Plotted By: Reynolds, Kevin A
Path: C:\Users\reynoka\Documents\632782_Layout1_Model.dwg
File: 632782-17.dwg

FUN-SRC-890 FILL NOZZLE PLUG FEEDER 0 NOTE 28

SPL-SRC-990 CANISTER FILL PORT 0 NOTE 28

FEED-SRC-890 CANISTER FILLING FEED NOZZLE 0 NOTE 28

CHT-SRC-190 PRODUCT RECEIVER/ COOLER STINGER 0

VES-SRC-190 PRODUCT RECEIVER/ COOLER 0

SPL-SRC-970 PRODUCT RECEIVER/COOLER 0 BIN ACTIVATOR

SPL-SRC-190-A/-B RECEIVER/COOLER 0 FLUIDIZING NOZZLE (2)

TH-SRC-990 LEVEL DETECTOR SYSTEM 0 NOTE 28

JET-SRC-520 CANISTER CELL EDUCTOR 0

THIS MARKUP COVERS CHANGES APPROVED ON THE FOLLOWING FDCs:

FDC-10928

NOTES:

1. DELETED.
2. DELETED.
3. TO FACILITATE THE CHANGE TO CALCINE PACKAGING, PIPING UPSTREAM OF THIS LOCATION WILL BE REPLACED.
4. DELETED.
5. DELETED.
6. DELETED.
7. SOLENOID VALVES AND I/P ARE LOCATED OUTSIDE SHIELDED AREA WITH PNEUMATIC TUBING INTO CELL.
8. DENOTES VALVES HAVING POSITION SWITCHES SHOWN (TYPICAL). SEE 632758. Ⓢ DENOTES SPECIALTY VALVE.
9. DURING DECONTAMINATION OF PRODUCT RECEIVER AND FILL PORT, DECON FLUID WILL BE DRAINED INTO A SPECIAL CANISTER. THE SPECIAL CANISTER WILL INCLUDE A JET TO EMPTY THE CANISTER INTO THE DECON FLUID SUMP SYSTEM FOR THE CONTAINMENT CELL.
10. PIPING IS SHIELDED BETWEEN 4-PACK AND CANISTER FILLING AREA.
11. AUXILIARY SOLIDS REMOVAL PIPE IN EVENT BOTTOM SOLIDS VALVE FAILS.
12. DELETED.
13. (N2), (N2 NNN) AND (P N) SEE DETAILS ON DWG. 632758.
14. DELETED.
15. DELETED.
16. FUTURE CALCINE RECEIPT LINE. LINE WILL HAVE WELDED PIPE CAPS. LINE WILL TERMINATE IN THE SHIELD UNDERGROUND WASTE FEED TRENCH AND IN THE SHIELDED PIPE RACK ADJACENT TO THE SOLIDS ROUTING VALVE.
17. DELETED.
18. PRESSURE FILLING TUBE DRIVE SYSTEM.
19. PRESSURE FILLING PLUM REEL ENCLOSURE.
20. CHANGED INSTRUMENT AND VALVE TAG NUMBERS PER MCP-3785 AND EQUIPMENT TAG NUMBERS PER DCN-INTU-115.
21. 3/16" CUSTOM SCREEN.
22. LOCATE BY WINDOW.
23. INSIDE SAMPLE CELL.
24. DELETED.
25. DELETED.
26. N2 PURGE AS CLOSE TO TOP OF VESSEL AS PRACTICAL FOR DILUTION AIR.
27. PROCESS SKID PACKAGE BOUNDARIES REMOVED.
28. VENDOR SUPPLIED: SEE ALSO DWG 632792
29. PRESSURE FILLING TUBE BETWEEN SEALS
30. TEMPORARY CONNECTION TO 3/4"-NG-SG-161061-N IS MADE BY FLEXIBLE HOSE FROM NA-SG-160601 (P&ID 632825).
31. THE QUALITY LEVEL AND ASSOCIATED QUALITY LEVEL DETERMINATION FOR EQUIPMENT, INSTRUMENTS AND COMPONENTS ON THIS DRAWING ARE IDENTIFIED ON THE "INTU PROJECT EQUIPMENT LIST" AS MAINTAINED UNDER MCP-3350, DATA MANAGEMENT OF CONFIGURATION MANAGED FIELDS IN THE INTU PROJECT EQUIPMENT LIST.
32. ON LOSS OF POWER, VALVE FAILS CLOSED ON LOSS OF AIR, VALVE FAILS LAST.
33. VALVE INTERNALS HAVE BEEN REMOVED.
34. REMOTE CONNECTORS ARE EQUIPPED WITH RETAINING DEVICES OR WIRE TIES TO PREVENT DISASSEMBLY.

REV	DESCRIPTION
25	AS BUILT AS OF 03/29/2016
	INCORP'D FDC-10583, PRIOR HISTORY
	REMOVED, SEE DRF-34833D

REVISION HISTORY

PROFESSIONAL ENGINEER REGISTERED 4307 STATE OF IDAHO JEFFREY EASTMAN

I CERTIFY THE CHANGES SHOWN ON THIS DRAWING REFLECT THE CURRENT CONSTRUCTED CONDITION AS OF 03/29/2016

NO SCALE

DESIGN PHASE:	
QUALITY LEVEL:	SEE NOTE 31
HORIZONTAL SCALE	NONE
VERTICAL SCALE	NA
FOR DRAWING INDEX SEE DRAWING NO.	632756
SIGNATURES/DATES APPLY TO CURRENT RELEASE ONLY	SIGN AND DATE
DESIGN: NA	– –
DRAFTER: A. KEY	
TECHNICAL CHECK: NA	– –
ENG GROUP SUPERVISOR: NA	– –
DESIGN LEAD/AUTHORITY: NA	– –
DRAFTING CHECK/ EFFECTIVE DATE: K. KELLER	

Idaho Cleanup Project

INTEC CPP-1696
INTEGRATED WASTE TREATMENT UNIT
PIPING & INSTRUMENT DIAGRAM

PRODUCT RECEIVER AND CANISTER FILLING SHEET 1

PROJECT NUMBER: 25051

INDEX CODE NUMBER

AREA	SYS	SEQ	SUBSEQ
200	1696	24	136

SIZE E | DWG- 632787 | REV 25 F1

DRF NO. -- | SHEET P-38

PWT-C1-REV 2014-01-29

ID: KEYAL Layout: Normal Date: 09/12/16 5:01 PM

File: 632787-25F1.dwg
Paths: K:\WTU\As-Builts\Essential\FDCs

NOTES:

1. DELETED.
2. DELETED.
3. DELETED.
4. DELETED.
5. DELETED.
6. SOLENOID VALVES AND I/P ARE LOCATED OUTSIDE SHIELDED AREA WITH PNEUMATIC TUBING INTO CELL.
7. DENOTES VALVES HAVING POSITION SWITCHES SHOWN (632758). Ⓢ DENOTES SPECIALTY VALVE.
8. DURING DECONTAMINATION OF FILL PORT, DECON FLUID WILL BE DRAINED INTO A SPECIAL CANISTER. THE SPECIAL CANISTER WILL INCLUDE A JET TO EMPTY THE CANISTER INTO THE DECON FLUID SUMP SYSTEM FOR THE CONTAINMENT CELL.
9. PIPING IS SHIELDED BETWEEN 4-PACK AND CANISTER FILLING AREA.
10. AUXILIARY SOLIDS REMOVAL PIPE IN EVENT BOTTOM SOLIDS VALVE FAILS.
11. LIQUID-TIGHT BALL VALVE TO BE CLOSED ONLY WHEN LIQUID IS TO BE ADMITTED INTO TANK.
12. (N2 NNN) SEE DETAILS ON DWG. 632758.
13. (N2) SEE DETAILS ON DWG. 632758.
14. DELETED.
15. DELETED.
16. DELETED.
17. (P N) SEE DETAILS ON DWG 632758.
18. DELETED.
19. PRESSURE FILLING TUBE DRIVE SYSTEM.
20. PRESSURE FILLING PLUM REEL ENCLOSURE.
21. CHANGED VALVE TAGS IN ACCORDANCE WITH MCP-3785.
22. 3/16" CUSTOM SCREEN.
23. LOCATE BY WINDOW.
24. INSIDE SAMPLE CELL.
25. CHANGED INSTRUMENT AND VALVE TAG NUMBERS PER MCP-3785 AND EQUIPMENT TAG NUMBERS PER DCN-IWTU-115.
26. DELETED.
27. DELETED.
28. LOCATE AS CLOSE TO VESSEL AS PRACTICAL FOR DILUTION AIR.
29. PROCESS SKID PACKAGE BOUNDARIES REMOVED.
30. VENDOR SUPPLIED: SEE DRAWING 632792.
31. PRESSURE FILLING TUBE BETWEEN SEALS.
32. TEMPORARY CONNECTION TO 3/4"-NG-SG-161062-N IS MADE BY FLEXIBLE HOSE FROM NA-SG-160601 (P&ID 632825).
33. THE QUALITY LEVEL AND ASSOCIATED QUALITY LEVEL DETERMINATION FOR EQUIPMENT, INSTRUMENTS, AND COMPONENTS ON THIS DRAWING ARE IDENTIFIED ON THE "IWTU PROJECT EQUIPMENT LIST" AS MAINTAINED UNDER MCC-3350, DATA MANAGEMENT OF CONFIGURATION MANAGED FIELDS IN THE IWTU PROJECT EQUIPMENT LIST.
34. REMOTE CONNECTORS ARE EQUIPPED WITH RETAINING DEVICES OR WIRE TIES TO PREVENT DISASSEMBLY.

REV	DESCRIPTION
20	PRIOR HISTORY REMOVED, AS-BUILT AS OF 03/29/2016, INCORP'D FDC-10593 SEE DRF-348330

REVISION HISTORY

Randy Eastman
CWI
2016.03.30 13:27:16 -06'00'

PROFESSIONAL ENGINEER REGISTERED 4307 STATE OF IDAHO RANDY EASTMAN

I CERTIFY THE CHANGES SHOWN ON THIS DRAWING REFLECT THE CURRENT CONSTRUCTED CONDITION AS OF 03/29/2016

NO SCALE

DESIGN PHASE:	
QUALITY LEVEL:	SEE NOTE 33
HORIZONTAL SCALE	NONE
VERTICAL SCALE	NA

FOR DRAWING INDEX SEE DRAWING NO. 632756

SIGNATURES/DATES APPLY TO CURRENT RELEASE ONLY

	SIGN AND DATE
DESIGN: NA	– –
DRAFTER: A. KEY	Angela L Key Nuclear Technology 2016.03.30 10:33:59 -06'00'
TECHNICAL CHECK: NA	– –
ENG GROUP SUPERVISOR: NA	– –
DESIGN LEAD/AUTHORITY: NA	– –
DRAFTING CHECK/ EFFECTIVE DATE: K. KELLER	Kris Keller CWI 2016.03.30 14:00:22 -06'00'

Idaho Cleanup Project CH2M•WG IDAHO, LLC

INTEC CPP-1696 INTEGRATED WASTE TREATMENT UNIT PIPING & INSTRUMENT DIAGRAM

PRODUCT RECEIVER AND CANISTER FILLING SHEET 2

PROJECT NUMBER: 25051

INDEX CODE NUMBER			
AREA	TYPE	CL	ORIG
200	1696	24	136

SIZE E DWG- 632788 REV 20

DRF NO. -- SHEET P-39

FMT-E1-REV 2014-01-29

File: 632788-20.dwg Path: K:\IWTU\As-Builts\DRF-348330 Date: 03/29/16 - 9:43 AM Layout Name: P-39 ID: KEYAL

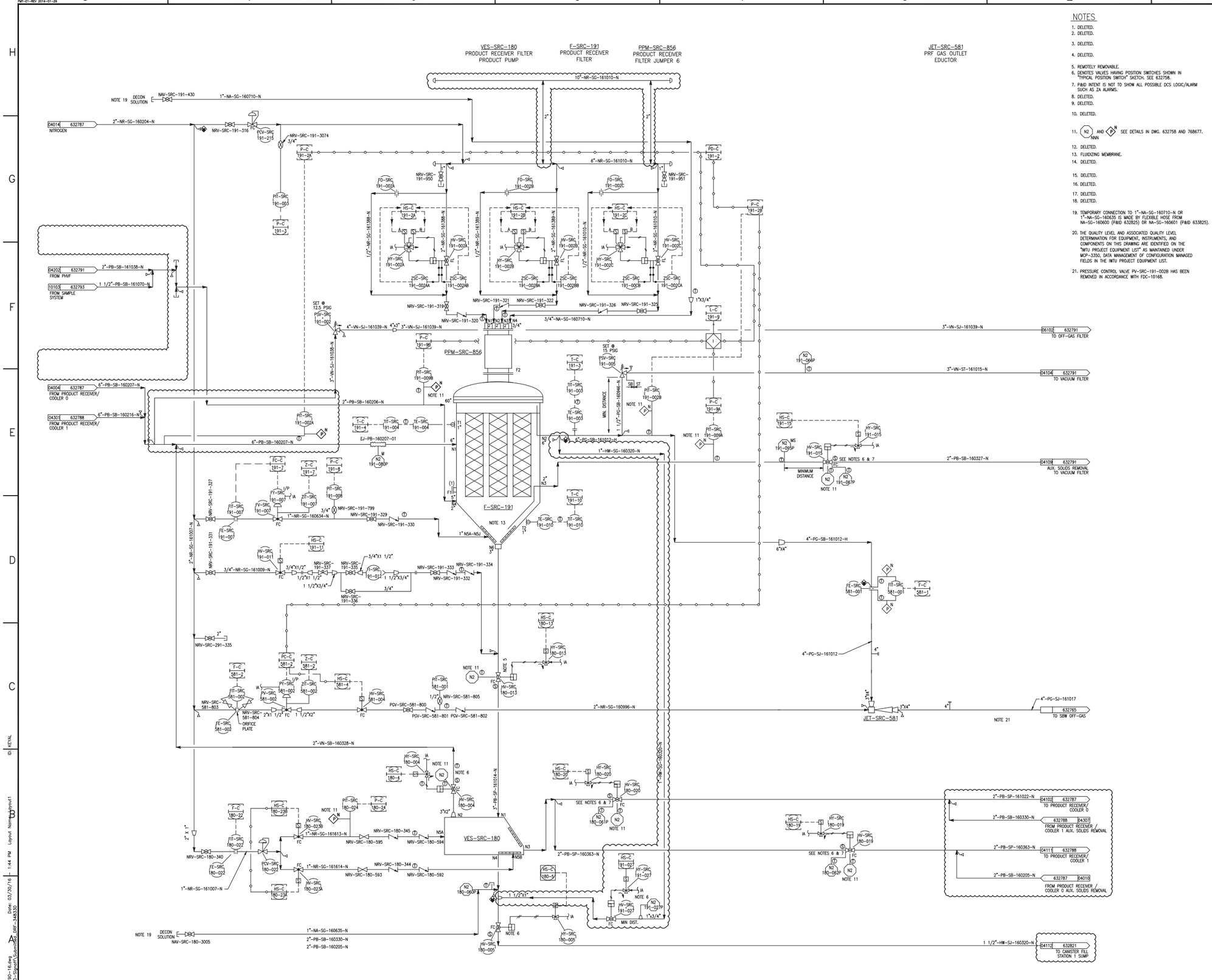

NOTES

1. DELETED.
2. DELETED.
3. DELETED.
4. DELETED.
5. REMOTELY REMOVABLE.
6. DENOTES VALVES HAVING POSITION SWITCHES SHOWN IN "TYPICAL POSITION SWITCH" SKETCH. SEE 632758.
7. P&ID INTENT IS NOT TO SHOW ALL POSSIBLE DCS LOGIC/ALARM SUCH AS ZA ALARMS.
8. DELETED.
9. DELETED.
10. DELETED.
11. N2 NNN AND P N SEE DETAILS IN DWG. 632758 AND 768677.
12. DELETED.
13. FLUIDIZING MEMBRANE.
14. DELETED.
15. DELETED.
16. DELETED.
17. DELETED.
18. DELETED.
19. TEMPORARY CONNECTION TO 1"-NA-SG-160710-N OR 1"-NA-SG-160635 IS MADE BY FLEXIBLE HOSE FROM NA-SG-160600 (P&ID 632825) OR NA-SG-160601 (P&ID 633825).
20. THE QUALITY LEVEL AND ASSOCIATED QUALITY LEVEL DETERMINATION FOR EQUIPMENT, INSTRUMENTS, AND COMPONENTS ON THIS DRAWING ARE IDENTIFIED ON THE "IWTU PROJECT EQUIPMENT LIST" AS MAINTAINED UNDER MCP-3350, DATA MANAGEMENT OF CONFIGURATION MANAGED FIELDS IN THE IWTU PROJECT EQUIPMENT LIST.
21. PRESSURE CONTROL VALVE PV-SRC-191-0028 HAS BEEN REMOVED IN ACCORDANCE WITH FDC-10168.

REV	DESCRIPTION
16	PRIOR HISTORY REMOVED, AS-BUILT
	AS OF 03/29/2016, INCORP'D FDC
	10590, 10593, 10638, 10676
	SEE DRF-348330

REVISION HISTORY

Randy Eastman
CWI
2016.03.30 16:57:06'00'

PROFESSIONAL ENGINEER REGISTERED 4307 STATE OF IDAHO RANDY EASTMAN

I CERTIFY THE CHANGES SHOWN ON THIS DRAWING REFLECT THE CURRENT CONSTRUCTED CONDITION AS OF 03/29/2016

NO SCALE

DESIGN PHASE:

QUALITY LEVEL:	SEE NOTE 20
HORIZONTAL SCALE	NONE
VERTICAL SCALE	NA

FOR DRAWING INDEX SEE DRAWING NO. 632756

SIGNATURES/DATES APPLY TO CURRENT RELEASE ONLY

	SIGN AND DATE
DESIGN: NA	– –
DRAFTER: A. KEY	Angela L. Key Nuclear Technology 2016.03.30 16:32:09 -06'00'
TECHNICAL CHECK: NA	– –
ENG GROUP SUPERVISOR: NA	– –
DESIGN LEAD/AUTHORITY: NA	– –
DRAFTING CHECK/ EFFECTIVE DATE: K. KELLER	Kris Keller CWI 2016.03.30 16:57:02 -06'00'

Idaho Cleanup Project

INTEC CPP-1696
INTEGRATED WASTE TREATMENT UNIT
PIPING & INSTRUMENT DIAGRAM

PRODUCT COOLING

PROJECT NUMBER: 25051

INDEX CODE NUMBER			
AREA	PIPE	SEQ	DISC
200	1696	24	136

SIZE E DWG- 632790 REV 16

DRF NO. -- SHEET P-41

File: 632790-16.dwg Date: 03/30/16 1:44 PM Layout Name: Layout1 ID: KEYAL
Path: K:\0-Signoff\Submitted_DRF-348330

F-SRC-190
PRODUCT HANDLING VACUUM FILTER

JET-SRC-540
VACUUM FILTER EDUCTOR

PPM-SRC-857
PRODUCT HANDLING VACUUM FILTER JUMPER 7

JET-SRC-588
CANISTER VACUUM EDUCTOR

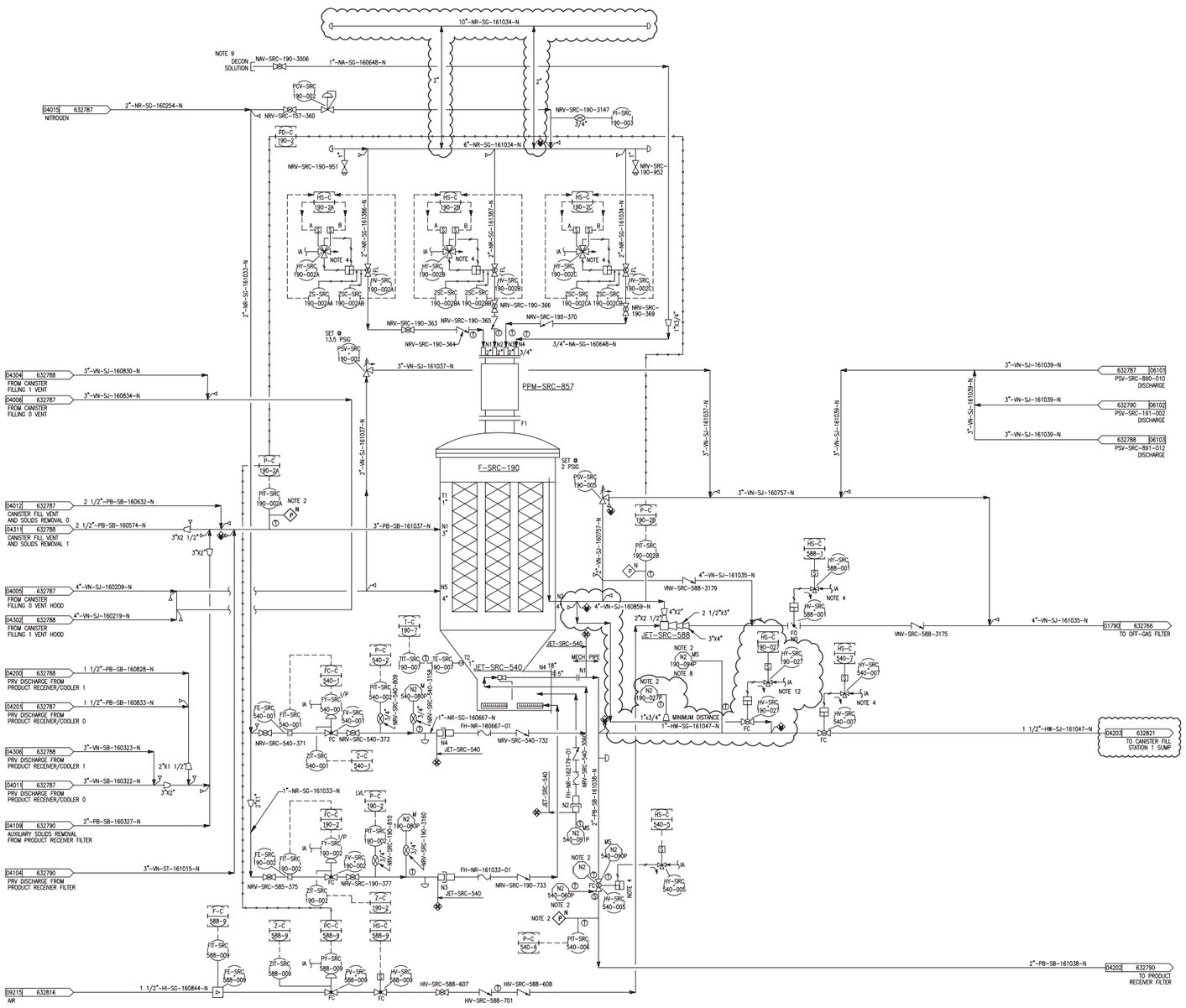

NOTES

1. DELETED.
2. (N2 ANN) SEE DETAILS ON DWG. 632758. (LINE PURGE)
   (N2 VLV) SEE DETAILS ON DWG. 632758. (VALVE PURGE)
   (P N) SEE DETAILS ON DWG. 632758. (INSTRUMENT PURGE)
3. DELETED.
4. SEE TYPICAL VALVE SWITCHES ON DWG. 632758.
5. DELETED.
6. DELETED.
7. DELETED.
8. A ROTOMETER HAS BEEN ADDED TO THIS N2 METERED PURGE W/ PULSE TO PROVIDE VARIABLE N2 FOR PROPER SOLIDS/GAS MIXING.
9. TEMPORARY CONNECTION TO 1"-NA-SG-160648-N IS MADE BY FLEXIBLE HOSE FROM NA-SC-160601 (PAID 632825).
10. THE QUALITY LEVEL AND ASSOCIATED QUALITY LEVEL DETERMINATION FOR EQUIPMENT, INSTRUMENTS, AND COMPONENTS ON THIS DRAWING ARE IDENTIFIED ON THE "IWTU PROJECT EQUIPMENT LIST" AS MAINTAINED UNDER MCP-3350, DATA MANAGEMENT OF CONFIGURATION MANAGED FIELDS IN THE IWTU PROJECT EQUIPMENT LIST.
11. REMOTE CONNECTORS ARE EQUIPPED WITH RETAINING DEVICES OR ARE SET IN DRYER ENCLOSURES (GASKETED).
12. DENOTES VALVES HAVING POSITION SWITCHES SHOWN IN "TYPICAL POSITION SWITCH" SKETCH. SEE 632758.

REV	DESCRIPTION
13	AS BUILT AS OF 03/24/2016, INCORP'D
	FDC-10590, 10639, 10676, PRIOR
	HISTORY REMOVED, SEE DRF-348303

REVISION HISTORY

Randy Eastman
CIVil
2016.03.31 10:16:06 -06'00'

PROFESSIONAL ENGINEER
4307
STATE OF IDAHO
RANDY EASTMAN

I CERTIFY THE CHANGES SHOWN ON THIS DRAWING REFLECT THE CURRENT CONSTRUCTED CONDITION AS OF 03/24/2016

NO SCALE

DESIGN PHASE:	
QUALITY LEVEL:	SEE NOTE 10
HORIZONTAL SCALE	NONE
VERTICAL SCALE	NA
FOR DRAWING INDEX SEE DRAWING NO.	632756
SIGNATURES/DATES APPLY TO CURRENT RELEASE ONLY	SIGN AND DATE
DESIGN: NA	– –
DRAFTER: A. KEY	Angela L. Key Lockheed Martin Services 2016.03.31 10:04:45 -06'00'
TECHNICAL CHECK: NA	– –
ENG GROUP SUPERVISOR: NA	– –
DESIGN LEAD/AUTHORITY: NA	– –
DRAWING CHECK/ EFFECTIVE DATE: K. KELLER	Kris Keller CWI 2016.03.31 10:18:27 -06'00'

Idaho Cleanup Project

INTEC CPP-1696
INTEGRATED WASTE TREATMENT UNIT
PIPING & INSTRUMENT DIAGRAM
CANISTER VACUUM

PROJECT NUMBER: 25051

INDEX CODE NUMBER			
AREA	TYPE	SEQ	CHECK
200	1696	24	136

SIZE E | DWG- 632791 | REV 13

DRF NO. --- | SHEET P-42

ID: KEYAL
Date: 03/30/16 10:21 AM Layout Name: Layout1
File: 632791-13.dwg
Path: G:\IWTU\As-Builts\DRF-348303

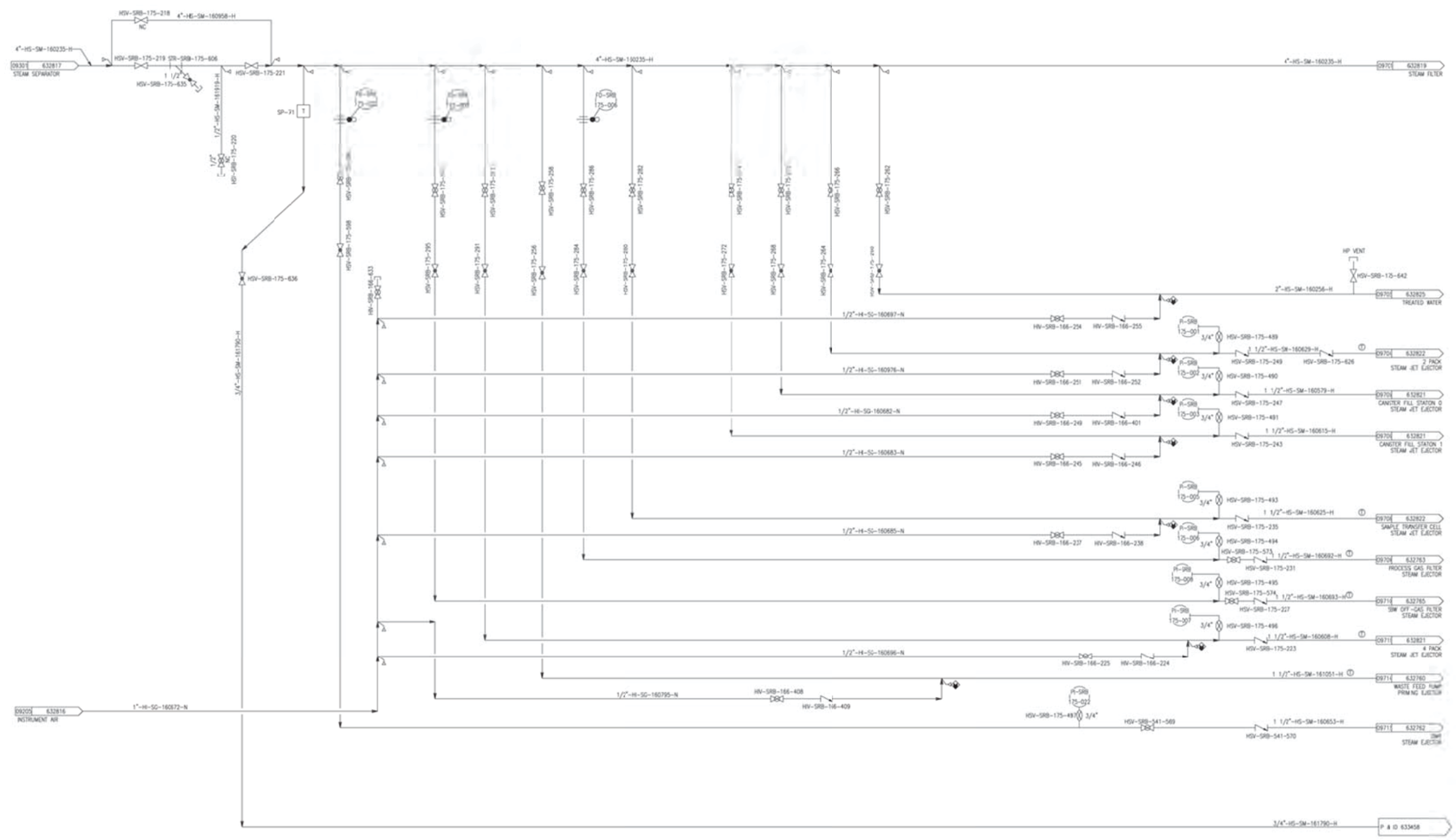

NOTES:

1. DELETED.
2. DELETED.
3. DELETED.
4. DELETED.
5. DELETED.
6. DELETED.
7. DELETED.
8. THE QUALITY LEVEL AND ASSOCIATED QUALITY LEVEL DETERMINATION FOR EQUIPMENT, INSTRUMENTS, AND COMPONENTS ON THIS DRAWING ARE IDENTIFIED ON THE "INTO PROJECT EQUIPMENT LIST" AS MAINTAINED UNDER MCP-3350 DATA MANAGEMENT OF CONFIGURATION MANAGED FIELDS IN THE INTO PROJECT EQUIPMENT LIST.

REV	DESCRIPTION
9	AS BUILT AS OF 10/15/2011, SUBMITTAL TO STATE FOR RCRA PERMIT, SEE DRF-34083
	PRIOR HISTORY REMOVED

REVISION HISTORY

Randy Eastman
CWI
2013.12.14 21:04:29 -07'00'
4307
STATE OF IDAHO
RANDY EASTMAN

I CERTIFY THAT THIS DRAWING REFLECTS THE CURRENT, CONSTRUCTED CONDITION AS OF 10/15/2013

NO SCALE

DESIGN/FINAL: SEE NOTE 8
NONE
NA
632759
SIGNATURES/DATES APPLY TO CURRENT RELEASE ONLY
SIGN AND DATE
DESIGN: NA
DRAFTER: J. MONCUR
TECHNICAL CHECK: NA
ENG GROUP SUPERVISOR: NA
DESIGN LEAD: NA
DRAFTING CHECK/ EFFECTIVE DATE: K. KELLER

Idaho Cleanup Project

INTEC CPP-1696
INTEGRATED WASTE TREATMENT UNIT
PIPING & INSTRUMENT DIAGRAM

STEAM DISTRIBUTION

PROJECT NUMBER: 25051

DRAWN	CHECKED	APPROVED	DATE
200	1696	24	136

SIZE E | DWG 632818 | REV 9
DRF NO. — | SHEET P-69

INV: FMT-D1-REV 2014-01-29

REVISIONS	
REV	DESCRIPTION
1	SEE DRF 323818
2	SEE DRF 324913
3	SEE DRF 341213 INCORPORATED FCN-01335, FCN-03145, FDC-8213, FDC-8601, FDC-8691, FDC-8697, FDC-8706
4	COMPLETELY REDRAWN TO REFLECT CURRENT CONDITIONS, SEE DRF 346929

NOTES:

1. WELDING IS TO BE CARRIED OUT IN ACCORDANCE WITH INL WELD PROCEDURE H2.16 USING WELD FILLTER METAL AS STATED ON THE WPS.
2. THIS DRAWING REFLECTS THE CURRENT OGF FILTER BUNDLE DESIGN.
3. (Q) VISUAL WELD INSPECTION TO BE PERFORMED IN ACCORDANCE WITH TPR-4981, AND IS TO INCLUDE IN-PROCESS EXAMINATION PER SECTION 4.4. FINAL WELD ACCEPTANCE CRITERIA TO BE IN ACCORDANCE WITH TPR-4981, APPENDIX B (VISUAL ACCEPTANCE CRITERIA FOR ASME BPVC SECTION VIII, DIV. 1, WELDS, BASE METALS AND BRAZING).
4. (Q) INSPECTION OF ATTACHMENT WELDS BETWEEN THE THREADED ADAPTERS AND THE TUBESHEET IS TO INCLUDE A LIQUID PENETRANT EXAMINATION, AS REQUIRED BY ASME BPVC SECTION VIII, DIV. 1, PARA. UNF-58(c), IN ACCORDANCE WITH TPR-4975.
5. INSTALL 2 BELLEVILLE WASHERS, ITEM 8, ONTO BOLT, ITEM 6. PLACE WASHERS CUP-TO-CUP SEQUENTIALLY TORQUE ALL 3 VENTURI BLOCK ASSEMBLY BOLTS AT INTERVALS OF 10, 15, 20, 30, 40 AND 50 FT-LBS, ENSURING THE VENTURI BLOCK REMAINS LEVEL. TORQUE VENTURI BLOCK ASSEMBLY CENTERLINE BOLTS (ITEM 6) TO 84 FT-LBS. ENSURE THE CONSISTENCY OF THE TORQUE FOR THE BOLTS, REPEAT THE 50 FT-LBS TORQUE VALUE AND 84 FT-LBS. TORQUE VALUE.
6. MATERIAL SHALL HAVE ACTUAL CERTIFIED MATERIAL TEST REPORTS (CMTR) ISSUED BY THE ORIGINAL MANUFACTURER OR INDEPENDENT TESTING LABORATORY PERFORMING MATERIAL TESTING WHICH CERTIFIES THAT THE MATERIAL HAS BEEN INSPECTED AND TESTED IN ACCORDANCE WITH THE DESIGNATED MATERIAL REQUIREMENTS.

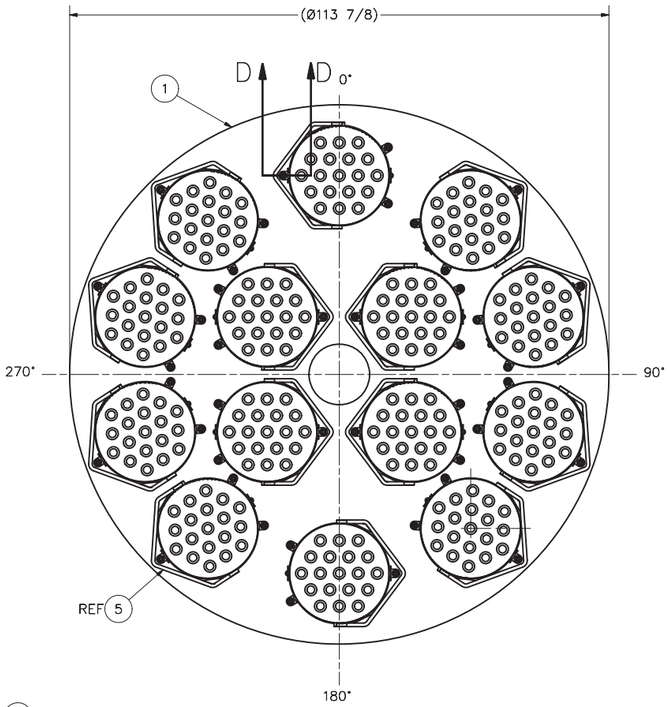

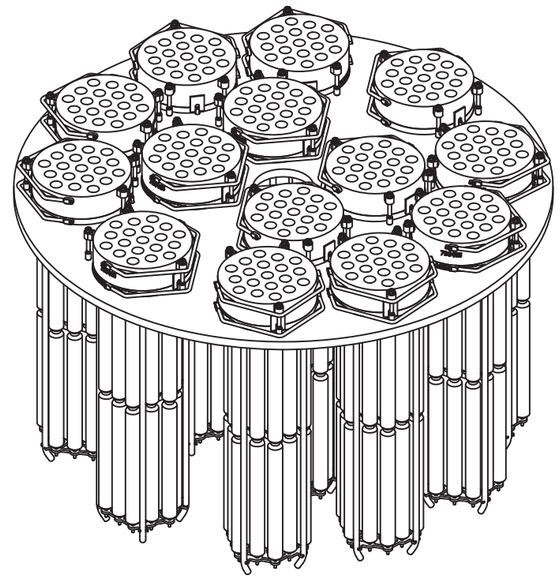

3D VIEW

(SHOWN FOR CLARITY)
SCALE: NONE

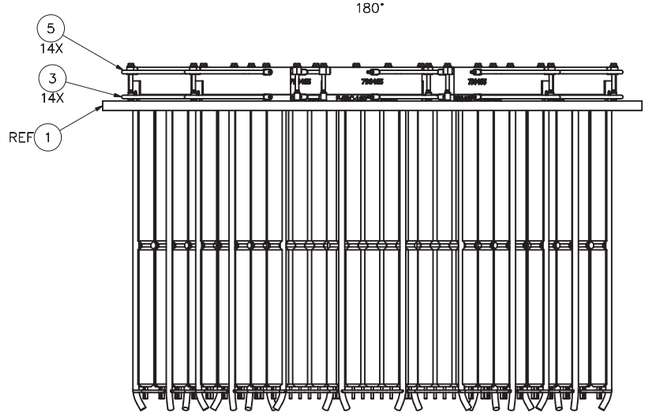

-0 ASSEMBLY

SCALE: 1/16

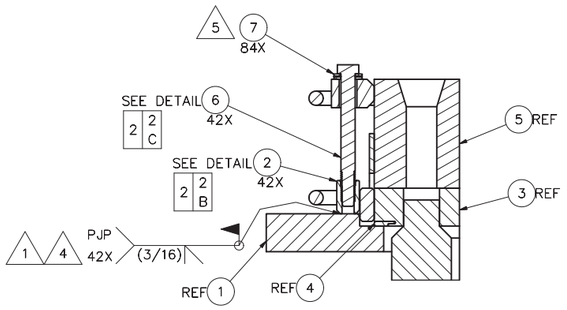

SECTION D-D

SCALE: 1/4

		QTY REQD	DASH NO.	QUAL LEVEL	PART OR IDENTIFYING NO.	NOMENCLATURE OR DESCRIPTION	MATERIAL/SPECIFICATION OR VENDOR NAME	ITEM NO.
6		84	3		12H150177	BELLEVILLE WASHER, 17-4PH SS	SOLON MANUFACTURING	7
6		42	3		-6	HEX HEAD BOLT, 3/4 X 7 LG	GRADE B8M, CLASS 1, UNS S31600 ASTM A193	6
		14			796465-0	VENTURI BLOCK ASSEMBLY		5
		14			796422-0	SUB TUBE SHEET GASKET		4
		14			796461-0	SUB TUBE SHEET ASSEMBLY		3
6		42	3		-2	THREADED ADAPTER	BAR, SOLUTION ANNEALED UNS N08367 ASTM B688 OR B691	2
		1			1050302-M-003-2	EXISTING TUBE SHEET	PREMIER TECHNOLOGY INC.	1
			3		-0	ASSEMBLY		0

PARTS LIST

INSPECTION REQUIREMENTS	-0	FINAL
QC REQUIRED	DASH NO.	NEXT ASSY
(Q) DENOTES Q/C INSP. REQD.	APPLICATION	

DIMENSIONING AND SYMBOLOGY PER ASME Y14.5-2009 AND STD-11

UNLESS OTHERWISE SPECIFIED

SURFACE ROUGHNESS 125

DIMENSIONS AND TOLERANCES ARE IN INCHES

TOLERANCES .X ±.1
DECIMALS .XX ±.03
.XXX ±.010
FRACTIONS ±1/8
ANGULAR ±2°

DO NOT SCALE DRAWING

SIGNATURES/DATES APPLY TO CURRENT RELEASE ONLY	SIGN AND DATE
DESIGN: D. KELLER, P.E.	David E. Keller CWI 2016.04.20 10:05:08 -06'00'
DRAFTER: T. ROMRIELL	T.J. Romriell Hukari 2016.04.19 15:08:31 -06'00'
TECHNICAL CHECK: M. SLOVAK	Randy Eastman CWI 2016.04.20 09:29:38 -06'00'
ENG GROUP SUPERVISOR: R. EASTMAN, P.E.	Randy Eastman CWI 2016.04.20 09:29:46 -06'00'
DESIGN LEAD/AUTHORITY: W.H. REED, P.E.	William H. Reed CWI 2016.04.20 10:57:10 -06'00'
DRAFTING CHECK/ EFFECTIVE DATE: K. KELLER	Kris Keller CWI 2016.04.20 11:27:20 -06'00'
PROJECT NUMBER: 25051	
DRF NUMBER: 323215	

Idaho Cleanup Project — CH2M•WG IDAHO, LLC

CPP-1696
IWTU
F-SRC-160
OGF BUNDLE
CONFIGURATION & DETAILS

SIZE	INDEX CODE NUMBER				DWG-	REV
	AREA	TYPE	CL	ORIG	570000	4
D	200	1696	47	136		
SCALE: NOTED					SHEET 1 OF 2	

ID: romrtj
Layout Name:
File: 570000-R4.dwg
Path: Y:\Vault\Designs\IWTU\OGF FILTER DWG\570000-R4.dwg

INV: FMT-D1-REV 2014-01-29

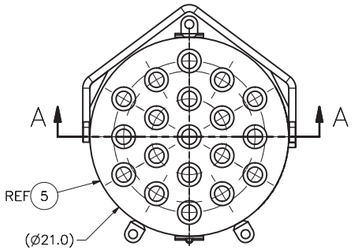

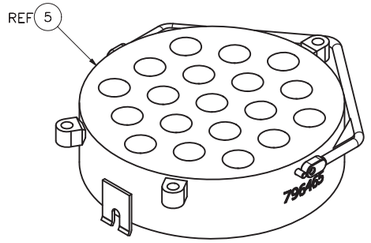

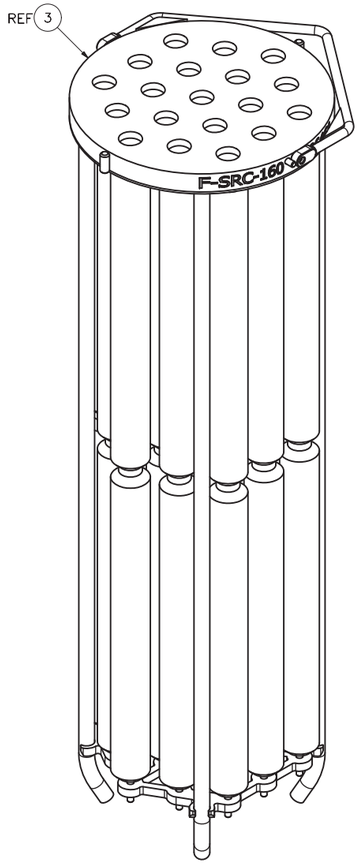

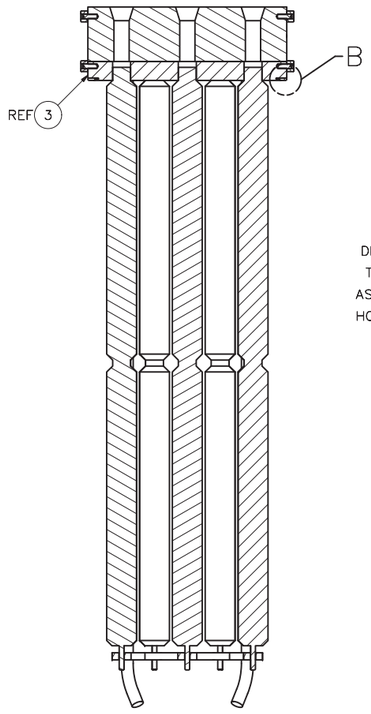

SECTION A–A
SCALE: 1/8

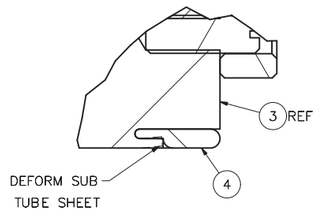

VIEW B
SCALE: 1/1

3D VIEW
(SHOWN FOR CLARITY)
SCALE: NONE

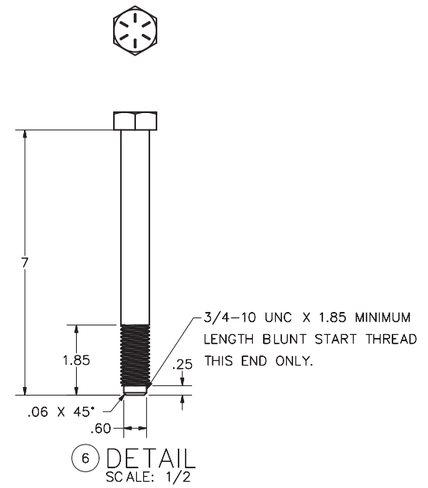

6 DETAIL
SCALE: 1/2

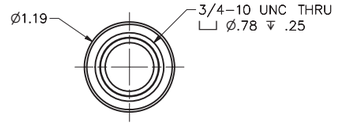

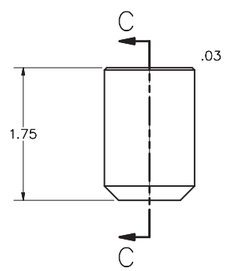

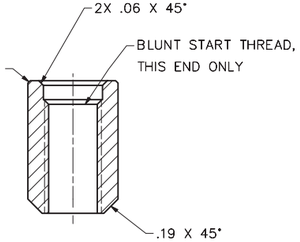

2 DETAIL
SCALE: 1/1

SECTION C–C
SCALE: 1/1

SIZE	INDEX CODE NUMBER				DWG–	570000	REV
	AREA	TYPE	CL	ORIG			4
D	200	1696	47	136			
SCALE: NOTED						SHEET 2	

ID: romrtj
Layout Name:
File: 570000-R4.dwg
Path: Y:\Vault\Designs\WITOGF FILTER DWG\570000-R4.dwg

INV: FMT-01-REV 2014-01-29

REVISIONS	
REV	DESCRIPTION
1	SEE DRF 323818
2	SEE DRF 324913
3	SEE DRF 341213 INCORPORATED FCN-01335, FCN-03145, FDC-8213, FDC-8601, FCD-8691, FDC-8697, FCD-8706
4	COMPLETELY REDRAWN TO REFLECT CURRENT CONDITIONS, SEE DRF 346929

NOTES:

1. WELDING IS TO BE CARRIED OUT IN ACCORDANCE WITH INL WELD PROCEDURE H2.17 USING USING WELD FILLER METAL AS STATED ON THE WPS.
2. THIS DRAWING REFLECTS THE CURRENT PGF FILTER BUNDLE DESIGN.
3. (Q) VISUAL WELD INSPECTION TO BE PERFORMED IN ACCORDANCE WITH TPR-4981, AND IS TO INCLUDE IN-PROCESS EXAMINATION PER SECTION 4.4. FINAL WELD ACCEPTANCE CRITERIA TO BE IN ACCORDANCE WITH TPR-4981, APPENDIX B (VISUAL ACCEPTANCE CRITERIA FOR ASME BPVC SECTION VIII, DIV. 1, WELDS, BASE METALS AND BRAZING).
4. (Q) INSPECTION OF ATTACHMENT WELDS BETWEEN THE THREADED ADAPTERS AND THE TUBESHEET IS TO INCLUDE A LIQUID PENETRANT EXAMINATION, AS REQUIRED BY ASME BPVC SECTION VIII, DIV. 1, PARA. UNF-58(c), IN ACCORDANCE WITH TPR-4975.
5. INSTALL 2 BELLEVILLE WASHERS, ITEM 7, ONTO BOLT, ITEM 6. PLACE WASHERS CUP-TO-CUP SEQUENTIALLY TORQUE ALL 3 VENTURI BLOCK ASSEMBLY BOLTS AT INTERVALS OF 10, 15, 20, 30, 40 AND 50 FT-LBS, ENSURING THE VENTURI BLOCK REMAINS LEVEL. TORQUE VENTURI BLOCK ASSEMBLY CENTERLINE BOLTS TO 84 FT-LBS. ENSURE THE CONSISTENCY OF THE TORQUE FOR THE BOLTS, REPEAT THE 50 FT-LBS TORQUE VALUE AND 84 FT-LBS. TORQUE VALUE.
6. MATERIAL SHALL HAVE ACTUAL CERTIFIED MATERIAL TEST REPORTS (CMTR) ISSUED BY THE ORIGINAL MANUFACTURER OR INDEPENDENT TESTING LABORATORY PERFORMING MATERIAL TESTING WHICH CERTIFIES THAT THE MATERIAL HAS BEEN INSPECTED AND TESTED IN ACCORDANCE WITH THE DESIGNATED MATERIAL REQUIREMENTS.

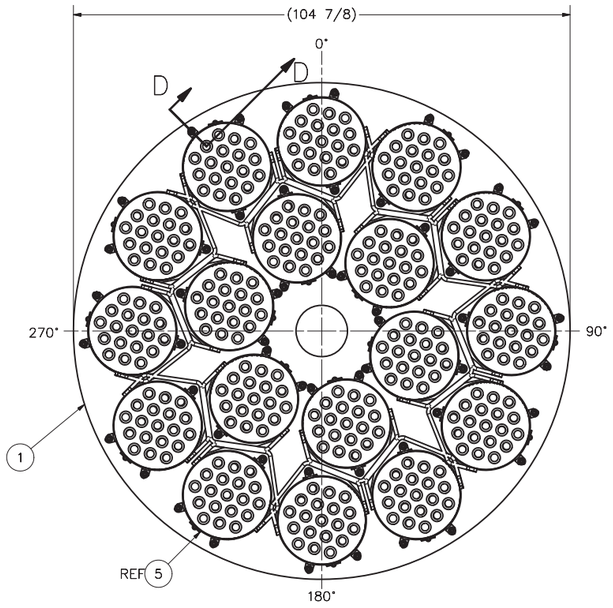

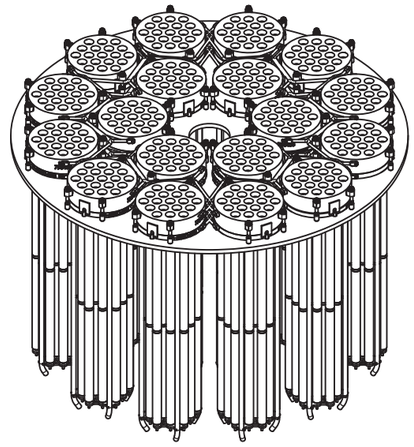

3D VIEW

(SHOWN FOR CLARITY)
SCALE: NONE

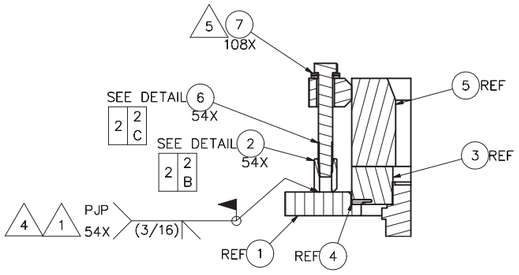

SECTION D-D

SCALE: 1/4

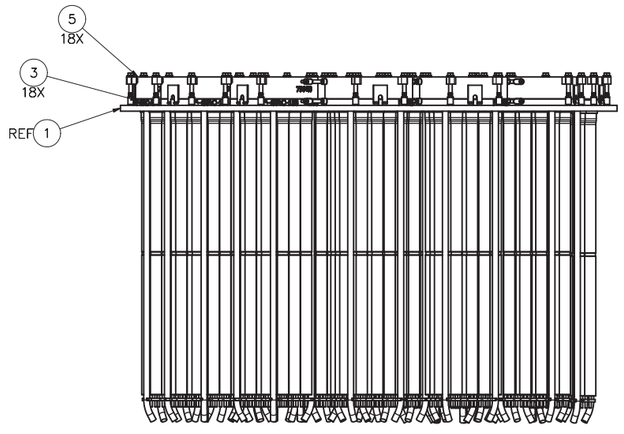

-0 ASSEMBLY
SCALE: 1/16

6		108	3	12H150718	BELLEVILLE WASHER, INCONEL 718	SOLON MANUFACTURING	7
6		54	3	-6	HEX HEAD BOLT, 3/4 X 5 1/2 LG	GRADE 1, ANNEALED, ASTM A193 UNS N06625	6
		18		796468-0	VENTURI BLOCK ASSEMBLY		5
		18		796423-1	SUB TUBE SHEET GASKET		4
		18		796466-0	SUB TUBE SHEET ASSEMBLY		3
6		54	3	-2	THREADED ADDAPTER	BAR, UNS N08367 ASTM B688 OR B691	2
		1		1020602-M-007-2	EXISTING TUBE SHEET	PREMIER TECHNOLOGY INC.	1
			3	-0	PGF ASSEMBLY		0
		-0 QTY REQD	QUAL LEVEL	PART OR IDENTIFYING NO.	NOMENCLATURE OR DESCRIPTION	MATERIAL/SPECIFICATION OR VENDOR NAME	ITEM NO.

PARTS LIST

INSPECTION REQUIREMENTS	-0	FINAL
QC REQUIRED	DASH NO.	NEXT ASSY
(Q) DENOTES Q/C INSP. REQD.	APPLICATION	

DIMENSIONING AND SYMBOLOGY PER ASME Y14.5-2009 AND STD-11

UNLESS OTHERWISE SPECIFIED

SURFACE ROUGHNESS 125

DIMENSIONS AND TOLERANCES ARE IN INCHES

TOLERANCES .X ±.1
DECIMALS .XX ±.03
.XXX ±.010
FRACTIONS ±1/8
ANGULAR ±2°

DO NOT SCALE DRAWING

SIGNATURES/DATES APPLY TO CURRENT RELEASE ONLY — SIGN AND DATE

DESIGN:	D. KELLER, P.E.	David E. Keller CWI 2016.04.20 10:04:43 -06'00'
DRAFTER:	T. ROMRIELL	T.J. Romriell Hukari 2016.04.19 15:55:20 -06'00'
TECHNICAL CHECK:	M. SLOVAK	Randy Eastman CWI 2016.04.20 09:30:04 -06'00'
ENG GROUP SUPERVISOR:	R. EASTMAN, P.E.	Randy Eastman CWI 2016.04.20 09:30:12 -06'00'
DESIGN LEAD/AUTHORITY:	W.H. REED, P.E.	William H. Reed CWI 2016.04.20 10:57:25 -06'00'
DRAFTING CHECK/ EFFECTIVE DATE:	K. KELLER	Kris Keller CWI 2016.04.20 11:25:03 -06'00'

PROJECT NUMBER: 25051
DRF NUMBER: 323215

Idaho Cleanup Project — CH2M•WG IDAHO, LLC

CPP-1696
IWTU
DMR CELL & FILLING STATION
PGF FILTER ASSEMBLY

SIZE	INDEX CODE NUMBER				DWG-	REV
	AREA	TYPE	CL	ORIG		
D	200	1696	47	136	570001	4

SCALE: NOTED — SHEET 1 OF 2

File: 570001.dwg
Path: V:\Vault Designs\IWTU\PGF\570001\570001.dwg
Layout Name:
ID: pennmr

INV: FMT-01-REV 2014-01-29

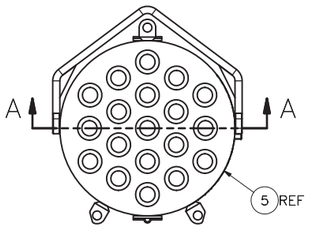

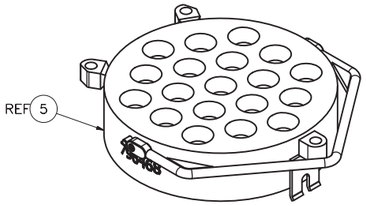

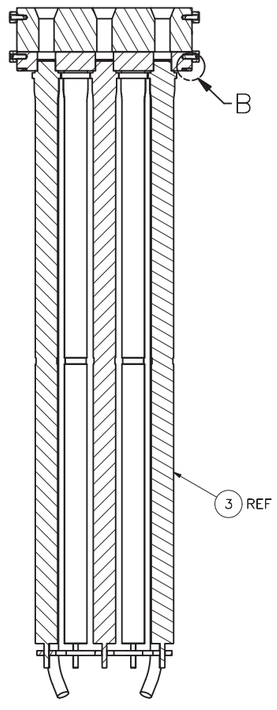

SECTION A–A
SCALE: 1/8

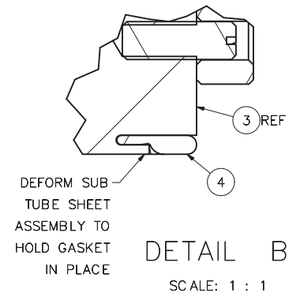

DETAIL B
SCALE: 1 : 1

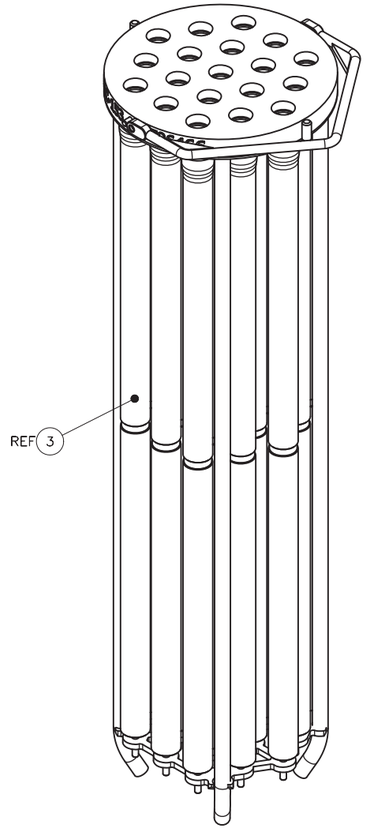

3D VIEW
(SHOWN FOR CLARITY)
SCALE: NONE

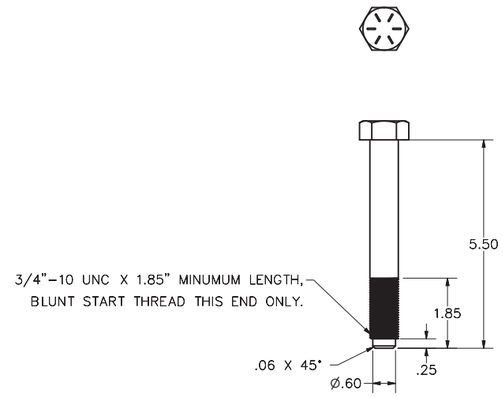

6 DETAIL
SCALE: 1/2

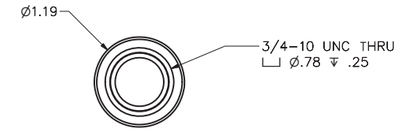

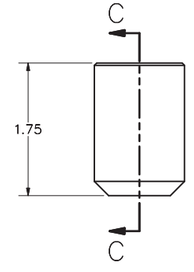

2 DETAIL
SCALE: 1/1

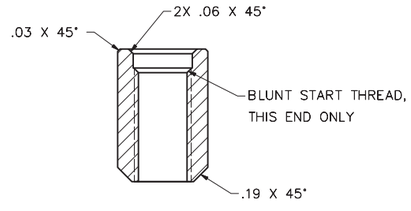

SECTION C–C
SCALE: 1/1

SIZE	INDEX CODE NUMBER				DWG–	REV
	AREA	TYPE	CL	ORIG	570001	4
D	200	1696	47	136		
SCALE: NOTED					SHEET 2	

ID: pennmr
Layout Name:
File: 570001.dwg
Path: Y:_Vault\Designs\WTP\PGP\570001\570001.dwg

P-SRC-133	P-SRC-134	VES-SRC-133	VES-SRC-134
SUMP TANK PUMP CAPACITY=40 GPM	CLARIFIER PUMP CAPACITY=40 GPM	SUMP TANK CAPACITY=3390 GAL MAWP=15 PSIG	CLARIFIER CAPACITY=490 GAL MAWP=15 PSIG

NOTES

1. SEE DRAWINGS 632756 AND 632757 FOR TYPICAL P&ID SYMBOLS.
2. LEVEL PROBES HAVE A 10" SEPARATION IN ORDER TO MEASURE DENSITY.
3. PNEUMATIC VALVES AND I/P ARE LOCATED OUTSIDE 4-PACK BOUNDARY WITH PNEUMATIC TUBING INTO CELL.
4. (P)IA SEE DETAILS ON DRAWINGS 632758 AND 634120 SHEET 17.
5. SINGLE HOSE CONNECTION.
6. DENOTES VALVES HAVING POSITION SWITCHES SHOWN IN "TYPICAL POSITION SWITCH" SKETCH ON DRAWING 632758.
7. SOLENOID VALVES LOCATED ON STND-SRC-620C.
8. LOCATE PHYSICALLY ABOVE TOP OF CLARIFIER OR SUMP TANK.

VES-SRC-133A
PULSATION DAMPENER

STND-SRC-620C

L-C 134-001 — LIT-SRC 134-001
D-C 134-001 — DIT-SRC 134-001
L-C 133-001 — LIT-SRC 133-001
D-C 133-001 — DIT-SRC 133-001

SEE NOTE 4 (P)IA
SEE NOTE 5

HIV-SRC-134-003
HIV-SRC-134-004
HIV-SRC-134-005
HIV-SRC-133-001
HIV-SRC-133-002
HIV-SRC-133-003
HIV-SRC-133-004
HIV-SRC-133-005
HIV-SRC-133-006
HIV-SRC-134-011
HIV-SRC-134-012
HIV-SRC-134-013
1"x1/2"

1"-HI-SE-160502-N
1"-HI-SE-160503-N
1"-HI-SE-160504-N

632760 FROM WASTE FEED TANK — 4"-HW-SJ-160014-N
632825 FROM NITRIC ACID — 1/2"-NA-SG-160496-N
632825 FROM NITRIC ACID — 1/2"-NA-SG-160495-N
632763 FROM PGF — 1 1/2"-HW-SJ-160261-N
632765 FROM OGF — 1 1/2"-HW-SJ-160258-N
632762 FROM DMR — 1 1/2"-HW-SJ-160032-N
633453 VENT — 4"-VN-SJ-160494-N
4"-VN-SJ-160497-N
2"x1 1/2"

1"-HI-SE-160300-N
1"-HI-SE-160301-N
1"-HI-SE-160302-N

4-PACK BOUNDARY

4"-HW-SJ-160490-N — 632821 DRAIN TO 4-PACK SUMP PIT

N1 N2 N3 N4 N5 N6 N7 N8 N9 N10 M1
6"
VES-SRC-134
VES-SRC-133
SPARGE
10"

HS-C-134-3
HS-C-134-4
HS-C-133-3
HS-C-133-4
HS-C-133-5
SEE NOTE 7 (S)
SEE NOTE 8
768705 IA
HV-SRC-134-003
HV-SRC-134-004
HV-SRC-134-007
HV-SRC-134-008
HV-SRC-134-009
HV-SRC-134-010
HV-SRC-134-001
HV-SRC-134-002
HV-SRC-133-001
HV-SRC-133-002
HV-SRC-133-003
HV-SRC-133-004
HV-SRC-133-005
HV-SRC-133-007
HV-SRC-133-008
HV-SRC-133-009
AIR DISCHARGE
P-SRC-134
P-SRC-133
1/2"-HI-SL-160500-N
1 1/2"-HW-SJ-160492-N
1 1/2"-HW-SJ-160491-N
1/2"-HI-SL-160499-N
1/2"-HI-SL-160501-N
1 1/2"-HW-SJ-160493-N
1 1/2"-HW-SJ-160739-N
632821
768705 AIR
632760 HS-C-231 WASTE FEED PUMP ON
VES-SRC-133A
SEE NOTE 6 HV-SRC 133-003
STND-SRC-620C

REVISION HISTORY

REV	DESCRIPTION

Idaho Cleanup Project Core — Fluor IDAHO

INTEC CPP-1696
INTEGRATED WASTE TREATMENT UNIT
PIPING AND INSTRUMENTATION DIAGRAM
SUMP TANK SYSTEM

SIGNATURES/DATES APPLY TO CURRENT RELEASE ONLY

	SIGN AND DATE
DESIGN: R. CAMPBELL	Rodney C. Campbell HuliariAscendent, Inc. 2017.08.14 08:53:11 -06'00'
DRAFTER: J. MONCUR	Jim Moncur Fluor Idaho 2017.08.10 15:29:47 -06'00'
TECHNICAL CHECK: Q. BLACKBURN	Quin T. Blackburn, P.E. Fluor Idaho 2017.08.14 09:59:11 -06'00'
ENG GROUP SUPERVISOR: R. EASTMAN, P.E.	Randy Eastman Fluor Idaho 2017.08.14 09:00:28 -06'00'
DESIGN LEAD/AUTHORITY: W. REED, P.E.	William H. Reed Fluor Idaho 2017.08.14 10:54:01 -06'00'
DRAFTING CHECK/ EFFECTIVE DATE: K. KELLER	Shawn Berthelson Fluor Idaho 2017.08.14 10:56:50 -06'00'

DESIGN PHASE:	FINAL
QUALITY LEVEL:	3
HORIZONTAL SCALE:	NONE
VERTICAL SCALE:	NA
FOR DRAWING INDEX SEE DRAWING NO.	632756
PROJECT NUMBER:	25051

INDEX CODE NUMBER			
AREA	TYPE	CI	ORIG
200	1696	28	286A

SIZE D — DWG- 632823 — REV
DRF NO. 355189 — SHEET 1 OF 1

FMT-DV-1-ICP REV 2017-02-28

File: 632823.dwg
Path: K:\D-Signoff\Checker Review\
User: Kris
Date: 08/09/17 - 9:54 AM
Layout Name: Layout1
ID: MXJ

INV: FMT-D1-REV 2016-08-02

REVISIONS	
REV	DESCRIPTION
1	SEE DRF-352535, TITLE CHANGE

NOTES:

1. REMOVE ALL BURRS AND SHARP EDGES.
2. ALL MACHINED FILLET RADII .03 MAXIMUM UNLESS OTHERWISE NOTED.
3. ALL WELDING SHALL BE IN ACCORDANCE WITH THE REQUIREMENTS OF ASME B&PV CODE SECTION IX FOR THE JOINING OF HAYNES 556 MATERIAL.
4. (Q) VISUALLY INSPECT FINAL PASS OF ALL WELDS. ACCEPTANCE CRITERIA SHALL BE:

   NO CRACKS.

   COMPLETE FUSION SHALL EXIST BETWEEN WELD METAL AND BASE METAL.

   UNDERCUT SHALL NOT EXCEED .01" FOR MATERIAL LESS THAN 3/16". FOR MATERIAL 3/16" AND THICKER, UNDERCUT NOT TO EXCEED 1/32".

   FOR ALL WELDS THE SUM OF VISIBLE POROSITY 1/32" OR GREATER IN DIAMETER SHALL NOT EXCEED 3/8" IN ANY LINEAR INCH OF WELD AND SHALL NOT EXCEED 3/4" IN ANY 12" LENGTH OF WELD.

   ALL CRATERS SHALL BE FILLED TO THE FULL CROSS-SECTION OF THE WELD EXCEPT FOR ENDS OF FILLET WELDS OUTSIDE THEIR EFFECTIVE LENGTH.

5. (Q) (△) LIQUID PENETRANT TESTING SHALL BE PERFORMED ON THE WELD SURFACE INTERNAL TO THE NOZZLE ON ALL PRESSURE BOUNDARY WELDS IN THE FINISHED CONDITION. ACCEPTANCE CRITERIA SHALL BE IN ACCORDANCE WITH ASME B&PV CODE SECTION VIII, APPENDIX 8, METHODS FOR LIQUID PENETRATION EXAMINATION (PT).
6. (△) ULTRASONIC TESTING USING THE LINEAR-PHASED ARRAY METHOD SHALL BE PERFORMED TO DETECT WELD DEFECTS AND CHARACTERIZE PLANAR DEFECTS PARALLEL TO THE WELDING DIRECTION. ACCEPTANCE CRITERIA SHALL BE IN ACCORDANCE WITH ASME B&PV CODE SECTION VIII, DIVISION 1, APPENDIX 12.
7. FINAL ASSEMBLY SHALL BE EXAMINED VISUALLY UNDER A CONCENTRATED LIGHT SOURCE. IT SHALL BE ACCEPTED AS CLEAN WHEN IT IS VISUALLY FREE FROM GREASE, CUTTING OILS, LOOSE PARTICLES, CHIPS AND OTHER MATERIALS NOT FORMING A PART OF THE FINISHED ITEM.
8. ESTIMATED WEIGHT: -0 ASSEMBLY 356 LBS.
   -3 ASSEMBLY 242 LBS.
9. ALL MATERIAL PROVIDED BY FABRICATOR MUST HAVE ACTUAL CERTIFIED MATERIAL TEST REPORTS (CMTR's) ISSUED BY THE ORIGINAL MANUFACTURER OR INDEPENDENT TESTING LABORATORY PERFORMING MATERIAL TESTING WHICH CERTIFIES THAT THE MATERIAL HAS BEEN INSPECTED AND TESTED IN ACCORDANCE WITH THE REQUIREMENTS OF THE SPECIFICATION AND THAT THE RESULTS OF THE CHEMICAL ANALYSES AND MECHANICAL TESTS MEET THE REQUIREMENTS OF THE SPECIFICATION FOR THE SPECIFIC GRADE. THE HEAT NUMBER SHALL BE MARKED ON THE CMTR's AND ON THE MATERIAL.
10. ALL MATERIAL PROVIDED BY FABRICATOR MUST HAVE ACTUAL CERTIFIED MATERIAL TEST REPORTS (CMTR's) ISSUED BY THE ORIGINAL MANUFACTURER OR INDEPENDENT TESTING LABORATORY PERFORMING MATERIAL TESTING WHICH CERTIFIES THAT THE MATERIAL HAS BEEN INSPECTED AND TESTED IN ACCORDANCE WITH THE REQUIREMENTS OF THE SPECIFICATION AND THAT THE RESULTS OF THE CHEMICAL ANALYSES MEET THE REQUIREMENTS OF THE SPECIFICATION FOR THE AWS MATERIAL CLASSIFICATION. EACH END OF CUT LENGTHS OF WELD FILLER METAL SHALL BE MARKED (OR MARK THE END OF THE SPOOLED WIRE) SHOWING THE AWS MATERIAL CLASSIFICATION AND HEAT NUMBER. THE HEAT NUMBER MUST APPEAR ON THE CMTR's.
11. (Q) (△) ITEM 1 SHALL BE ROLLED AND WELDED TO MEET THE REQUIREMENTS OF ASTM B619.
12. ALL DIMENSIONAL TOLERANCES PER ASME B16.5 AND ASME PCC-1 SHALL BE MET.

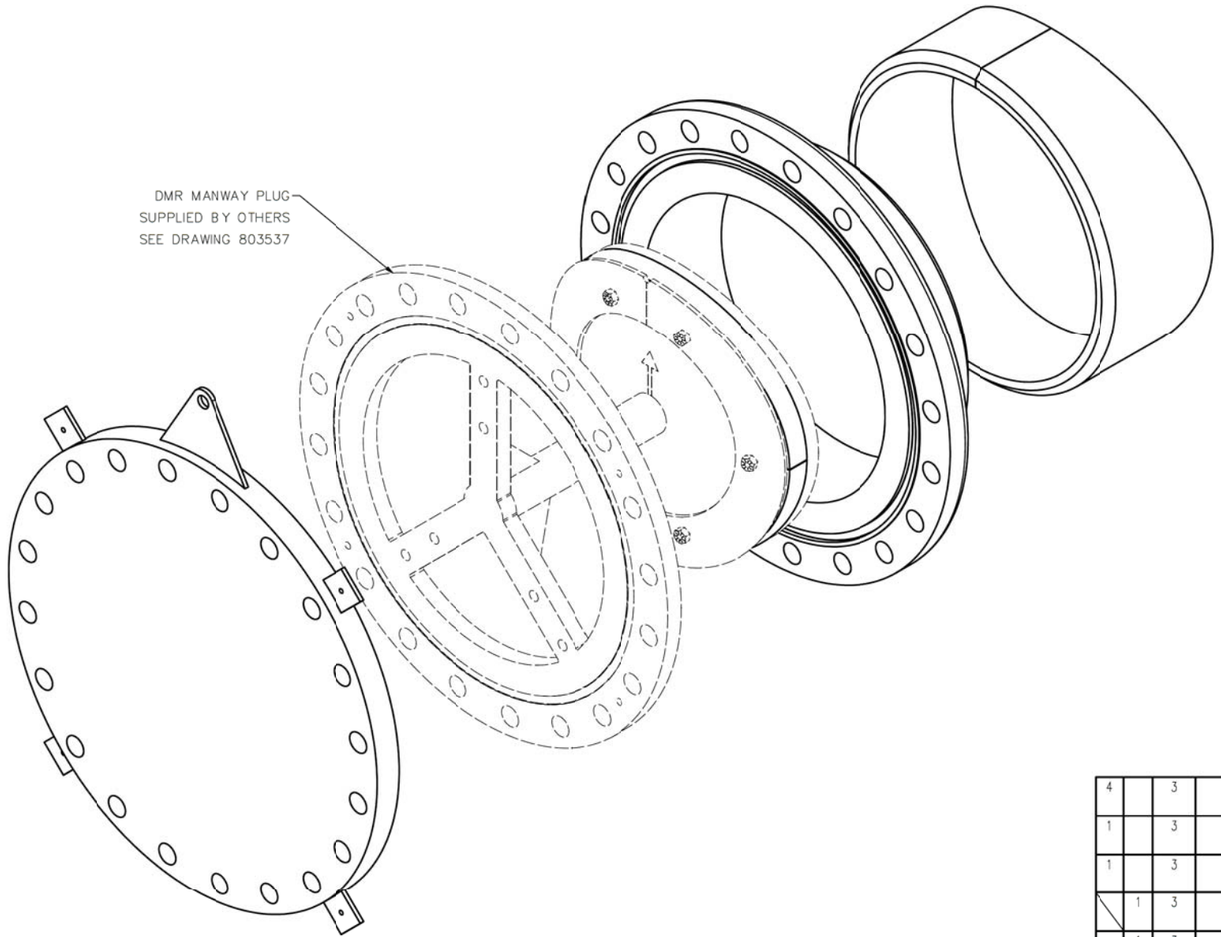

3D VIEW
(SHOWN FOR CLARITY)
SCALE: NONE

-3 QTY REQD	-0	QUAL LEVEL	PART OR IDENTIFYING NO.	NOMENCLATURE OR DESCRIPTION	MATERIAL/SPECIFICATION OR VENDOR NAME	ITEM NO.
4		3	-6	INSULATION ATTACHMENT TAB	PLATE, HAYNES 556 ASTM B435	6
1		3	-5	LIFTING TAB	PLATE, HAYNES 556 ASTM B435	5
1		3	-4	20" 150# RF BLIND FLANGE	ASME B16.5, HAYNES 556 ASTM B435	4
\	1	3	-3	BLIND FLANGE ASSEMBLY		3
	1	3	-2	20 INCH 150# RF WELD NECK FLANGE	ASME B16.5, HAYNES 556 ASTM B435	2
	1	3	-1	NOZZLE PIPE	PLATE, HAYNES 556 ASTM B435	1
	\	3	-0	ASSEMBLY		0

PARTS LIST

PROFESSIONAL ENGINEER LICENSED Nathan Seaver 20161**8888** 17:24:59 -07'00' STATE OF IDAHO NATHAN O. SEAVER

INSPECTION REQUIREMENTS	-0
QC REQUIRED	DASH NO. / NEXT ASSY
(Q) DENOTES Q/C INSP. REQD.	APPLICATION

DIMENSIONING AND SYMBOLOGY PER ASME Y14.5-2009 AND STD-11
UNLESS OTHERWISE SPECIFIED
SURFACE ROUGHNESS 125
DIMENSIONS AND TOLERANCES ARE IN INCHES
TOLERANCES .X ± .1
DECIMALS .XX ± .03
.XXX ± .010
FRACTIONS ± 1/8
ANGULAR ± 2°
DO NOT SCALE DRAWING

SIGNATURES/DATES APPLY TO CURRENT RELEASE ONLY — SIGN AND DATE

DESIGN:	N. SEAVER, P.E.	Nathan Seaver, Welsh Engineering Services, 2016.12.20 17:24:44 -07'00'
DRAFTER:	T. ROMRIELL	T.J. Romriell, Portage, 2016.12.19 17:47:06 -07'00'
TECHNICAL CHECK:	J. KLINGER, P.E.	Jeff Klinger, Fluor Idaho, 2016.12.21 07:15:22 -07'00'
ENG GROUP SUPERVISOR:	R. EASTMAN, P.E.	Randy Eastman, Fluor Idaho, 2016.12.20 15:39:17 -07'00'
DESIGN LEAD/AUTHORITY:	R. FARNSWORTH	Richard K. Farnsworth, Fluor-Idaho, 2016.12.21 07:19:03 -07'00'
DRAFTING CHECK/ EFFECTIVE DATE:	K. KELLER	Kris Keller, Fluor Idaho, 2016.12.21 07:33:00 -07'00'
PROJECT NUMBER:	25051	
DRF NUMBER:	351839	

Idaho Cleanup Project — Fluor IDAHO

INTEC CPP-1696
INTEGRATED WASTE TREATMENT UNIT
DMR VESSEL MANWAY
NOZZLE ASSEMBLY

SIZE	INDEX CODE NUMBER AREA	TYPE	CIL	ORG	DWG-	REV
D	200	1696	47	286A	804020	1

SCALE: NOTED — SHEET 1 OF 3

ID: romrij
Layout Name:
File: 804020.dwg
Path: V:\Vault\Designs\WTP\DMR\DMR MANWAY\804020.dwg

INV. FMT-D1-REV 2016-08-02

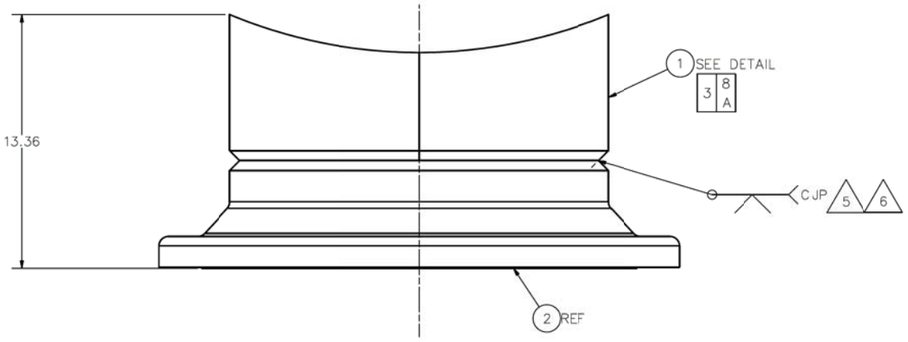

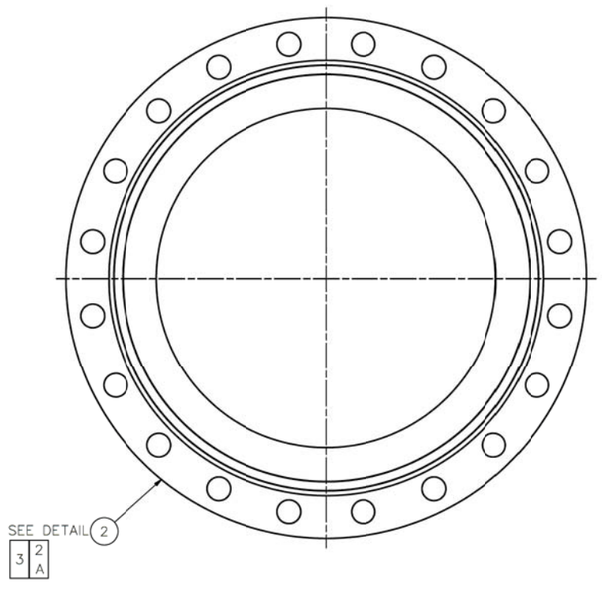

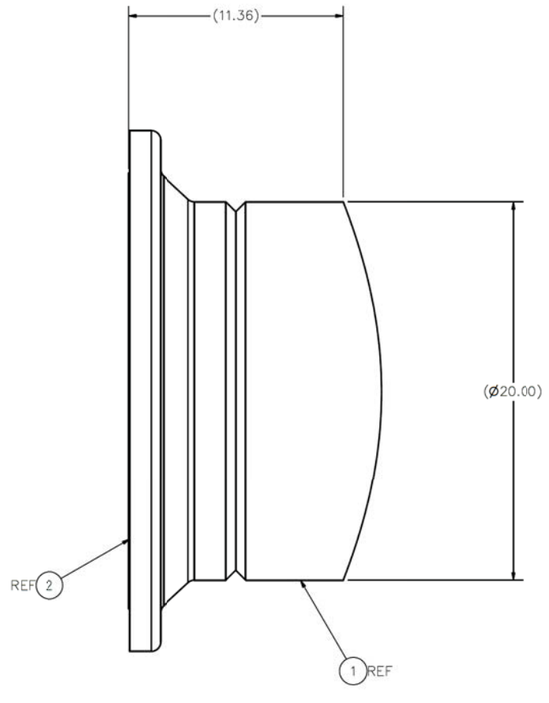

−0 ASSEMBLY
SCALE: 1/4

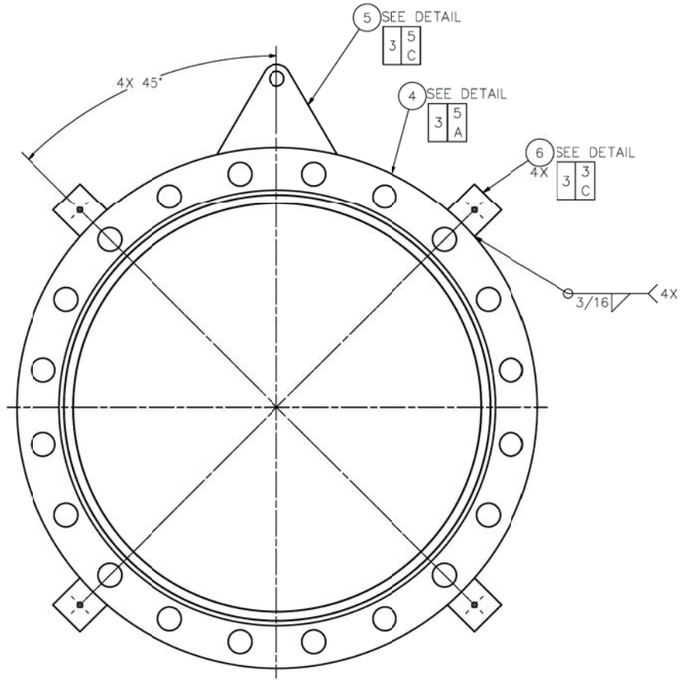

− 3 ASSEMBLY
SCALE: 1 / 4

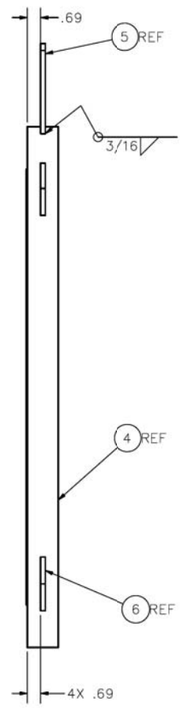

SIZE	INDEX CODE NUMBER				DWG-	REV
	AREA	TYPE	CL	ORIG	804020	1
D	200	1696	47	286A		
SCALE: NOTED					SHEET 2	

File: 804020.dwg
Path: V:_Vault\Designs\WTD\DWG\DWG_MANWAY\804020.dwg
Layout Name:
ID: romrtj

INV. FMT-D1-REV 2016-08-02

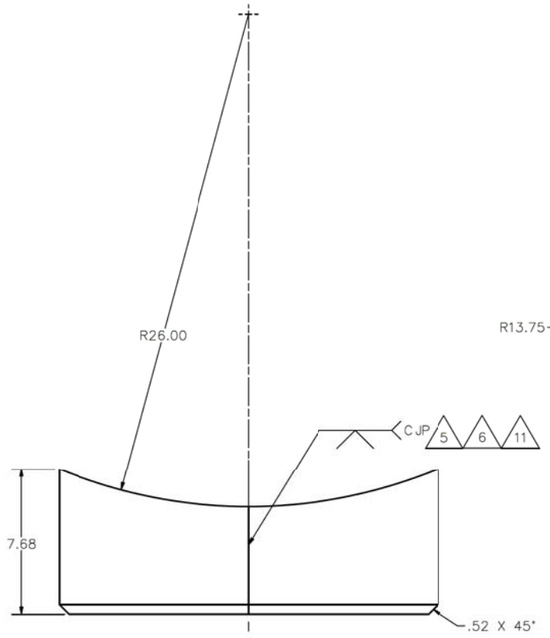

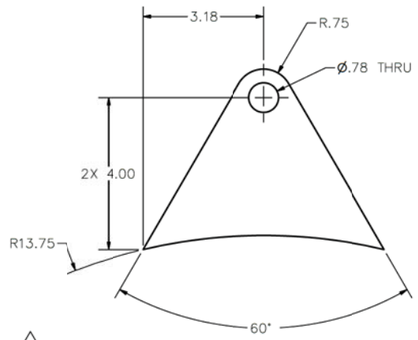

5 DETAIL
SCALE: 1/2

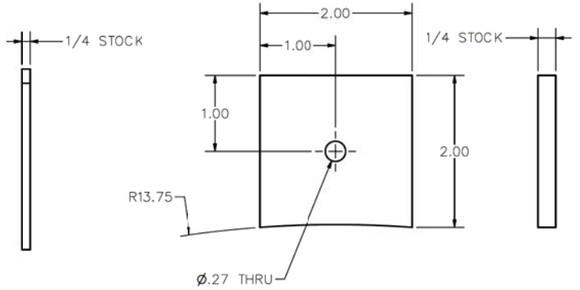

6 DETAIL
SCALE: 1/1

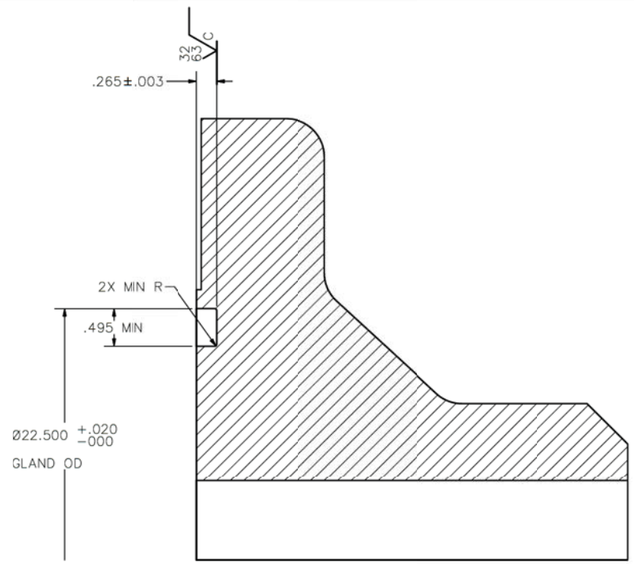

SECTION D–D
SCALE: 1/1

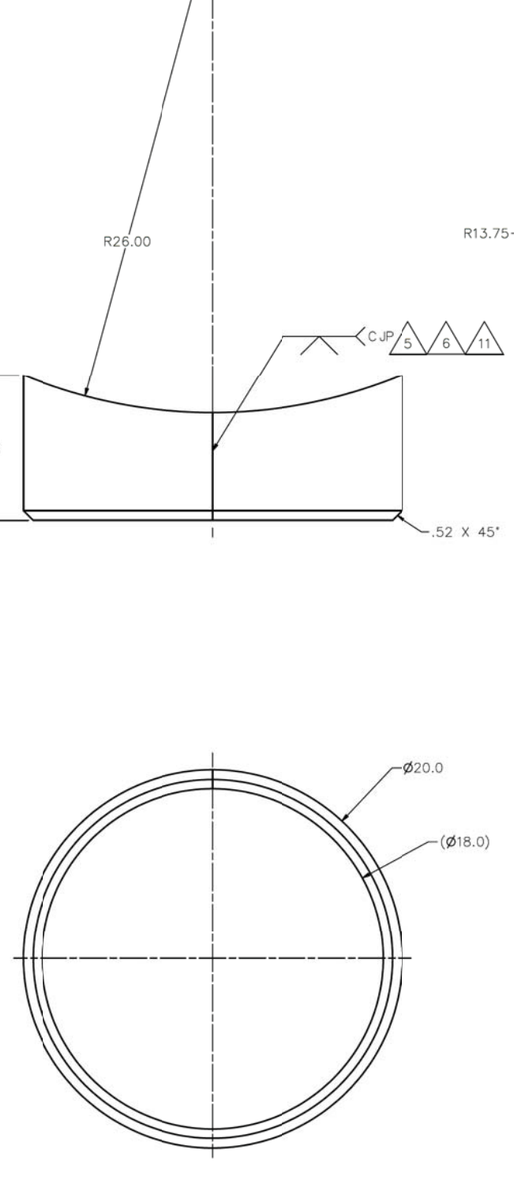

1 DETAIL
SCALE: 1/4

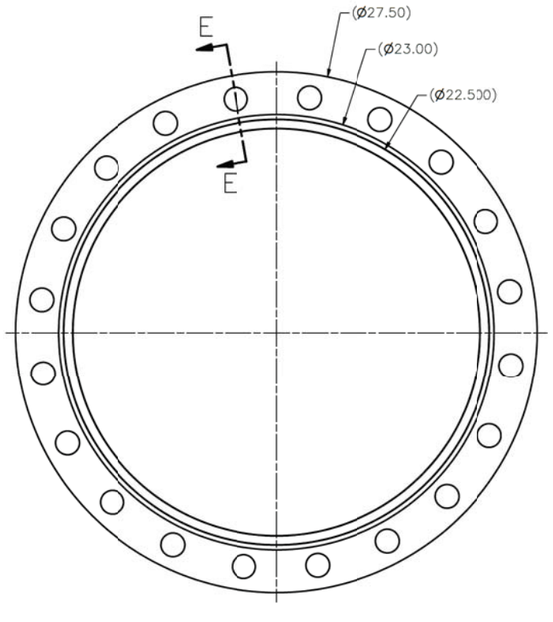

4 DETAIL
SCALE: 1/4

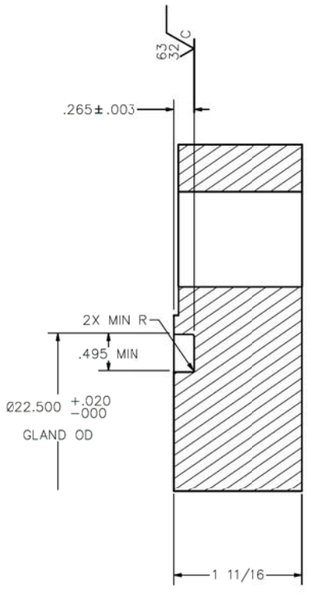

SECTION E–E
SCALE: 1/1

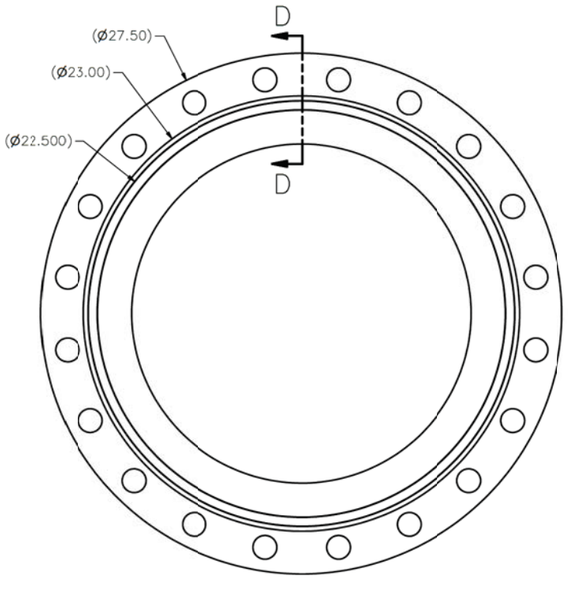

2 DETAIL
SCALE: 1/4

SIZE	INDEX CODE NUMBER				DWG-	REV
	AREA	TYPE	CL	ORIG		
D	200	1696	47	286A	804020	1
SCALE: NOTED					SHEET 3	

File: 804020.dwg
Path: V:_Vault\Designs\WTD\DWG\DWG_MANWAY\804020.dwg
Layout Name:
ID: romrj

INV: FMT-D1-REV 2017-02-28

REVISIONS	
REV	DESCRIPTION

NOTES:

1. REMOVE ALL BURRS AND SHARP EDGES.
2. WELDING SHALL BE IN ACCORDANCE WITH INL WELD PROCEDURES S 2.24, S 3.16 OR S 6.13, USING WELD FILLER METAL, ITEM 10.
3. (Q) VISUALLY INSPECT ALL WELDS IN ACCORDANCE WITH TPR-4981 APPENDIX K.
4. (Q) FINAL ASSEMBLY SHALL MEET CLEANLINESS REQUIREMENTS OF STD-7022, LEVEL D.
5. (Q) LIQUID PENETRANT EXAMINATION SHALL BE PERFORMED ON ITEMS 4, 5 AND 9 WELDS IN ACCORDANCE WITH TPR-4975, APPENDIX G.
6. LEVEL CLARIFIER TO TANK USING SHIM PLATES AS NECESSARY.
7. LUBRICATE FLANGE BOLT/NUT THREADS WITH ANTISEIZE COMPOUND (BOSTIK NEVER-SEEZ), TORQUE TO 60-80 FT-LBS.
8. LUBRICATE SUMP TANK FIXED END ANCHOR STUD/NUT THREADS WITH ANTISEIZE COMPOUND (BOSTIK NEVER-SEEZ), TORQUE TO 275-325 FT-LBS.
9. LUBRICATE SUMP TANK SLOTTED END ANCHOR STUD/NUT THREADS WITH ANTISEIZE COMPOUND (BOSTIK NEVER-SEEZ), TIGHTEN HAND TIGHT.

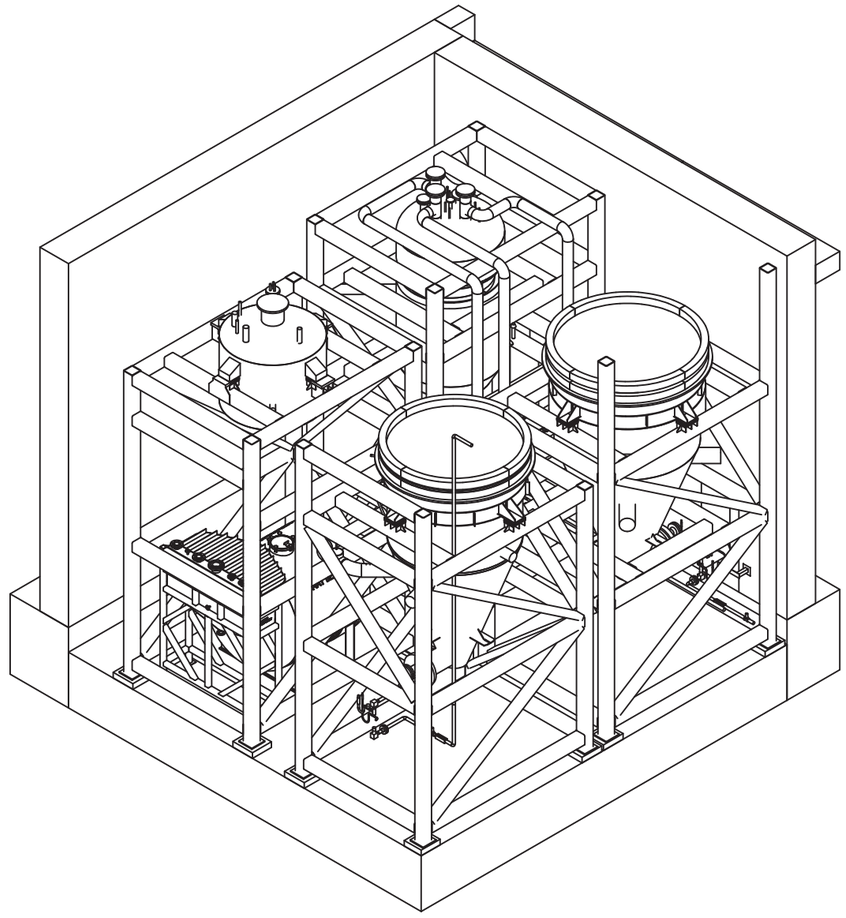

3D VIEW
(SHOWN FOR CLARITY)
SCALE: NONE

FLANGE NUT TABLE (7)				
QTY	NOZZLE SIZE	CLASS	SIZE	MATERIAL/SIZE
8	2"	300	HEAVY HEX, 5/8-11 UNC-2B	ASTM A194 GRADE 8

FLANGE BOLT TABLE (7)					
QTY	NOZZLE SIZE	CLASS	SIZE	LENGTH	MATERIAL/SIZE
8	2"	300	5/8-11 UNC-2A	3.5	ASTM A320 GRADE B8 CLASS 2

FLANGE GASKET TABLE				
QTY	NOZZLE SIZE	DESCRIPTION	MATERIAL	VENDOR
1	2"	GASKET, FLEXITALLIC STYLE CGI, SPIRAL WOUND, 2" CLASS 300, ASME B16.20, WINDING 304SST/FLEXIBLE GRAPHITE, OUTER 304SST, INNER 304SST	304 SST, FLEXICARB	FLEXITALLIC, L.P.

QTY REQD	QUAL LEVEL	PART OR IDENTIFYING NO.	NOMENCLATURE OR DESCRIPTION	MATERIAL/SPECIFICATION OR VENDOR NAME	ITEM NO.
	AR	3	WELD FILLER METAL	ER 308 OR 308L AWS A 5.9, A 5.4	10
1	3	-9	TANK PLATE, OPPOSITE END	PLATE, 304/304L SST ASTM A240	9
6	3		NUT, HEAVY HEX 1 1/4-7 UNC-2B	SST ASTM A194 GR 8	8
6	3		WASHER, PLAIN 1 1/4, TYPE B	304 SST	7
6	3		BOLT, STUD 1 1/4-7 UNC-2A X 4 LG	304 SST ASTM A320 GR B8 CLASS 2	6
1	3	-5	CLARIFIER PLATE	PLATE, 304/304L SST ASTM A240	5
1	3	-4	TANK PLATE, CLARIFIER END	PLATE, 304/304L SST ASTM A240	4
1	3	808193-1	CLARIFIER		3
1	3	808191-1	SUMP TANK		2
1	3		4 PACK		1
		-0	ASSEMBLY		0

PARTS LIST

INSPECTION REQUIREMENTS	-0	FINAL
QC REQUIRED (Q) DENOTES Q/C INSP. REQD.	DASH NO.	NEXT ASSY
		APPLICATION

DIMENSIONING AND SYMBOLOGY PER ASME Y14.5-2009 AND STD-11
UNLESS OTHERWISE SPECIFIED
SURFACE ROUGHNESS 125
DIMENSIONS AND TOLERANCES ARE IN INCHES
TOLERANCES .X ±.1
DECIMALS .XX ±.03
.XXX ±.010
FRACTIONS ±1/8
ANGULAR ±2°
DO NOT SCALE DRAWING

SIGNATURES/DATES APPLY TO CURRENT RELEASE ONLY — SIGN AND DATE

DESIGN: R. CAMPBELL	Rodney C. Campbell, HukariAscendent, Inc., 2017.07.05 12:50:14 -06'00'
DRAFTER: M. PENNINGTON	Matt Pennington, Walsh Engineering Services, LLC, 2017.07.05 08:45:36 -06'00'
TECHNICAL CHECK: M. CHADEK, P.E.	Randy Eastman, Fluor Idaho, 2017.07.06 11:29:19 -06'00'
ENG GROUP SUPERVISOR: R. EASTMAN, P.E.	Randy Eastman, Fluor Idaho, 2017.07.06 08:43:23 -06'00'
DESIGN LEAD/AUTHORITY: J. KLINGER, P.E.	Jeff Klinger, Fluor Idaho, 2017.07.05 17:01:15 -06'00'
DRAFTING CHECK/ EFFECTIVE DATE: K. KELLER	Kris Keller, Fluor Idaho, 2017.07.06 12:12:12 -06'00'
PROJECT NUMBER: 25051	
DRF NUMBER: 355054	

Idaho Cleanup Project Core — Fluor IDAHO

INTEC CPP-1696
INTEGRATED WASTE TREATMENT UNIT
4-PACK SUMP TANK
ASSEMBLY

SIZE	INDEX CODE NUMBER (AREA / TYPE / ICL / ORIG)	DWG-	REV
D	200 / 1696 / 40 / 286A	808190	
SCALE: NOTED		SHEET 1 OF 3	

File: 808190 4-PACK WITH SUMP TANK.dwg
Path: C:\VAULT\Projects\INL\FLUOR\WTU\WASTE FEED SUMP TANK\808190 4-PACK WITH SUMP TANK.dwg | Layout Name: 1 of 3 | Saved By: matt.pennington on 7/6/2017 - 08:36:45 | ID: matt.pennington

INV: FMT-D1-REV 2017-02-28

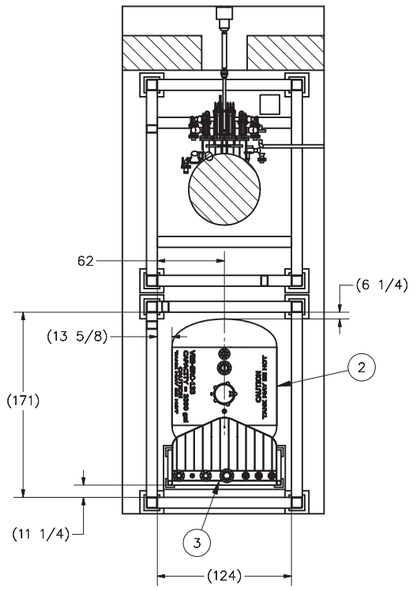

SECTION A–A

SCALE: 1/70

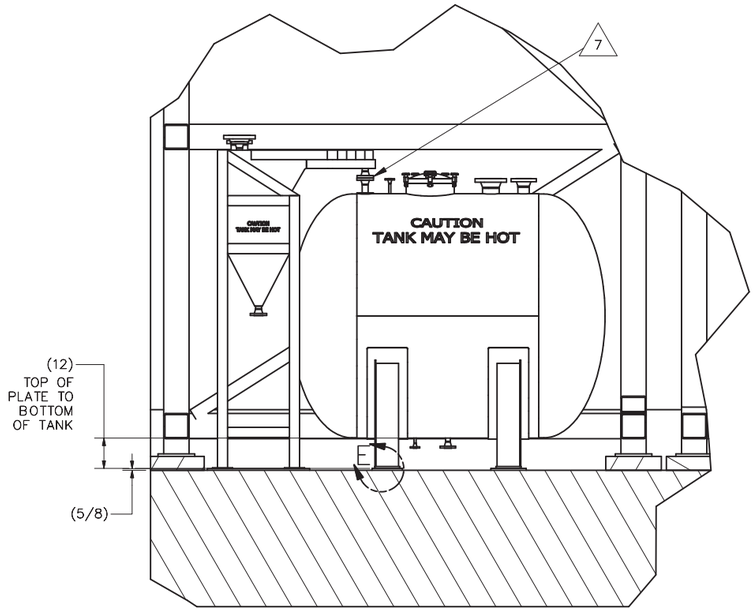

VIEW C

SCALE: 1/30

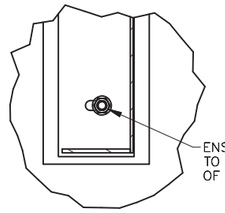

ENSURE STUDS ARE ALIGNED TO THE OUTER–MOST EDGE OF THE SADDLE SLOTS.

VIEW F

SCALE: 1/10

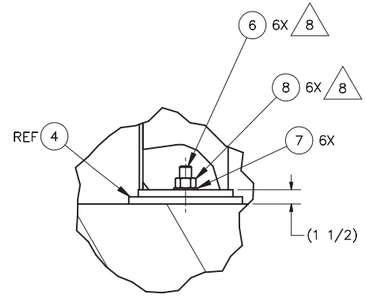

VIEW E

SCALE: 1/8

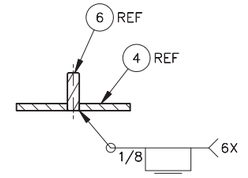

SECTION G–G

SCALE: 1/8

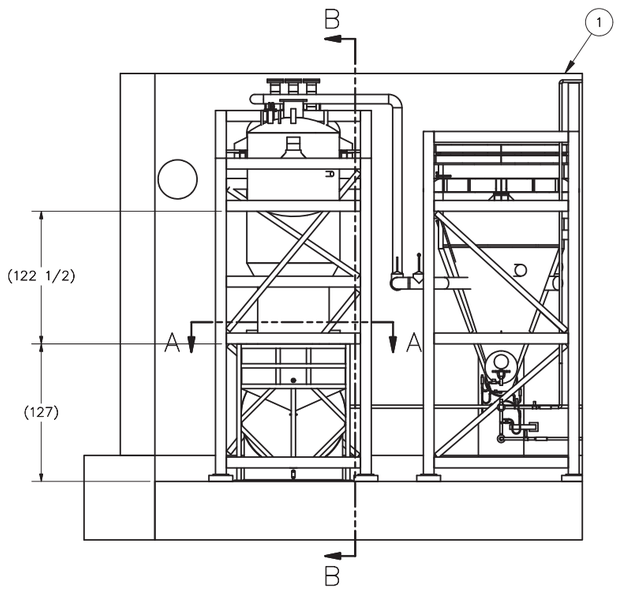

–0 ASSEMBLY

SCALE: 1/70

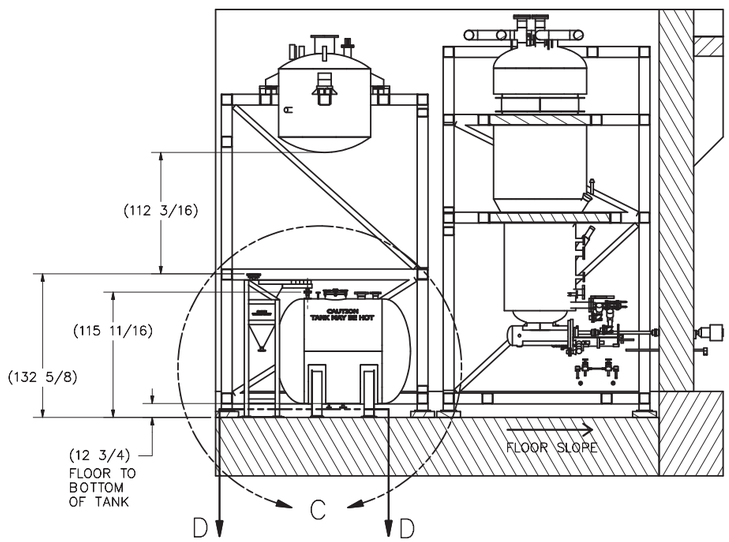

SECTION B–B

SCALE: 1/70

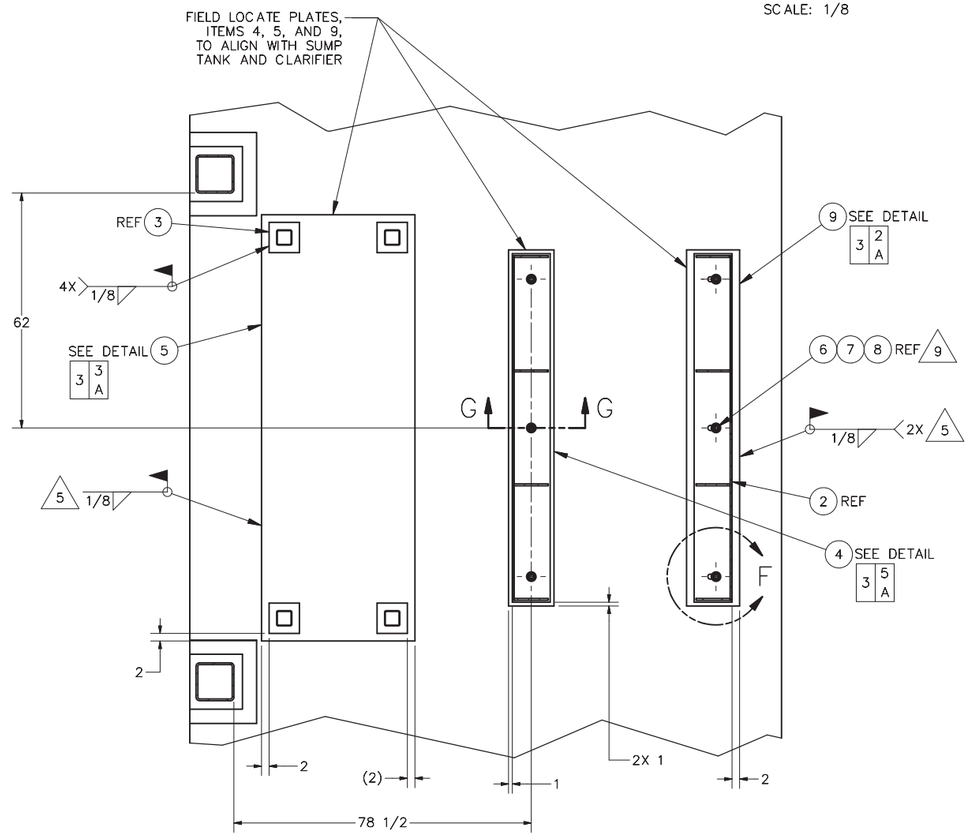

SECTION D–D

SCALE: 1/20

SIZE	INDEX CODE NUMBER				DWG-	REV
	AREA	TYPE	CL	ORIG		
D	200	1696	40	286A	808190	
SCALE: NOTED					SHEET 2	

File: 808190 4-PACK WITH SUMP TANK.dwg
Path: C:\VAULT\Projects\INL\FLUOR\WTU\WASTE FEED SUMP TANK\808190 4-PACK WITH SUMP TANK.dwg
Layout Name: 2 of 3
ID: matt.pennington

INV: FMT-D1-REV 2017-02-28

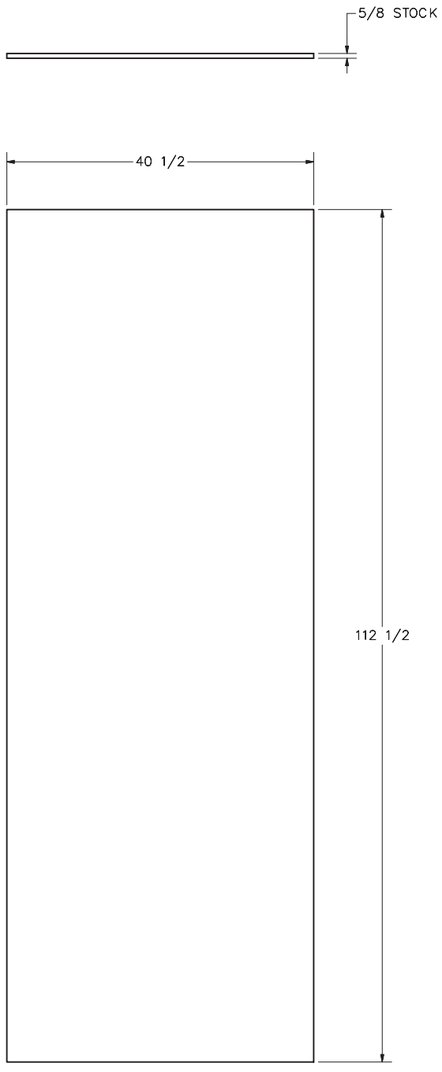

5 DETAIL
SCALE: 1/10

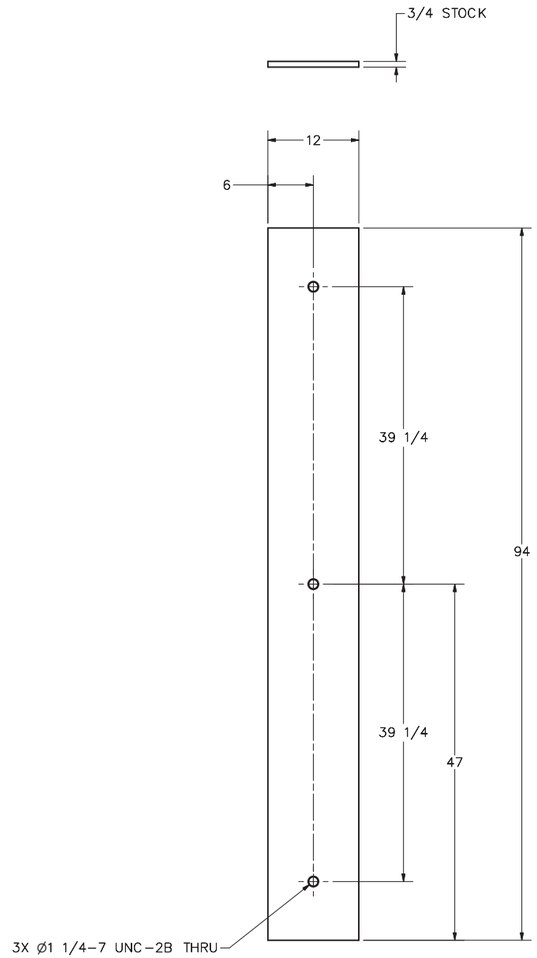

4 DETAIL
SCALE: 1/10

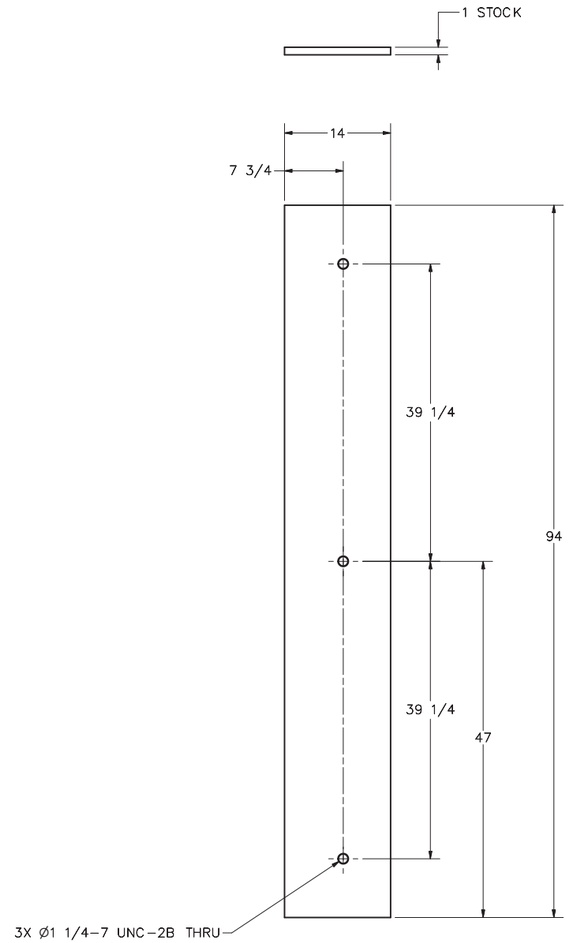

9 DETAIL
SCALE: 1/10

SIZE	INDEX CODE NUMBER				DWG-	REV
	AREA	TYPE	CL	ORIG		
D	200	1696	40	286A	808190	
SCALE: NOTED					SHEET 3	

File: 808190 4-PACK WITH SUMP.dwg
Path: C:\VAULT Projects\INA FLUOR WTU\WASTE FEED SUMP TANK\808190 4-PACK WITH SUMP TANK.dwg
Layout Name: 3 of 3
ID: matt.pennington

INV: FMT-D1-REV 2017-02-28

NOTES:

1. REMOVE ALL BURRS AND SHARP EDGES.
2. ALL MACHINED FILLET RADII .03 MAXIMUM UNLESS OTHERWISE NOTED.
3. WELDING SHALL BE IN ACCORDANCE WITH ASME B & PV CODE SECTION IX (2010). (INL WELD PROCEDURES S 2.0 OR S 6.9), USING WELD FILLER METAL, ITEM 25.
4. (Q) VISUALLY INSPECT ALL WELDS IN ACCORDANCE WITH ASME B & PV CODE, SECTION V, ARTICLE 9 (2013). ACCEPTANCE SHALL BE IN ACCORDANCE WITH ASME B & PV CODE, SECTION VIII, DIVISION 1, PART UW-35 AND 36 (2013) (TPR-4981 APPENDIX B).
5. (Q) FINAL ASSEMBLY SHALL MEET CLEANLINESS REQUIREMENTS OF STD-7022, LEVEL D.
6. MARK PER STD-7006-2A OR STD-7006-2D IN 5" HIGH CHARACTERS WITH VESSEL ID, CAPACITY AND "CAUTION TANK MAY BE HOT". LOCATE APPROXIMATELY WHERE SHOWN. FILL CHARACTERS WITH SANFORD T.E.C. MARKER #13401 OR #13501, ITW DYMON FORMULA Q404 INK OR OTHER HIGH-PURITY LOW-CHLORIDE BLACK INK THAT COMPLIES WITH ASTM C1217-00 OR RDT F7-3T. DO NOT APPLY VARNISH OVER MARKING.
7. (Q) VERIFY MARKINGS HAVE BEEN ACCURATELY APPLIED.
8. ESTIMATED EMPTY WEIGHT 5,555 LBS.
9. SEE DATA SHEET NO. 1568 FOR DESIGN INFORMATION.
10. FOR INSTALLATION SECTIONS SEE VIEW THIS SHEET, SEE DRAWING 808190 FOR INSTALLATION.
11. (Q) LIQUID PENETRANT EXAMINATION SHALL BE PERFORMED ON ALL WELDS IN ACCORDANCE WITH ASME B & PV CODE, SECTION V (2013), ARTICLE 6. ACCEPTANCE SHALL BE IN ACCORDANCE WITH ASME B & PV CODE, SECTION VIII, DIVISION 1, MANDATORY APPENDIX 8 (2013) (TPR-4975, APPENDIX G).
12. (Q) COMPLETED VESSEL SHALL UNDERGO A HYDROSTATIC LEAK TEST AT A PRESSURE OF 13.8 TO 14.8 PSIG. INSPECT ALL CONNECTIONS AND WELD JOINTS FOR LEAKS, MAINTAIN PRESSURE FOR 4 HOURS. ACCEPTANCE CRITERIA: NO LEAKS.
13. SUMP TANK VES-SRC-133 DOES NOT FALL WITHIN ASME B & PV, SECTION VIII CODE REQUIREMENTS. HOWEVER THE TANK HAS BEEN DESIGNED IN ACCORDANCE WITH THE B & PV CODE AS A BEST ENGINEERING PRACTICE, SEE EA-TOR 3.03-001 FOR ANALYSIS.
14. PRIOR TO FIELD WELDING, PREPARE SHELL WALLS, ITEM 3, WITH A 3:1 TAPER TO MATCH THE THICKNESS OF TANK HEADS, ITEM 4.
15. INSTALL SADDLE WITH SLOTS, ITEM 11 AS SHOWN, OPPOSITE END OF CLARIFIER INLET FLANGE, N1.
16. MAY BE FABRICATED IN SECTIONS USING FULL PENETRATION WELDS, PER NOTE 3.
17. SEE QLD NUMBER 5516 FOR QUALITY LEVEL DETERMINATION.
18. ALL FLANGE BOLT HOLES TO STRADDLE VESSEL CENTERLINE.
19. SEE FCF NO. 8759 FOR DESIGN CRITERIA.

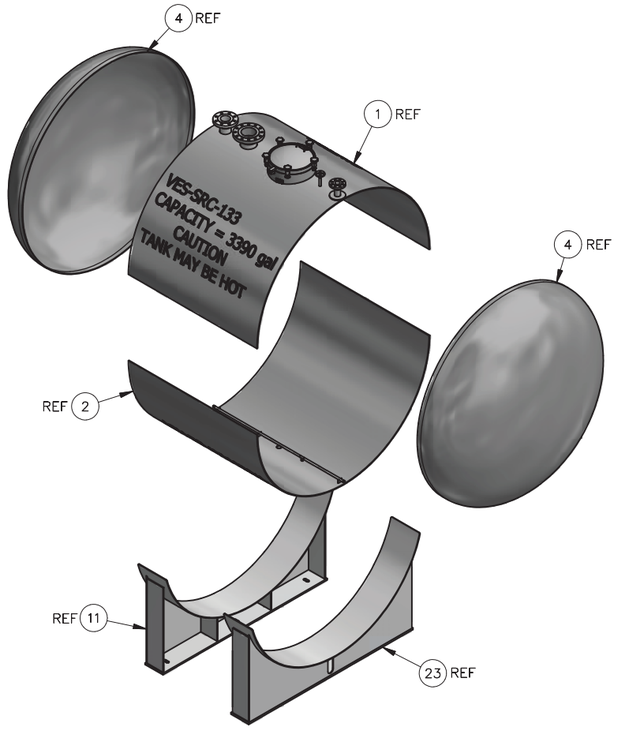

INSTALLATION SECTIONS
3D VIEW
(SHOWN FOR CLARITY)
SCALE: NONE

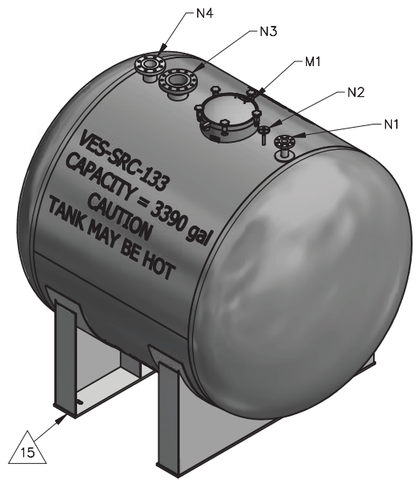

3D VIEW
(SHOWN FOR CLARITY)
SCALE: NONE

REVISIONS	
REV	DESCRIPTION

	1		3	9822881	O-RING FOR 18" MANWAY MC-56	PAUL MUELLER WHITE VITON	26
AR	AR	AR	3		WELD FILLER METAL	ER 308 OR 308L AWS A 5.9, A 5.4 / ASME SFA 5.4 / 5.9	25
	1		3	-24	N1 RE-PAD	PLATE, 304/304L ASTM A240	24
		1	3	808192-1	SADDLE, WITH HOLES		23
	1		3		N3, WELD NECK FLANGE 6 CLASS 300, RF SCHED 40S BORE	ASTM A182-F304L, ASME B16.5	22
	1		3	-21	N3 NOZZLE NECK,	PIPE, SEAMLESS ASTM A312 GRADE TP304L	21
3			3	-20	SPARGE SADDLE	PLATE, 304/304L ASTM A240	20
1	1		3		N2, N5, WELD NECK FLANGE 1/2 CLASS 300, RF SCHED 80S BORE	ASTM A182-F304L, ASME B16.5	19
	1		3	-18	N2 NOZZLE NECK,	PIPE, SEAMLESS ASTM A312 GRADE TP304L	18
2			3		CAP, BW 1/2 SCHED 40S	ASTM A403 GRADE WP304L	17
1			3	-16	SPARGE, SHORT	PIPE, SEAMLESS ASTM A312 GRADE TP304L	16
1			3	-15	SPARGE, LONG	PIPE, SEAMLESS ASTM A312 GRADE TP304L	15
1			3		TEE, BW 1/2 SCHED 40S	ASTM A403 GRADE WP304L	14
1			3	-13	N5 NOZZLE NECK,	PIPE, SEAMLESS ASTM A312 GRADE TP304L	13
	1		3	MC-56 18"	MANWAY, M1	PAUL MUELLER 316/316L	12
		1	3	808192-0	SADDLE, SLOTTED		11
1			3	-10	N6 NOZZLE NECK,	PIPE, SEAMLESS ASTM A312 GRADE TP304L	10
1			3		N6, WELD NECK FLANGE 1 1/2 CLASS 300, RF SCHED 40S BORE	ASTM A182-F304L, ASME B16.5	9
	1		3	-8	N1 NOZZLE NECK,	PIPE, SEAMLESS ASTM A312 GRADE TP304L	8
	1		3		N1, WELD NECK FLANGE 2 CLASS 300, RF SCHED 160S BORE	ASTM A182-F304L, ASME B16.5	7
	1		3	-6	N4 NOZZLE NECK,	PIPE, SEAMLESS ASTM A312 GRADE TP304L	6
	1		3		N4, WELD NECK FLANGE 4 CLASS 300, RF SCHED 40S BORE	ASTM A182-F304L, ASME B16.5	5
		2	3	-4	HEAD, 1/4 NOMINAL X 96 I.D. ASME 2:1 ELLIPTICAL W/ 2 S.F.	PLATE, 304/304L ASTM A240	4
1	1		3	-3	TANK WALL	PLATE, 304/304L ASTM A240	3
		1	3	-2	BOTTOM TANK ASSEMBLY		2
		1	3	-1	TOP TANK ASSEMBLY		1
			3	-0	ASSEMBLY		0
-2	-1	-0	QUAL LEVEL	PART OR IDENTIFYING NO.	NOMENCLATURE OR DESCRIPTION	MATERIAL/SPECIFICATION OR VENDOR NAME	ITEM NO.
QTY REQD							

PARTS LIST

NOZZLE TABLE				
NOZZLE	DESCRIPTION	SIZE	SCHEDULE	FLANGE TYPE
N1	CLARIFIER INLET	2"	160S	WELD NECK, RF CLASS 300
N2	NITRIC ACID	1/2"	80S	WELD NECK, RF CLASS 300
N3	INSTUMENTS	6"	40S	WELD NECK, RF CLASS 300
N4	OVERFLOW	4"	40S	WELD NECK, RF CLASS 300
N5	AIR	1/2"	80S	WELD NECK, RF CLASS 300
N6	DRAIN	1 1/2"	40S	WELD NECK, RF CLASS 300
M1	MANWAY	18"	NA	NA

INSPECTION REQUIREMENTS	-0	808190
QC REQUIRED	DASH NO.	NEXT ASSY
(Q) DENOTES Q/C INSP. REQD.	APPLICATION	

DIMENSIONING AND SYMBOLOGY PER ASME Y14.5-2009 AND STD-11

UNLESS OTHERWISE SPECIFIED

SURFACE ROUGHNESS 125

DIMENSIONS AND TOLERANCES ARE IN INCHES

TOLERANCES .X ±.1
DECIMALS .XX ±.03
.XXX ±.010
FRACTIONS ±1/8
ANGULAR ±2°

DO NOT SCALE DRAWING

SIGNATURES/DATES APPLY TO CURRENT RELEASE ONLY	SIGN AND DATE
DESIGN: R. CAMPBELL	Rodney C. Campbell HukariAscendent, Inc. 2017.06.15 08:19:46 -06'00'
DRAFTER: M. PENNINGTON	Matt.Pennington Matthew Pennington 2017.06.15 07:19:29 -06'00'
TECHNICAL CHECK: M. CHADEK, P.E.	Mark Chadek Fluor Idaho 2017.06.15 09:28:11 -06'00'
ENG GROUP SUPERVISOR: R. EASTMAN, P.E.	Randy Eastman Fluor Idaho 2017.06.15 08:02:28 -06'00'
DESIGN LEAD/AUTHORITY: J. KLINGER, P.E.	Jeff Klinger Fluor Idaho 2017.06.15 15:47:10 -06'00'
DRAFTING CHECK/ EFFECTIVE DATE: K. KELLER	Kris Keller Fluor Idaho 2017.06.19 18:09:45 -06'00'
PROJECT NUMBER: 25051	
DRF NUMBER: 354736	

Idaho Cleanup Project Core — Fluor IDAHO

INTEC CPP-1696
INTEGRATED WASTE TREATMENT UNIT
4-PACK SUMP TANK
VES-SRC-133
ASSEMBLY

SIZE	INDEX CODE NUMBER				DWG-	REV
	AREA	TYPE	CL	ORIG		
D	200	1696	40	286A	808191	

SCALE: NOTED — SHEET 1 OF 6

File: 808191 WASTE FEED SUMP TANK.dwg
Path: C:\VAULT\Projects\INL\FLUOR\WTU\WASTE FEED SUMP TANK\808191 WASTE FEED SUMP TANK.dwg
Layout Name: 1 of 6 | ID: matt.pennington
Plotted: 19 Jun 2017 - 06:45:58

INV: FMT-D1-REV 2017-02-28

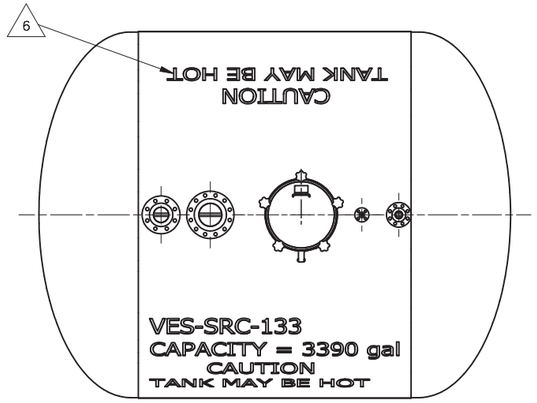

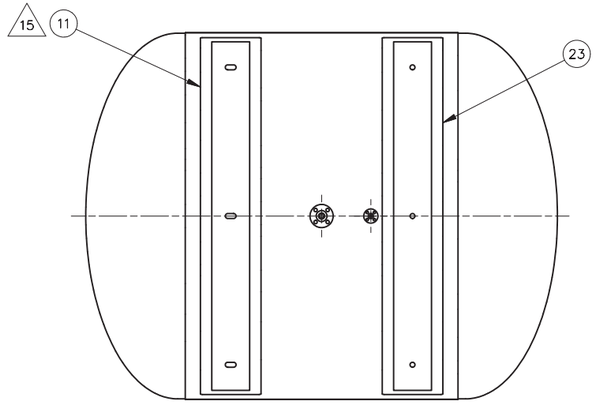

VIEW A–A

SCALE: 1/20

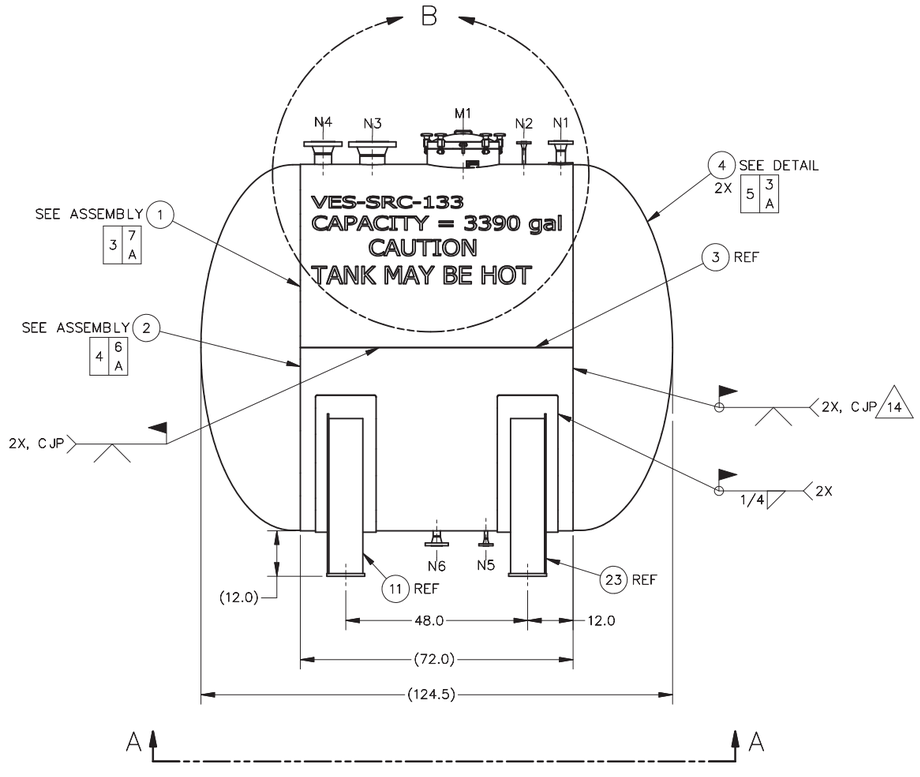

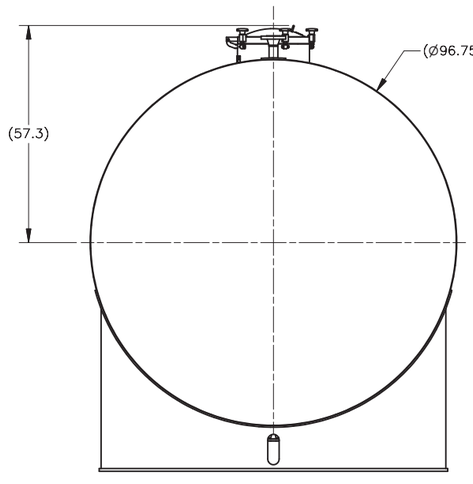

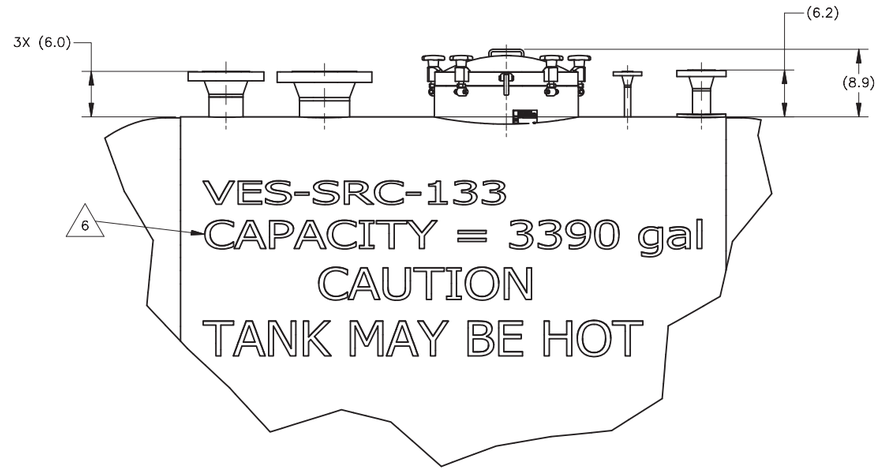

VIEW B

SCALE: 1/10

–0 ASSEMBLY

SCALE: 1/20

File: 808191 WASTE FEED SUMP TANK.dwg
Path: C:\VAULT Projects\INK FLUOR\WTU\WASTE FEED SUMP TANK\808191 WASTE FEED SUMP TANK.dgn
Layout Name: 2 of 6
ID: matt.pennington
5/9/2017 – 06:45:58

SIZE	INDEX CODE NUMBER				DWG–	REV
	AREA	TYPE	CL	ORIG		
D	200	1696	40	286A	808191	
SCALE: NOTED					SHEET 2	

INV: FMT-D1-REV 2017-02-28

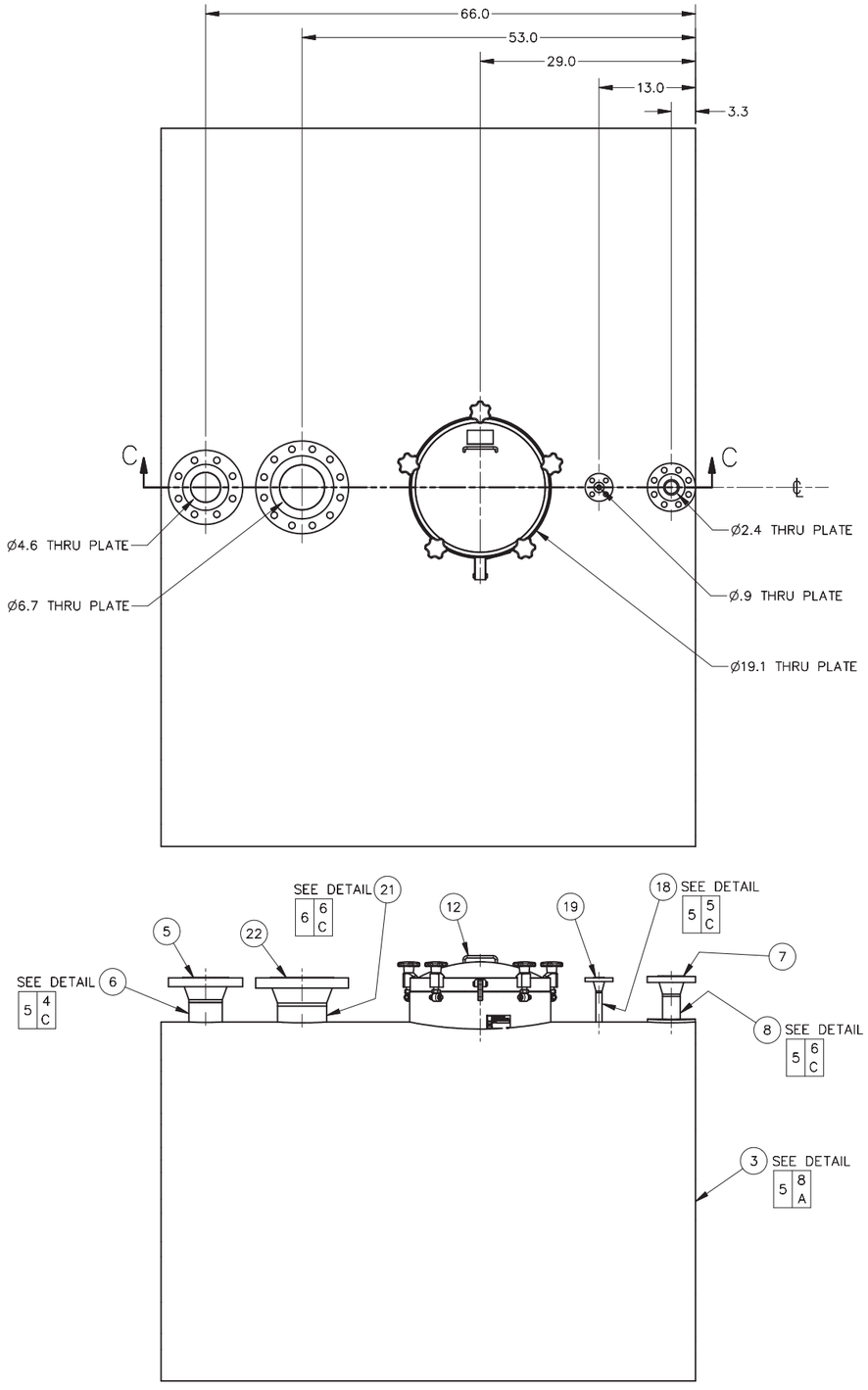

– 1 ASSEMBLY (ESTIMATED WEIGHT 1356 LBS)

SCALE: 1/10

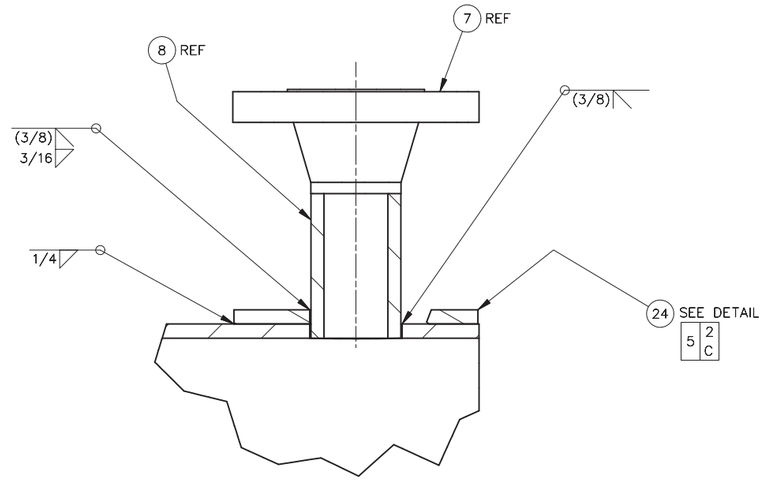

VIEW D

SCALE: 1/2

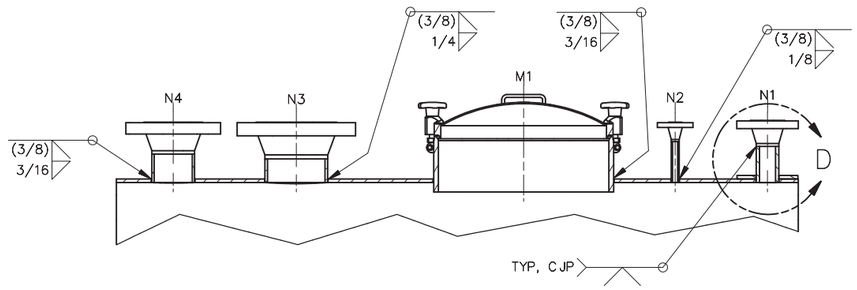

SECTION C–C

SCALE: 1/8

SIZE	INDEX CODE NUMBER				DWG-	808191	REV
	AREA	TYPE	CL	ORIG			
D	200	1696	40	286A			
SCALE: NOTED						SHEET 3	

File: 808191 WASTE FEED SUMP TANK.dwg
Path: C:\VAULT Projects\INL\FLUOR\WTU\WASTE FEED SUMP TANK\808191 WASTE FEED SUMP TANK.dwg
Layout Name: 3 of 6
ID: matt.pennington

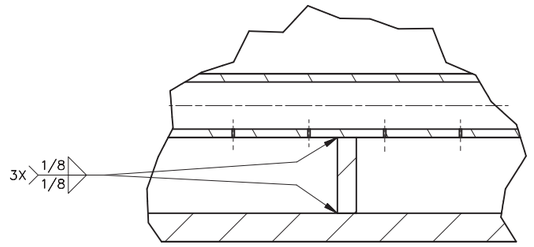

VIEW F

SCALE: 1/1

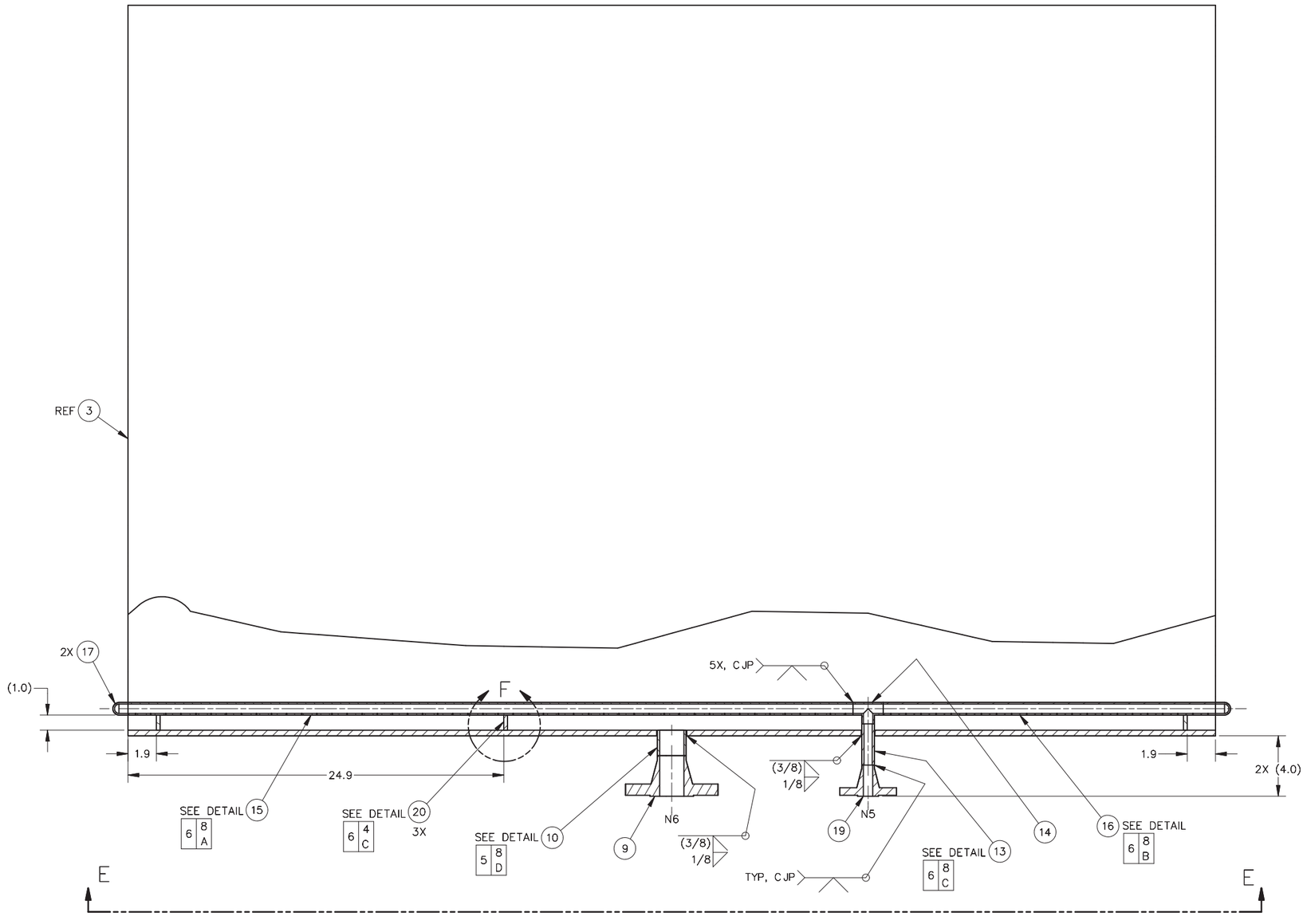

– 2 ASSEMBLY (ESTIMATED WEIGHT 1196 LBS)

SCALE: 1/4

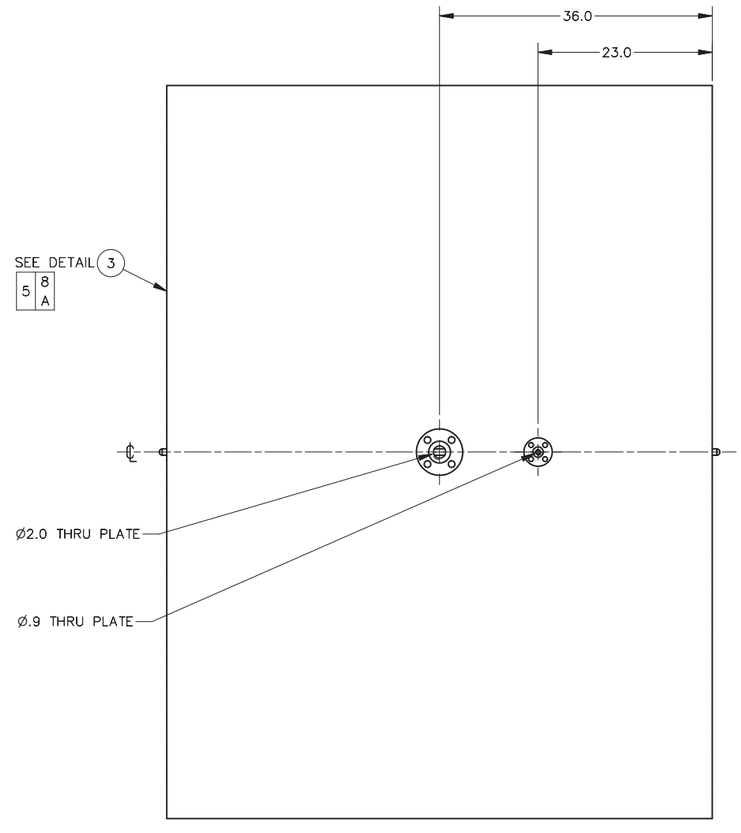

VIEW E–E

SCALE: 1/10

SIZE	INDEX CODE NUMBER				DWG–	REV
	AREA	TYPE	CL	ORIG		
D	200	1696	40	286A	808191	
SCALE: NOTED					SHEET 4	

File: 808191 WASTE FEED SUMP TANK.dwg
Path: C:\Vault Projects\INL FLUOR\WTU\WASTE FEED SUMP TANK\808191 WASTE FEED SUMP TANK.dgn
Layout Name: 4 of 6
6/9/2017 – 06:45:58
ID: matt.pennington

INV: FMT-D1-REV 2017-02-28

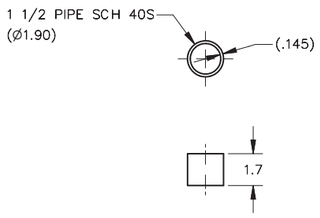

(10) DETAIL
SCALE: 1/4

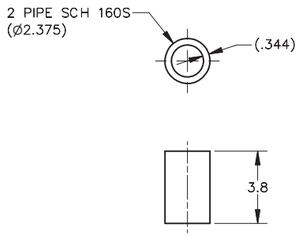

(8) DETAIL
SCALE: 1/4

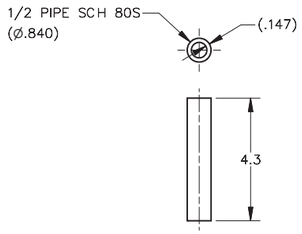

(18) DETAIL
SCALE: 3/8

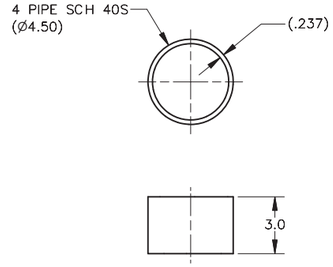

(6) DETAIL
SCALE: 1/4

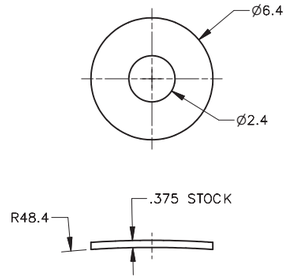

(24) DETAIL
SCALE: 1/4

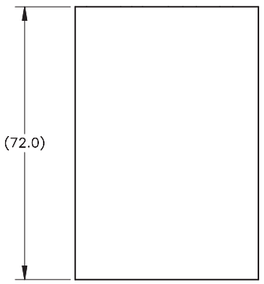

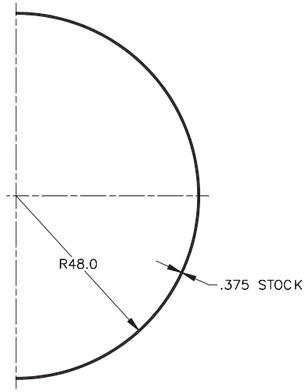

(3) DETAIL (16)
SCALE: 1/20

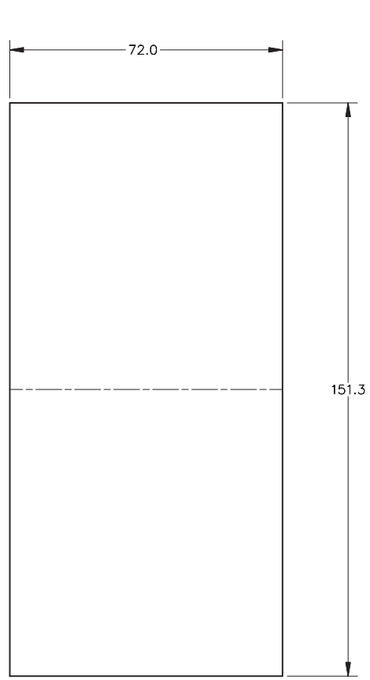

FLAT PATTERN
SCALE: 1/20

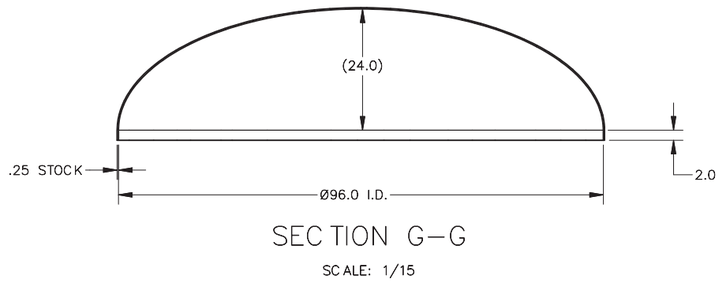

SECTION G–G
SCALE: 1/15

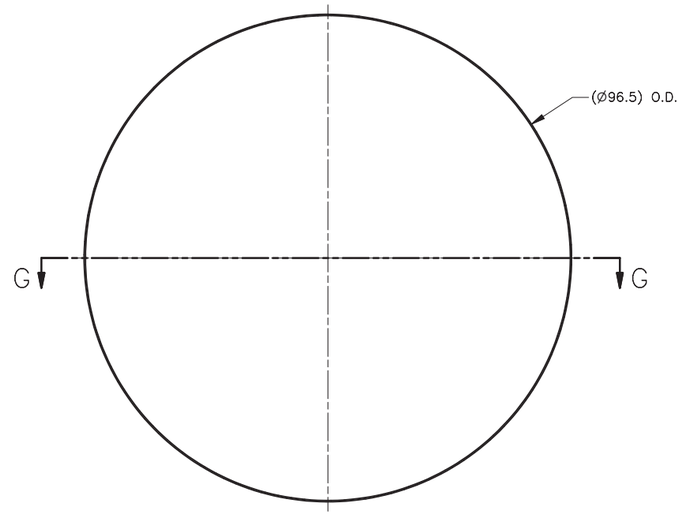

(4) DETAIL (ESTIMATED WEIGHT 770 LBS)
SCALE: 1/15

SIZE	INDEX CODE NUMBER				DWG–	REV
	AREA	TYPE	CL	ORIG		
D	200	1696	40	286A	808191	
SCALE: NOTED					SHEET 5	

File: 808191 WASTE FEED SUMP TANK.dwg
Path: C:\VAULT\Projects\INL\FLUOR\WTU\WASTE FEED SUMP TANK\808191 WASTE FEED SUMP TANK.dwg
Layout Name: 5 of 6
5/5/2017 – 06:45:58
ID: matt.pennington

INV: FMT-D1-REV 2017-02-28

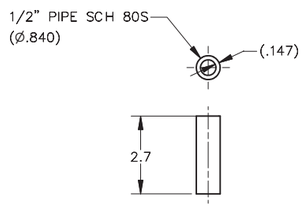

(13) DETAIL
SCALE: 3/8

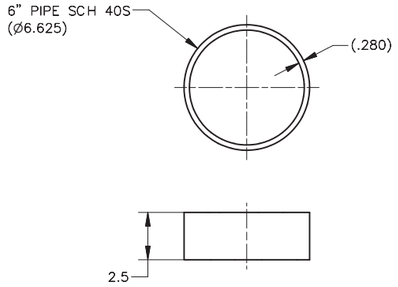

(21) DETAIL
SCALE: 1/4

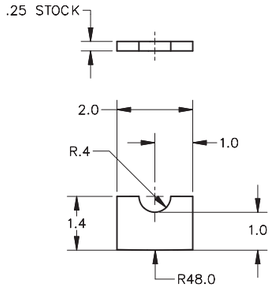

(20) DETAIL
SCALE: 1/2

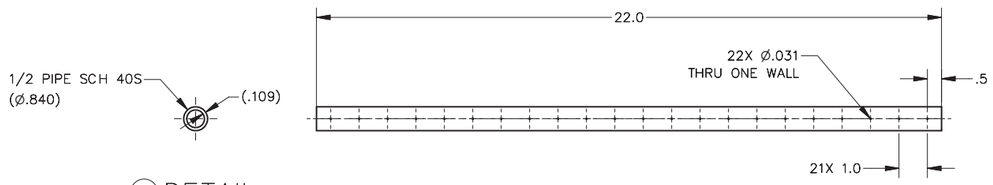

(16) DETAIL
SCALE: 3/8

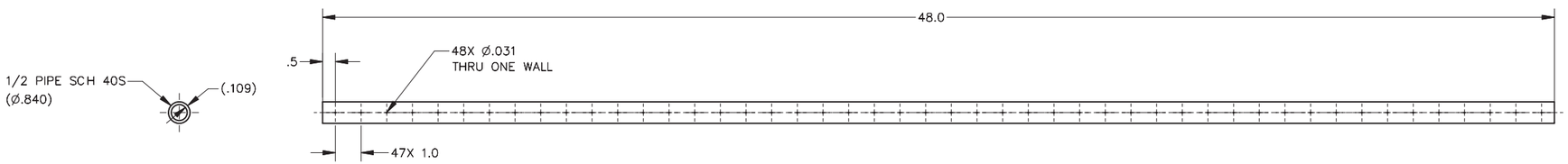

(15) DETAIL
SCALE: 3/8

SIZE	INDEX CODE NUMBER				DWG–	808191	REV
	AREA	TYPE	CL	ORIG			
D	200	1696	40	286A			
SCALE: NOTED						SHEET 6	

File: 808191 WASTE FEED SUMP TANK.dwg
Path: C:\VAULT\Projects\INL\FLUOR\WTU\WASTE FEED SUMP TANK\808191 WASTE FEED SUMP TANK.dwg
Layout Name: 6 of 6
ID: matt.pennington

INV: FMT-D1-REV 2017-02-28

REVISIONS	
REV	DESCRIPTION

NOTES:

1. REMOVE ALL BURRS AND SHARP EDGES.
2. ALL MACHINED FILLET RADII .03 MAXIMUM UNLESS OTHERWISE NOTED.
3. WELDING SHALL BE IN ACCORDANCE WITH ASME B & PV CODE SECTION IX (2010). (INL WELD PROCEDURES S 2.0 OR S 6.9), USING WELD FILLER METAL, ITEM 8.
4. (Q) VISUALLY INSPECT ALL WELDS IN ACCORDANCE WITH ASME B & PV CODE, SECTION V, ARTICLE 9 (2013). ACCEPTANCE SHALL BE IN ACCORDANCE WITH ASME B & PV CODE, SECTION VIII, DIVISION 1, PART UW-35 AND 36 (2013) (TPR-4981 APPENDIX B).
5. (Q) FINAL ASSEMBLY SHALL MEET CLEANLINESS REQUIREMENTS OF STD-7022, LEVEL D.
6. ESTIMATED WEIGHT 748 LBS.
7. SEE QLD NUMBER 5516 FOR QUALITY LEVEL DETERMINATION.

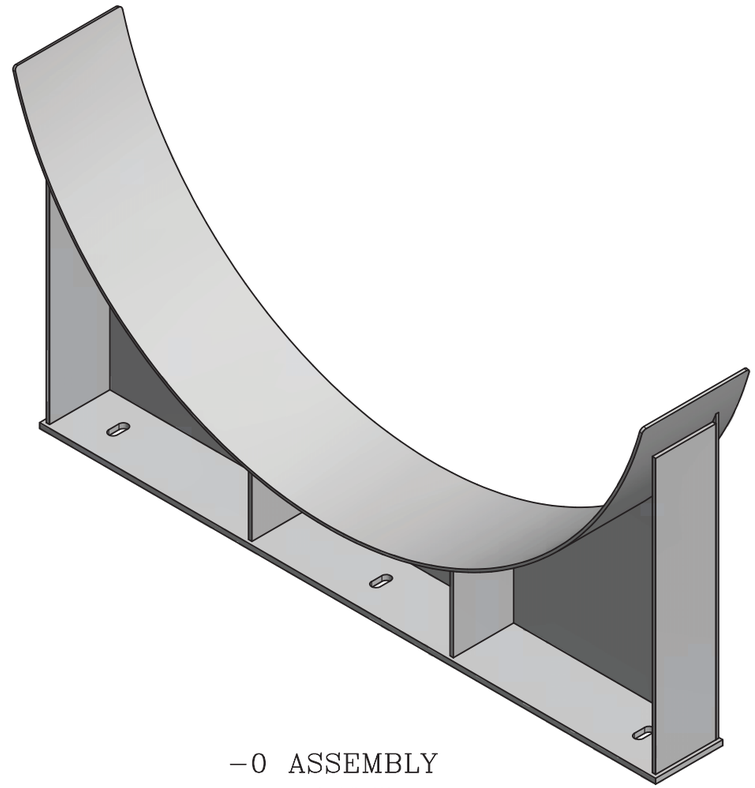

-0 ASSEMBLY

3D VIEW

(SHOWN FOR CLARITY)
SCALE: NONE

-1 QTY	-0 QTY	QUAL LEVEL	PART OR IDENTIFYING NO.	NOMENCLATURE OR DESCRIPTION	MATERIAL/SPECIFICATION OR VENDOR NAME	ITEM NO.
AR	AR	3		WELD FILLER METAL	ER 308 OR 308L AWS A 5.9, A 5.4 / ASME SFA 5.4 / 5.9	8
1		3	-7	BASE, WITH HOLES	PLATE, 304/304L ASTM A240	7
1	1	3	-6	BAND	PLATE, 304/304L ASTM A240	6
2	2	3	-5	SUPPORT, SHORT	PLATE, 304/304L ASTM A240	5
1	1	3	-4	WALL	PLATE, 304/304L ASTM A240	4
2	2	3	-3	SUPPORT	PLATE, 304/304L ASTM A240	3
	1	3	-2	BASE, SLOTTED	PLATE, 304/304L ASTM A240	2
		3	-1	ASSEMBLY, WITH HOLES		1
		3	-0	ASSEMBLY, SLOTTED		0

PARTS LIST

INSPECTION REQUIREMENTS
QC REQUIRED
(Q) DENOTES Q/C INSP. REQD.

DASH NO.	NEXT ASSY
-1	808191
-0	808191

APPLICATION

DIMENSIONING AND SYMBOLOGY PER ASME Y14.5-2009 AND STD-11

UNLESS OTHERWISE SPECIFIED

SURFACE ROUGHNESS 125

DIMENSIONS AND TOLERANCES ARE IN INCHES

TOLERANCES .X ± .1
DECIMALS .XX ± .03
.XXX ± .010
FRACTIONS ± 1/8
ANGULAR ± 2°

DO NOT SCALE DRAWING

SIGNATURES/DATES APPLY TO CURRENT RELEASE ONLY

	SIGN AND DATE
DESIGN: R. CAMPBELL	Rodney C. Campbell HukanAscendent, Inc. 2017.06.15 08:20:10 -06'00'
DRAFTER: M. PENNINGTON	Matt.Pennington Walsh Engineering Services 2017.06.15 10:21:33 -06'00'
TECHNICAL CHECK: M. CHADEK, P.E.	Mark Chadek Fluor Idaho 2017.06.15 09:28:58 -06'00'
ENG GROUP SUPERVISOR: R. EASTMAN, P.E.	Randy Eastman Fluor Idaho 2017.06.15 08:04:11 -06'00'
DESIGN LEAD/AUTHORITY: J. KLINGER, P.E.	Jeff Klinger Fluor Idaho 2017.06.15 15:39:47 -06'00'
DRAFTING CHECK/ EFFECTIVE DATE: K. KELLER	Kris Keller Fluor Idaho 2017.06.19 18:10:30 -06'00'
PROJECT NUMBER: 25051	
DRF NUMBER: 354736	

Idaho Cleanup Project Core — Fluor IDAHO

INTEC CPP-1696
INTEGRATED WASTE TREATMENT UNIT
4-PACK SUMP TANK SADDLE ASSEMBLY

SIZE	INDEX CODE NUMBER AREA	TYPE	CL	ORIG	DWG-	REV
D	200	1696	40	286A	808192	

SCALE: NOTED — SHEET 1 OF 3

File: 808192_SADDLE.dwg
Path: C:\VAULT\Projects\INL\FLUOR\WTU\WASTE_FEED_SUMP_TANK\808192_SADDLE.dwg
Date: 6/15/2017 - 06:46:56
Layout Name: 1 of 3
ID: matt.pennington

INV: FMT-D1-REV 2017-02-28

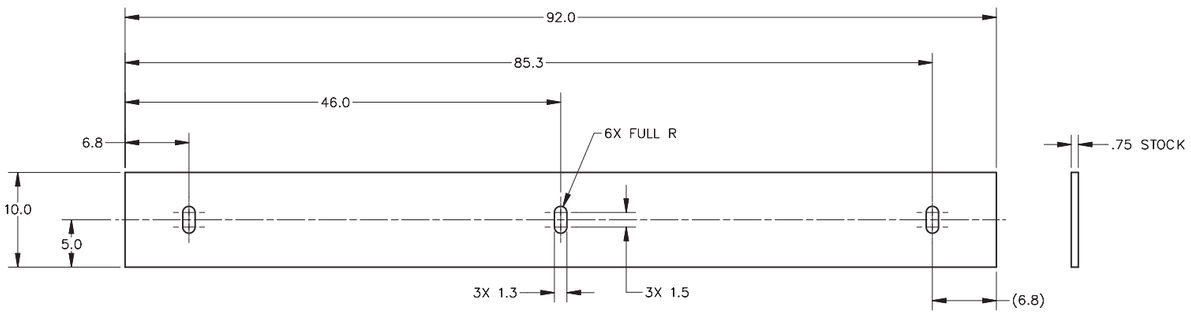

② DETAIL
SCALE: 1/8

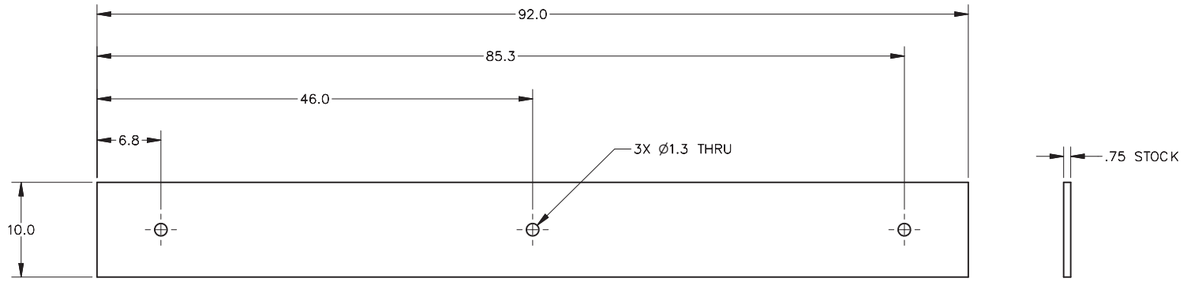

⑦ DETAIL
SCALE: 1/8

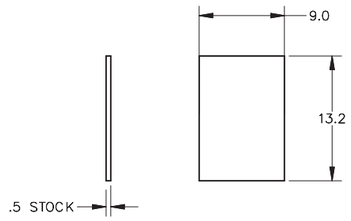

⑤ DETAIL
SCALE: 1/8

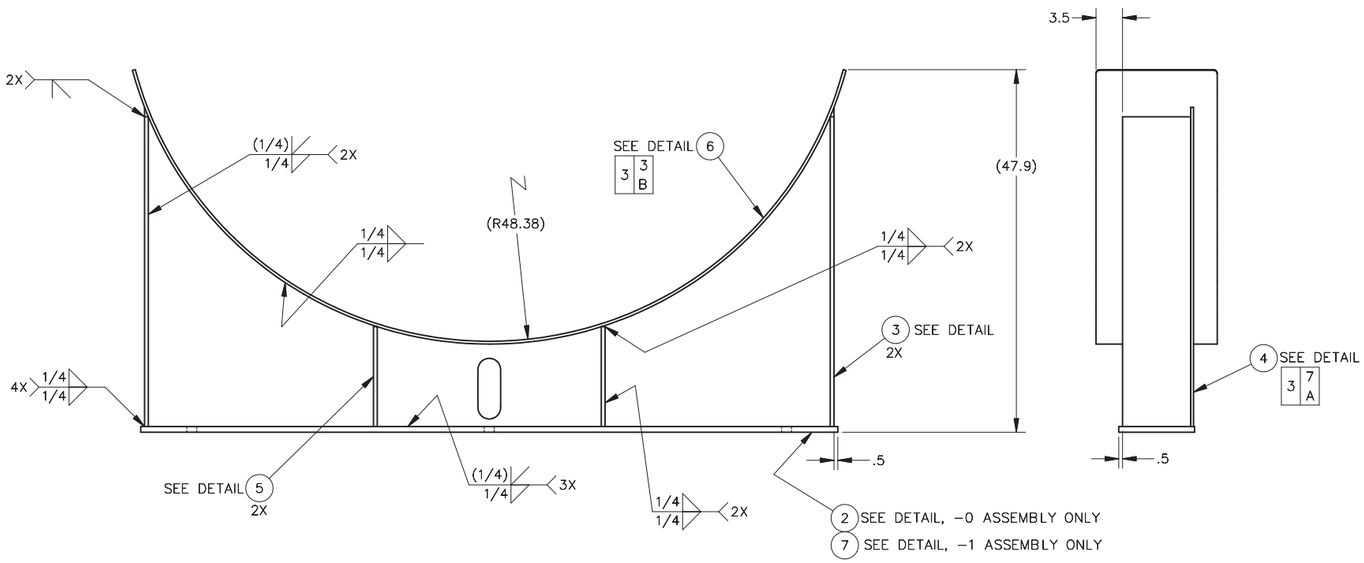

-0 ASSEMBLY SHOWN (ESTIMATED WEIGHT 748 LBS)
-1 ASSEMBLY SIMILAR (ESTIMATED WEIGHT 748 LBS)
SCALE: 1/10

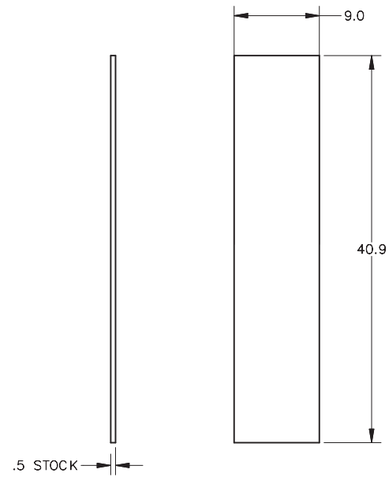

③ DETAIL
SCALE: 1/8

SIZE	INDEX CODE NUMBER				DWG-	REV
	AREA	TYPE	CL	ORIG		
D	200	1696	40	286A	808192	
SCALE: NOTED					SHEET 2	

File: 808192 SADDLE.dwg
Path: C:\VAULT Projects\INX FLUOR\WTU\WASTE FEED SUMP TANK 808192 SADDLE.dwg
Date: 6/15/2017 - 06:46:56
Layout Name: 2 of 3
ID: matt.pennington

INV: FMT-D1-REV 2017-02-28

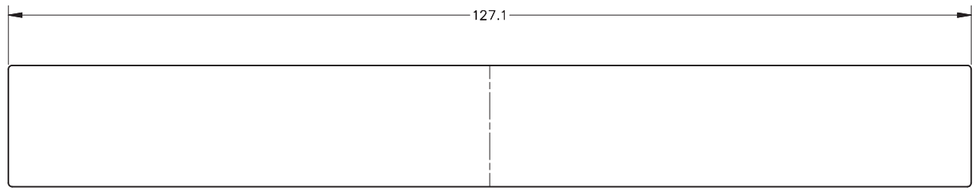

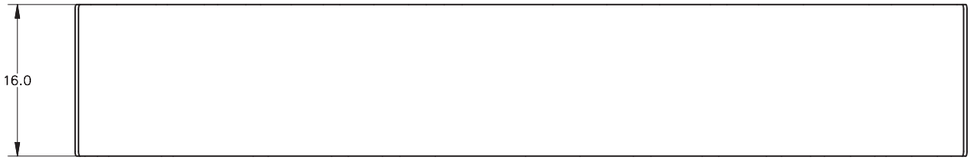

DETAIL 6 FLAT PATTERN

SCALE: 1/10

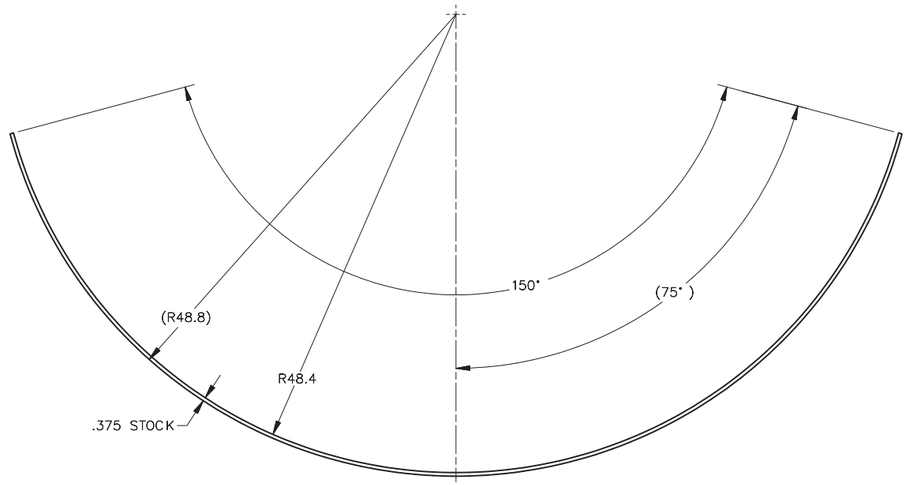

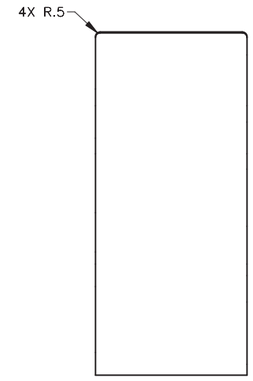

⑥ DETAIL

SCALE: 1/8

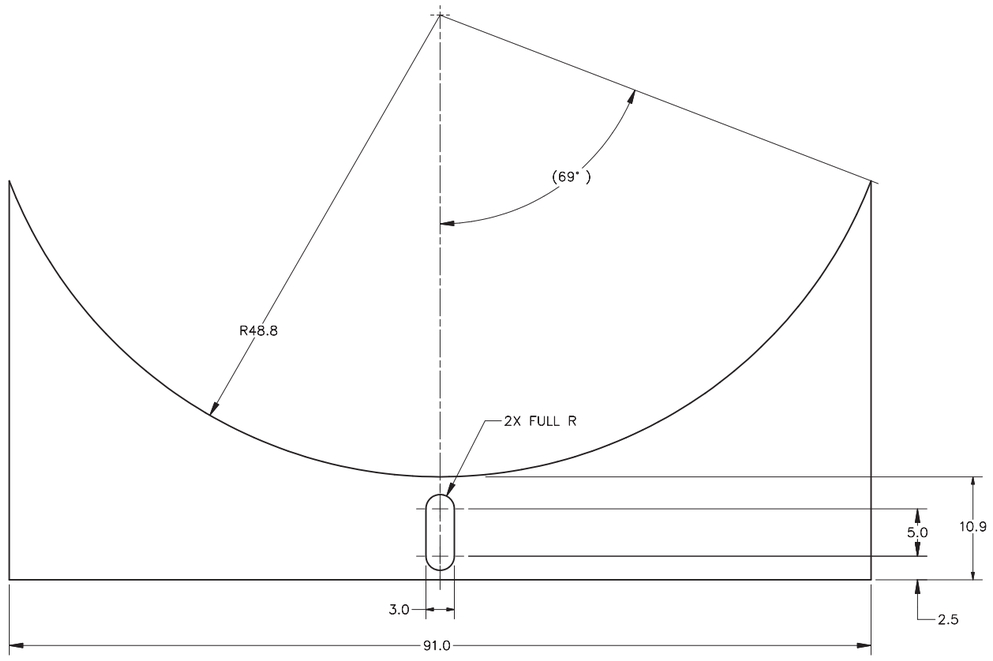

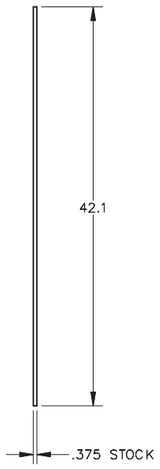

④ DETAIL

SCALE: 1/8

SIZE	INDEX CODE NUMBER				DWG-	REV
	AREA	TYPE	CL	ORIG		
D	200	1696	40	286A	808192	
SCALE: NOTED					SHEET 3	

ID: matt.pennington
Layout Name: 3 of 3
Date: 6/15/2017 - 06:46:56
File: 808192 SADDLE.dwg
Path: C:\VAULT\Projects\INCF\LUOR\WTU\WASTE FEED SUMP TANK\808192 SADDLE.dwg

INV: FMT-D1-REV 2017-02-28

REVISIONS	
REV	DESCRIPTION

NOTES:

1. REMOVE ALL BURRS AND SHARP EDGES.
2. ALL MACHINED FILLET RADII .03 MAXIMUM UNLESS OTHERWISE NOTED.
3. WELDING SHALL BE IN ACCORDANCE WITH INL WELD PROCEDURES S 2.0 OR S 6.9, USING WELD FILLER METAL, ITEM 56.
4. (Q) VISUALLY INSPECT ALL WELDS IN ACCORDANCE WITH ASME B & PV CODE, SECTION V, ARTICLE 9. ACCEPTANCE SHALL BE IN ACCORDANCE WITH ASME B & PV CODE, SECTION VIII, DIVISION 2, PART 7, (2013) (TPR-4981 APPENDIX B).
5. (Q) FINAL ASSEMBLY SHALL MEET CLEANLINESS REQUIREMENTS OF STD-7022, LEVEL D.
6. MARK PER STD-7006-2A OR STD-7006-2D IN 1.5 INCH HIGH CHARACTERS WITH VESSEL ID, CAPACITY AND "CAUTION TANK MAY BE HOT" (BOTH SIDES). LOCATE APPROXIMATELY WHERE SHOWN. FILL CHARACTERS WITH SANFORD T.E.C. MARKER #13401 OR #13501, ITW DYMON FORMULA Q404 INK OR OTHER HIGH-PURITY LOW-CHLORIDE BLACK INK THAT COMPLIES WITH ASTM C1217-00 OR RDT F7-3T. DO NOT APPLY VARNISH OVER MARKING.
7. (Q) VERIFY MARKINGS HAVE BEEN ACCURATELY APPLIED.
8. ESTIMATED WEIGHT 4,363 LBS (EMPTY).
9. LIQUID PENETRANT EXAMINATION SHALL BE PERFORMED ON ALL EXTERNAL PRESSURE BOUNDRY WELDS IN ACCORDANCE WITH ASME B & PV CODE, SECTION V, ARTICLE 6. ACCEPTANCE SHALL BE IN ACCORDANCE WITH ASME B & PV CODE, SECTION VIII, DIVISION 1, MANDATORY APPENDIX 8 (2013) (TPR-4975, APPENDIX G).
10. COMPLETED VESSEL SHALL UNDERGO A HYDROSTATIC LEAK TEST AT A PRESSURE OF 4 TO 5 PSIG. INSPECT ALL CONNECTIONS AND WELD JOINTS FOR LEAKS, MAINTAIN PRESSURE FOR 4 HOURS. ACCEPTANCE CRITERIA: NO LEAKS.
11. CLARIFIER TANK VES-SRC-134 DOES NOT FALL WITHIN ASME B & PV, SECTION VIII CODE REQUIREMENTS. HOWEVER THE TANK HAS BEEN DESIGNED IN ACCORDANCE WITH THE B & PV CODE MATERIAL ALLOWABLE STRESS AS A BEST ENGINEERING PRACTICE, SEE EA-TOR 3.03-001 FOR THE ANALYSIS.
12. FOR INSTALLATION SECTIONS SEE SHEET 2, SEE DRAWING 808190 FOR INSTALLATION.
13. WELD ITEM 19 (3X TIE RODS) TO ITEMS 20 AND 30 PRIOR TO WELDING ITEMS 44 THRU 49 (TOP BRACES) TO ITEM 30.
14. USE ITEM 30 AS A GUIDE FOR FORMING ITEM 12.
15. DETERMINE PIPE LENGTH AFTER SUMP TANK AND CLARIFIER ARE SHIMMED AND LEVEL.
16. BENT PLATES MAY REPLACE WELDED SECTIONS.
17. WELD ITEMS 40 AND 41 TO ITEM 14 PRIOR TO WELDING TO BOTTOM OF TANK.
18. (Q) MATERIAL MUST HAVE ACTUAL CERTIFIED MATERIAL TEST REPORTS (CMTR's) ISSUED BY THE ORIGINAL MANUFACTURER OR INDEPENDENT TESTING LABORATORY PERFORMING MATERIAL TESTING WHICH CERTIFIES THAT THE MATERIAL HAS BEEN INSPECTED AND TESTED IN ACCORDANCE WITH THE REQUIREMENTS OF THE SPECIFICATION AND THAT THE RESULTS OF THE CHEMICAL ANALYSES AND MECHANICAL TESTS MEET THE REQUIREMENTS OF THE SPECIFICATION FOR THE SPECIFIC GRADE. THE HEAT NUMBER SHALL BE MARKED ON THE CMTR's AND ON THE MATERIAL.
19. (Q) MATERIAL MUST HAVE ACTUAL CERTIFIED MATERIAL TEST REPORTS (CMTR's) ISSUED BY THE ORIGINAL MANUFACTURER OR INDEPENDENT TESTING LABORATORY PERFORMING MATERIAL TESTING WHICH CERTIFIES THAT THE MATERIAL HAS BEEN INSPECTED AND TESTED IN ACCORDANCE WITH THE REQUIREMENTS OF THE SPECIFICATION AND THAT THE RESULTS OF THE CHEMICAL ANALYSES MEET THE REQUIREMENTS OF THE SPECIFICATION FOR THE AWS MATERIAL CLASSIFICATION. EACH END OF CUT LENGTHS OF WELD FILLER METAL SHALL BE MARKED (OR MARK THE END OF THE SPOOLED WIRE) SHOWING THE AWS MATERIAL CLASSIFICATION AND HEAT NUMBER. THE HEAT NUMBER MUST APPEAR ON THE CMTR's.

NOZZLE TABLE

NOZZLE	DESCRIPTION	SIZE	SCHEDULE	FLANGE TYPE
N1	FROM WASTE FEED TANK	4"	40S	WELD NECK, RF CLASS 300
N2	NITRIC ACID	1/2"	40S	WELD NECK, RF CLASS 300
N3	VENT	4"	40S	WELD NECK, RF CLASS 300
N4	INSTRUMENTS	6"	40S	WELD NECK, RF CLASS 300
N5	FROM DMR	2"	40S	WELD NECK, RF CLASS 300
N6	FROM OGF	2"	40S	WELD NECK, RF CLASS 300
N7	FROM PGF	2"	40S	WELD NECK, RF CLASS 300
N8	DRAIN	2"	40S	WELD NECK, RF CLASS 300
N9	OUTLET	2"	40S	WELD NECK, RF CLASS 300
N10	AIR	1/2"	40S	WELD NECK, RF CLASS 300

-2 QTY REQD	-1 QTY REQD	-0 QTY REQD	QUAL LEVEL	PART OR IDENTIFYING NO.	NOMENCLATURE OR DESCRIPTION	MATERIAL/SPECIFICATION OR VENDOR NAME	ITEM NO.
					PARTS LIST		
AR	AR	AR	3		WELD FILLER METAL	ER 308 OR 308L AWS A 5.9, A 5.4 / ASME SFA 5.4 / 5.9	56
	5		3	-55	SETTLING PLATE BOTTOM	PLATE, 304/304L SST ASTM A240	55
	4		3	-54	SETTLING PLATE BRACKET	ANGLE, 304/304L SST ASTM A276/A479	54
2			3	-53	BRACE, UPPER VERTICAL SHORT	HSS, MECHANICAL TUBING 304/304L SST ASTM A554	53
2			3	-52	BRACE, UPPER VERTICAL	HSS, MECHANICAL TUBING 304/304L SST ASTM A554	52
2			3	-51	BRACE, ANGLE TOP	HSS, MECHANICAL TUBING 304/304L SST ASTM A554	51
2			3	-50	LEG	HSS, MECHANICAL TUBING 304/304L SST ASTM A554	50
	2		3	-49	TOP BRACE 6	PLATE, 304/304L SST ASTM A240	49
	2		3	-48	TOP BRACE 5	PLATE, 304/304L SST ASTM A240	48
	2		3	-47	TOP BRACE 4	PLATE, 304/304L SST ASTM A240	47
	2		3	-46	TOP BRACE 3	PLATE, 304/304L SST ASTM A240	46
	2		3	-45	TOP BRACE 2	PLATE, 304/304L SST ASTM A240	45
	2		3	-44	TOP BRACE 1	PLATE, 304/304L SST ASTM A240	44
	1		3	-43	BODY SIDE	PLATE, 304/304L SST ASTM A240	43
	2		3	-42	BODY END	PLATE, 304/304L SST ASTM A240	42
	1		3	-41	SPARGE BRACKET	PIPE, SEAMLESS ASTM A312 GRADE TP304L SST	41
	2		3	-40	SPARGE BRACE	PLATE, 304/304L SST ASTM A240	40
	1		3		CAP, BW 1/2 SCHED 40S	ASTM A403 GRADE WP304L SST	39
	1		3	-38	VERTICAL SPARGE PIPE	PIPE, SEAMLESS ASTM A312 GRADE TP304L SST	38
	1		3		ELBOW, BW 90° 1/2" SCHED 40S, LR	ASTM A403 GRADE WP304L SST	37
	1		3	-36	N10 SPARGE PIPE	PIPE, SEAMLESS ASTM A312 GRADE TP304L SST	36
	2		3		N2, N10 WELD NECK FLANGE 1/2 CLASS 300, RF SCHED 40S BORE	ASTM A182-F304L SST, ASME B16.5	35
	1		3	-34	N2 NOZZLE NECK	PIPE, SEAMLESS ASTM A312 GRADE TP304L SST	34
	2		3		N1, N3 WELD NECK FLANGE 4 CLASS 300, RF SCHED 40S BORE	ASTM A182-F304L SST, ASME B16.5	33
	2		3	-32	N1, N3 NOZZLE NECK	PIPE, SEAMLESS ASTM A312 GRADE TP304L SST	32
7			3	-31	BRACE, HORIZONTAL	HSS, MECHANICAL TUBING 304/304L SST ASTM A554	31
	1		3	-30	TOP	PLATE, 304/304L SST ASTM A240	30
	1		3	-29	BAFFLE STEP PLATE	PLATE, 304/304L SST ASTM A240	29
	1		3		N4, WELD NECK FLANGE 6 CLASS 300, RF SCHED 40S BORE	ASTM A182-F304L SST, ASME B16.5	28
	1		3	-27	N4 NOZZLE NECK	PIPE, SEAMLESS ASTM A312 GRADE TP304L SST	27
6			3	-26	BRACE, ANGLE LONG	HSS, MECHANICAL TUBING 304/304L SST ASTM A554	26
6			3	-25	BRACE LOWER SHORT	HSS, MECHANICAL TUBING 304/304L SST ASTM A554	25
2			3	-24	BRACE, ANGLE SHORT	HSS, MECHANICAL TUBING 304/304L SST ASTM A554	24
4			3	-23	LEG PLATE	PLATE, 304/304L SST ASTM A240	23
1			3	-22	BRACE, VERTICAL	HSS, MECHANICAL TUBING 304/304L SST ASTM A554	22
2			3	-21	LEG	HSS, MECHANICAL TUBING 304/304L SST ASTM A554	21
	1		3	-20	OVERFLOW ANGLE BOTTOM	PLATE, 304/304L SST ASTM A240	20
	3		3	-19	TIE ROD, VERTCAL	BAR, 304/304L SST ASTM A276	19
	1		3	-18	OVERFLOW BOTTOM	PLATE, 304/304L SST ASTM A240	18
	1		3	-17	BAFFLE	PLATE, 304/304L SST ASTM A240	17
	1		3	-16	N9 NOZZLE NECK	PIPE, SEAMLESS ASTM A312 GRADE TP304L SST	16
	1		3	-15	N8 NOZZLE NECK	PIPE, SEAMLESS ASTM A312 GRADE TP304L SST	15
	1		3	-14	BOTTOM SLUDGE PLATE	PLATE, 304/304L SST ASTM A240	14
	8		3	-13	SETTLING PLATE	PLATE, 304/304L SST ASTM A240	13
	1		3	-12	OVERFLOW SIDE	PLATE, 304/304L SST ASTM A240	12
	1		3	-11	OVERFLOW	PLATE, 304/304L SST ASTM A240	11
	1		3	-10	BODY SIDE, ANGLE	PLATE, 304/304L SST ASTM A240	10
	5		3		N5, N6, N7, N8, N9 WELD NECK FLANGE 2 CLASS 300, RF SCHED 40S BORE	ASTM A182-F304L SST, ASME B16.5	9
	3		3	-8	N5, N6, N7 NOZZLE NECK	PIPE, SEAMLESS ASTM A312 GRADE TP304L SST	8
	1		3	-7	INLET TOP	PLATE, 304/304L SST ASTM A240	7
	1		3	-6	INLET	PLATE, 304/304L SST ASTM A240	6
	1		3	-5	BODY SIDE, SMALL	PLATE, 304/304L SST ASTM A240	5
	2		3	-4	ANGLE END	PLATE, 304/304L SST ASTM A240	4
	2		3	-3	ANGLE SIDE	PLATE, 304/304L SST ASTM A240	3
		1	3	-2	FRAME ASSEMBLY		2
		1	3	-1	TANK ASSEMBLY		1
			3	-0	ASSEMBLY		0

INSPECTION REQUIREMENTS	DASH NO.	APPLICATION
QC REQUIRED	-0	808190
(Q) DENOTES Q/C INSP. REQD.	NEXT ASSY	

DIMENSIONING AND SYMBOLOGY PER ASME Y14.5-2009 AND STD-11
UNLESS OTHERWISE SPECIFIED
SURFACE ROUGHNESS 125
DIMENSIONS AND TOLERANCES ARE IN INCHES
TOLERANCES .X ±.1
DECIMALS .XX ±.03
.XXX ±.010
FRACTIONS ±1/8
ANGULAR ±2°
DO NOT SCALE DRAWING

SIGNATURES/DATES APPLY TO CURRENT RELEASE ONLY — SIGN AND DATE

DESIGN:	R. CAMPBELL	Rodney C. Campbell HuleAscendent, Inc. 2017.07.13 11:43:06 -06'00'
DRAFTER:	M. PENNINGTON	Matt Pennington Wood Environment & Infrastructure Solutions 2017.07.13 10:54:23 -06'00'
TECHNICAL CHECK:	M. CHADEK, P.E.	Mark Chadek Fluor Idaho 2017.07.13 11:49:26 -06'00'
ENG GROUP SUPERVISOR:	R. EASTMAN, P.E.	Randy Eastman Fluor Idaho 2017.07.13 12:32:11 -06'00'
DESIGN LEAD/AUTHORITY:	J. KLINGER, P.E.	Jeff Klinger Fluor Idaho 2017.07.13 12:35:43 -06'00'
DRAFTING CHECK/ EFFECTIVE DATE:	K. KELLER	Kris Keller Fluor Idaho 2017.07.18 14:09:49 -06'00'
PROJECT NUMBER:	25051	
DRF NUMBER:	354827	

Idaho Cleanup Project Core — Fluor IDAHO

INTEC CPP-1696
INTEGRATED WASTE TREATMENT UNIT
4-PACK CLARIFIER
ASSEMBLY
VES-SRC-134

SIZE D | INDEX CODE NUMBER: AREA 200 | TYPE 1696 | ICL 40 | ORIG 286A
DWG- 808193 REV
SCALE: NOTED
SHEET 1 OF 12

File: 808193 CLARIFIER.dwg Date: 7/13/2017 - 10:37:41 Layout Name: 1 of 12
Path: C:\VAULT\Projects\INL\FLUOR\WTU\WASTE FEED SUMP TANK\808193 CLARIFIER.dwg
ID: matt.pennington

INV: FMT-D1-REV 2017-02-28

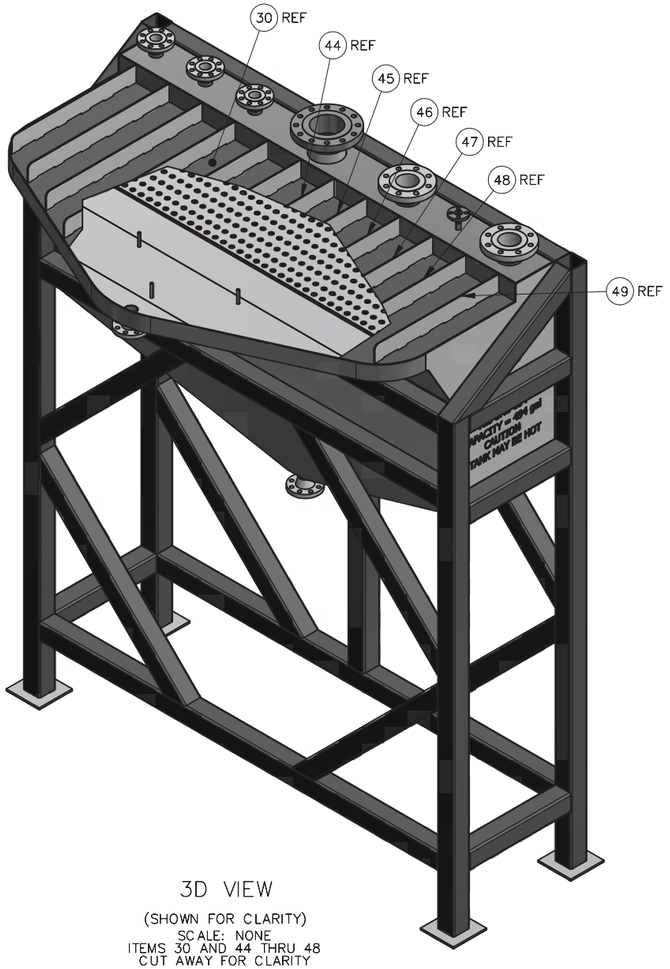

3D VIEW

(SHOWN FOR CLARITY)
SCALE: NONE
ITEMS 30 AND 44 THRU 48
CUT AWAY FOR CLARITY

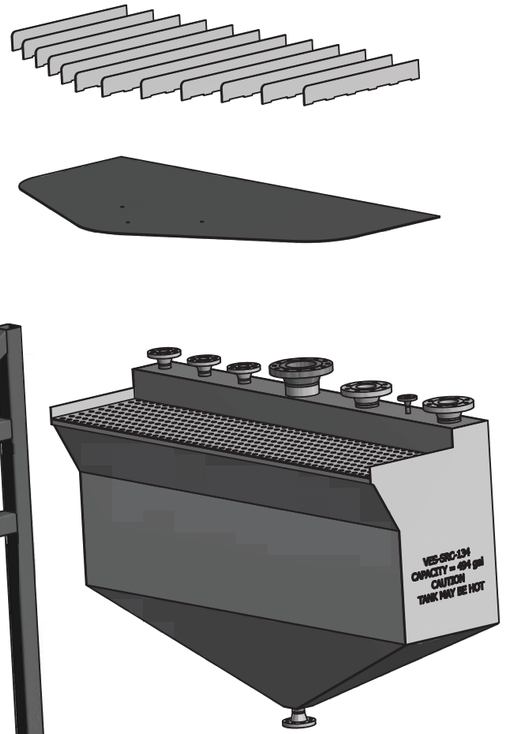

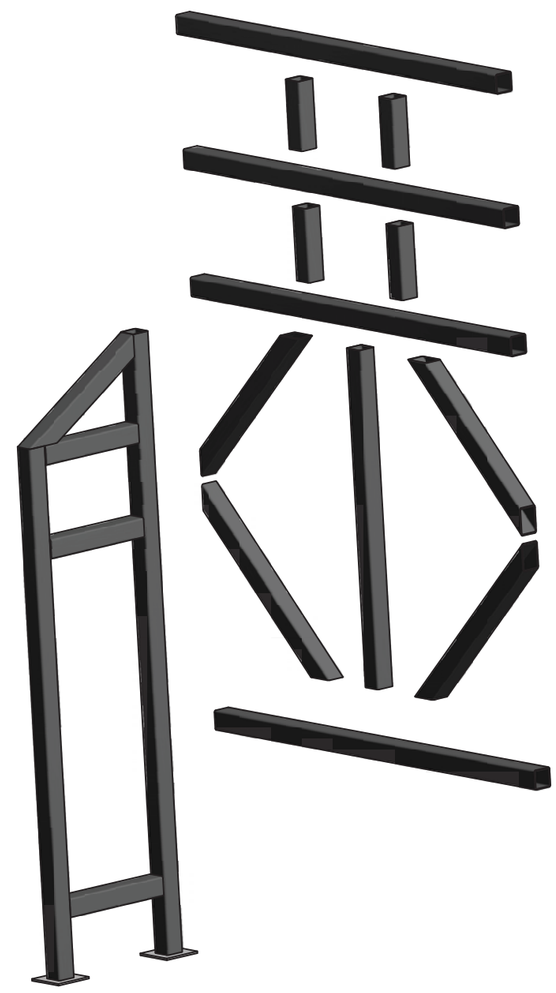

INSTALLATION SECTIONS FOR TRANSFER INTO CELL

3D VIEW

(SHOWN FOR CLARITY)
SCALE: NONE

SIZE	INDEX CODE NUMBER				DWG-	808193	REV
	AREA	TYPE	CL	ORIG			
D	200	1696	40	286A			
SCALE: NOTED						SHEET 2	

File: 808193 CLARIFIER.dwg Date: 7/13/2017 - 10:37:41 Layout Name: 2 of 12
Path: C:\VAULT Projects\INL\FLUOR\WTU\WASTE FEED SUMP TANK\808193 CLARIFIER.dwg
ID: matt.pennington

INV: FMT-D1-REV 2017-02-28

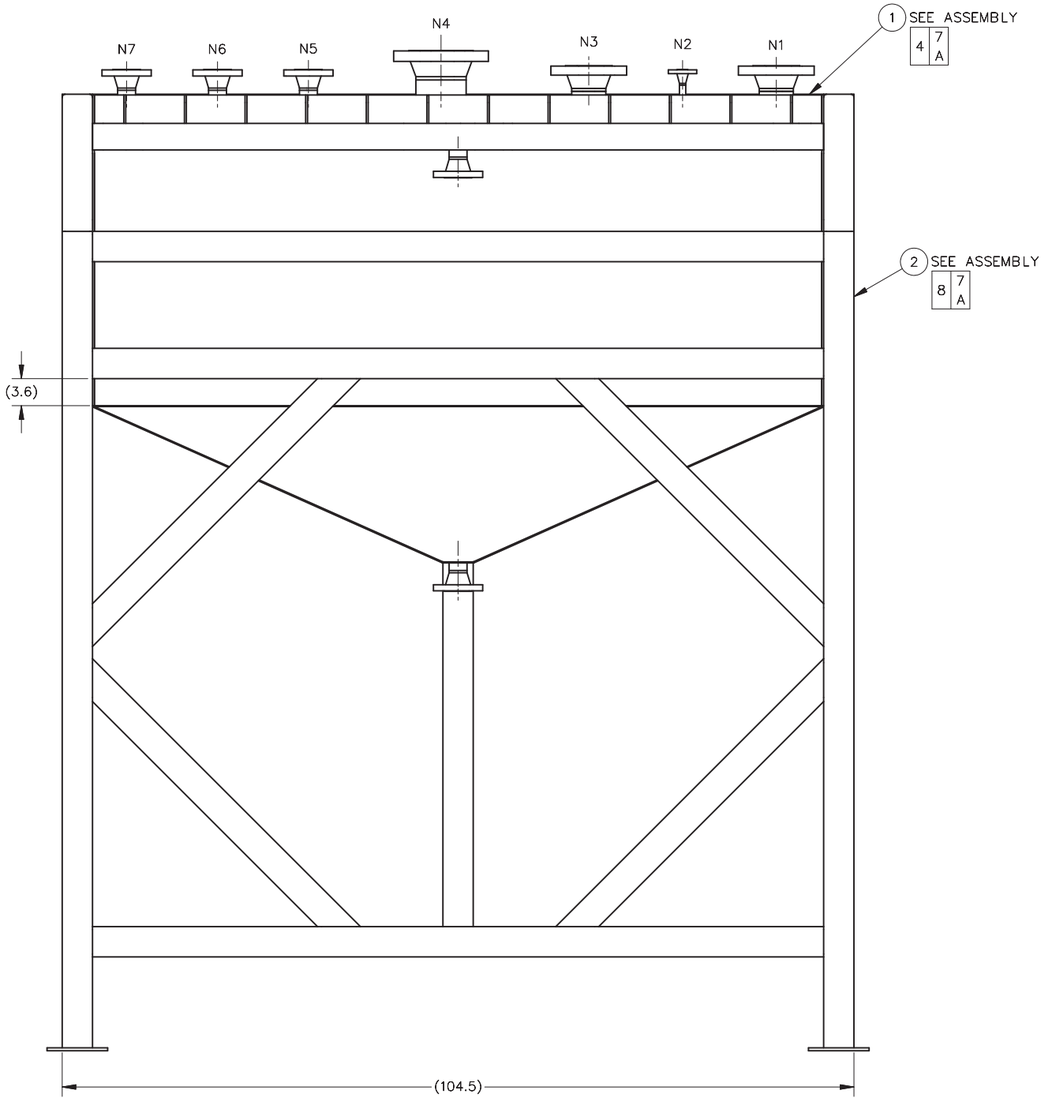

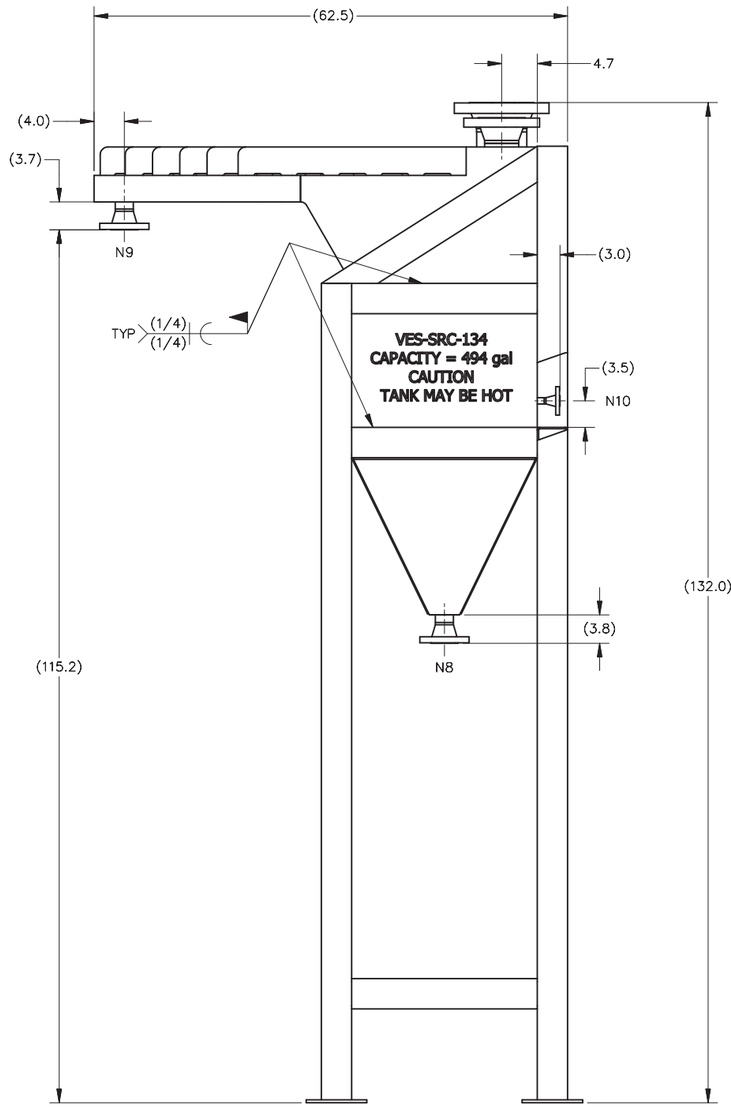

-0 ASSEMBLY

SCALE: 1/10

SIZE	INDEX CODE NUMBER				DWG-	REV
D	AREA	TYPE	CL	ORIG	808193	
	200	1696	40	286A		
SCALE: NOTED					SHEET 3	

File: 808193 CLARIFIER.dwg Date: 7/13/2017 - 10:37:41 Layout Name: 3 of 12
Path: C:\VAULT Projects\INL\FLUOR\WTU\WASTE FEED SUMP TANK\808193 CLARIFIER.dwg
ID: matt.pennington

INV: FMT-D1-REV 2017-02-28

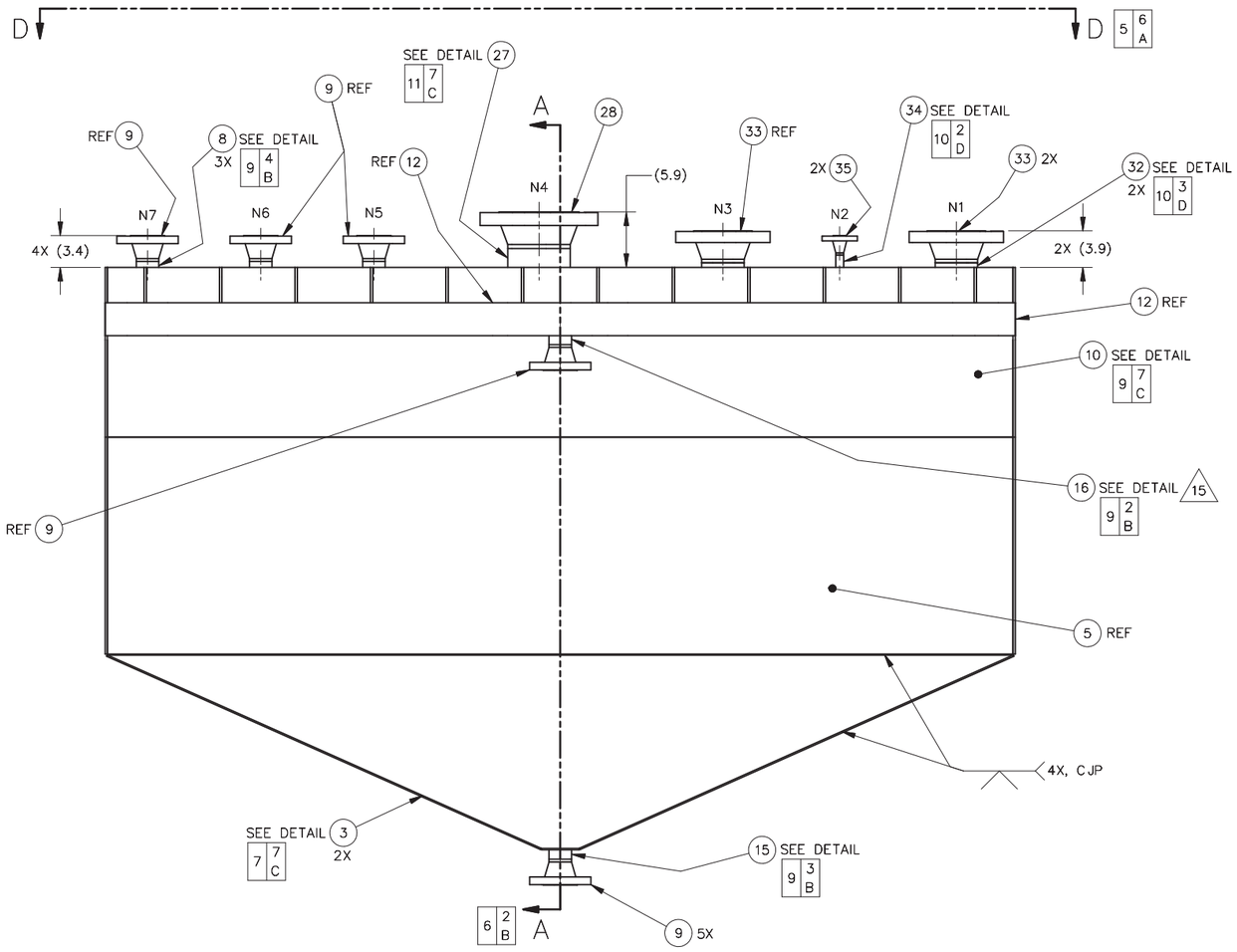

– 1 ASSEMBLY

SCALE: 1/8

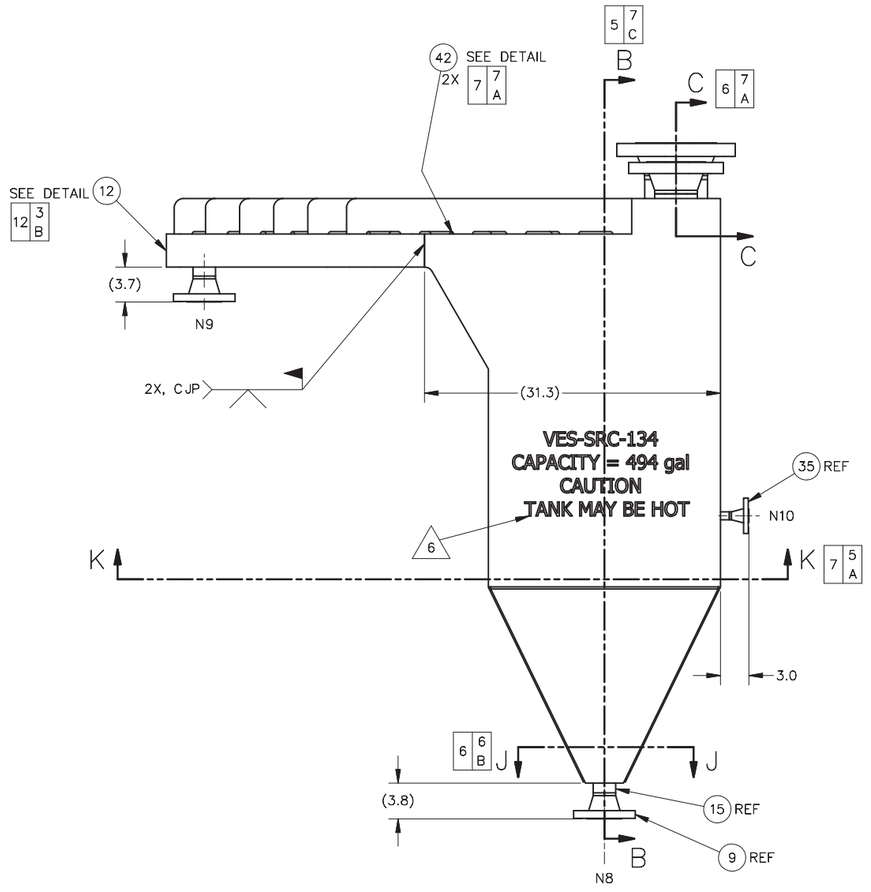

SIZE	INDEX CODE NUMBER				DWG-	REV
	AREA	TYPE	CL	ORIG		
D	200	1696	40	286A	808193	
SCALE: NOTED					SHEET 4	

File: 808193 CLARIFIER.dwg Date: 7/13/2017 - 10:37:41 Layout Name: 4 of 12
Path: C:\Vault Projects\INL\FLUOR\WTU\WASTE FEED SUMP TANK 808193 CLARIFIER.dwg
ID: matt.pennington

INV: FMT-D1-REV 2017-02-28

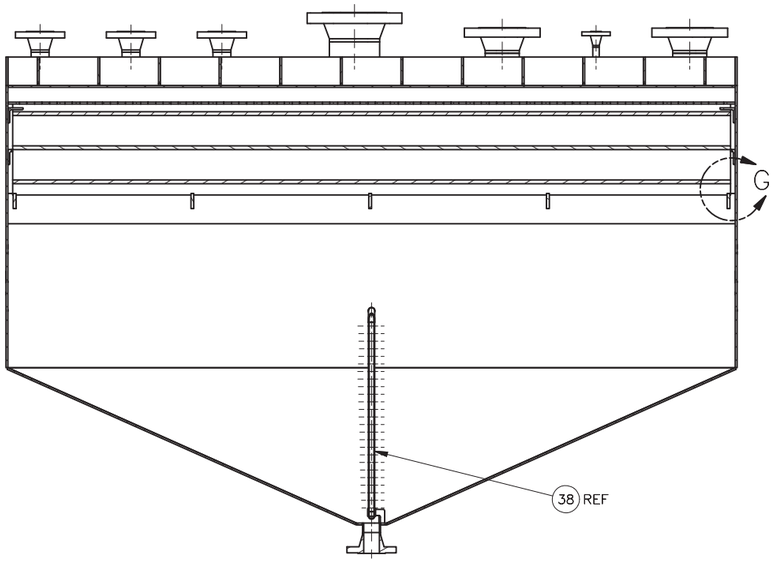

SECTION B–B
SCALE: 1/10

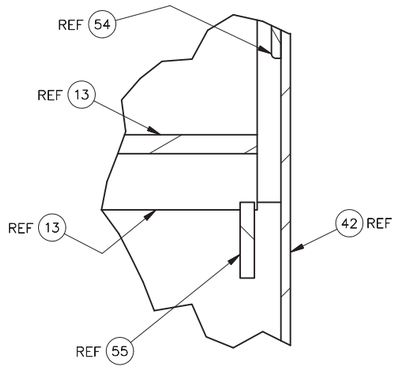

VIEW G
SCALE: 1/2

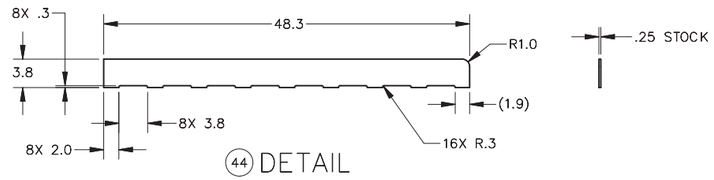

44 DETAIL
SCALE: 1/10

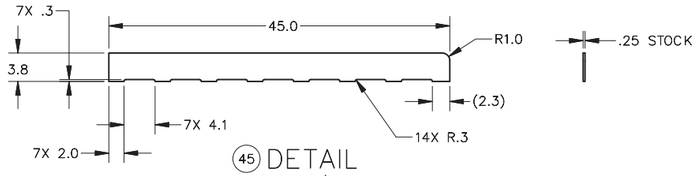

45 DETAIL
SCALE: 1/10

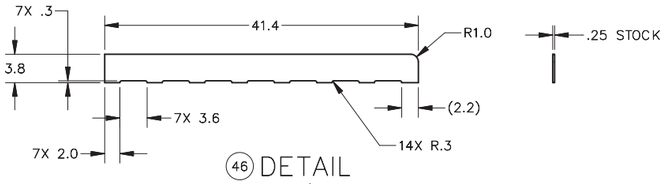

46 DETAIL
SCALE: 1/10

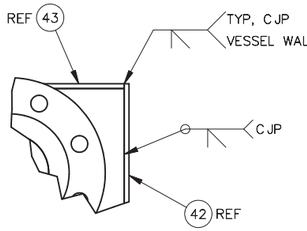

VIEW E
SCALE: 1/4

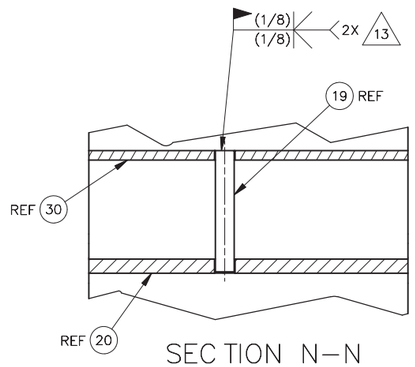

SECTION N–N
SCALE: 1/2

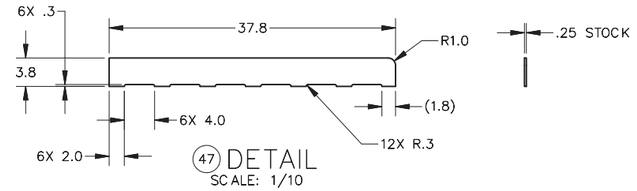

47 DETAIL
SCALE: 1/10

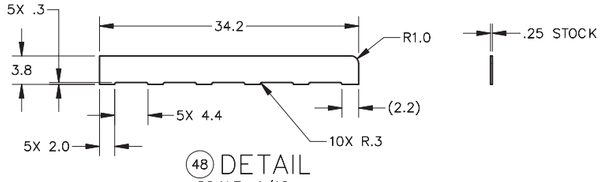

48 DETAIL
SCALE: 1/10

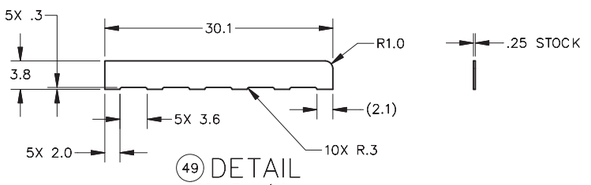

49 DETAIL
SCALE: 1/10

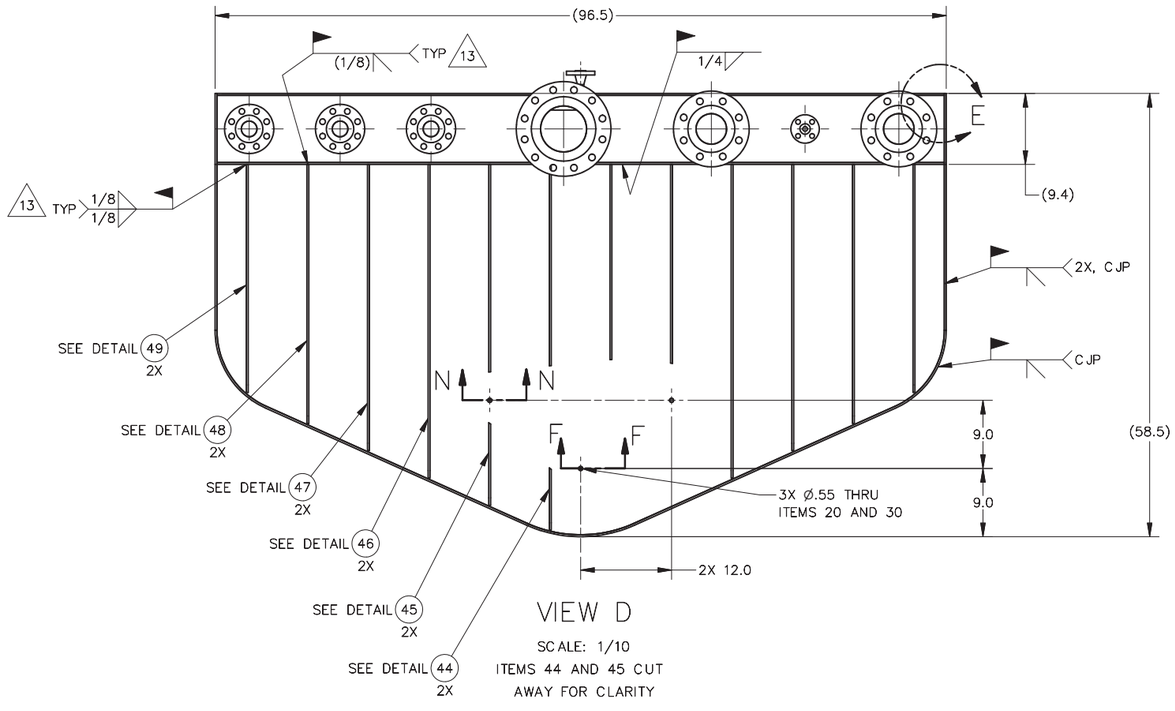

VIEW D
SCALE: 1/10
ITEMS 44 AND 45 CUT AWAY FOR CLARITY

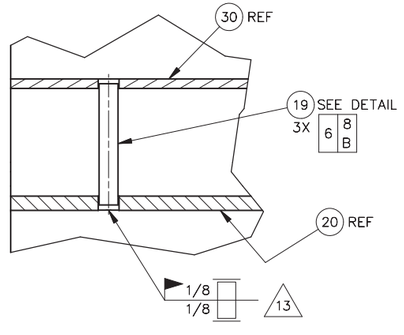

SECTION F–F
SCALE: 1/2

SIZE	INDEX CODE NUMBER				DWG-	808193	REV
	AREA	TYPE	CL	ORIG			
D	200	1696	40	286A			
SCALE: NOTED					SHEET	5	

ID: matt.pennington
Layout Name: 5 of 12
File: 808193 CLARIFIER.dwg Date: 7/13/2017 - 10:37:41
Path: C:\VAULT\Projects\INL\FLUOR\WTU\WASTE FEED SUMP TANK\808193 CLARIFIER.dwg

INV: FMT-D1-REV 2017-02-28

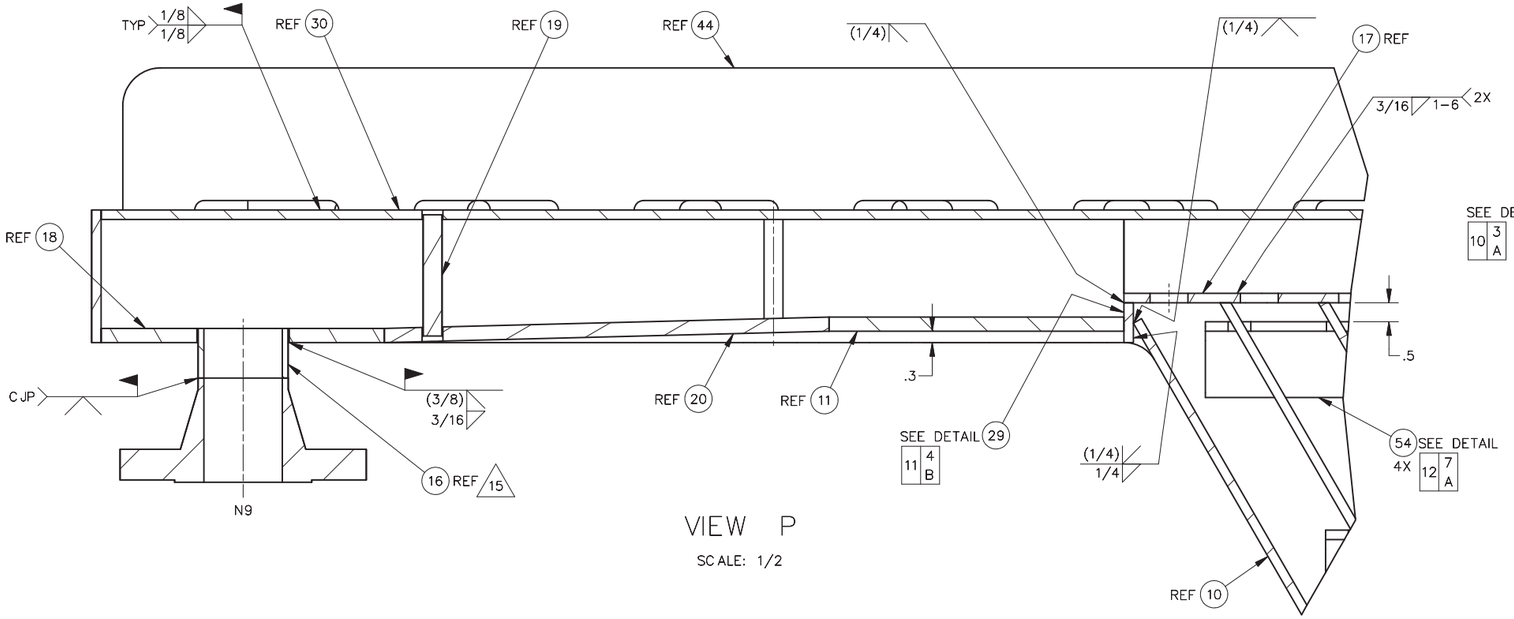

VIEW P

SCALE: 1/2

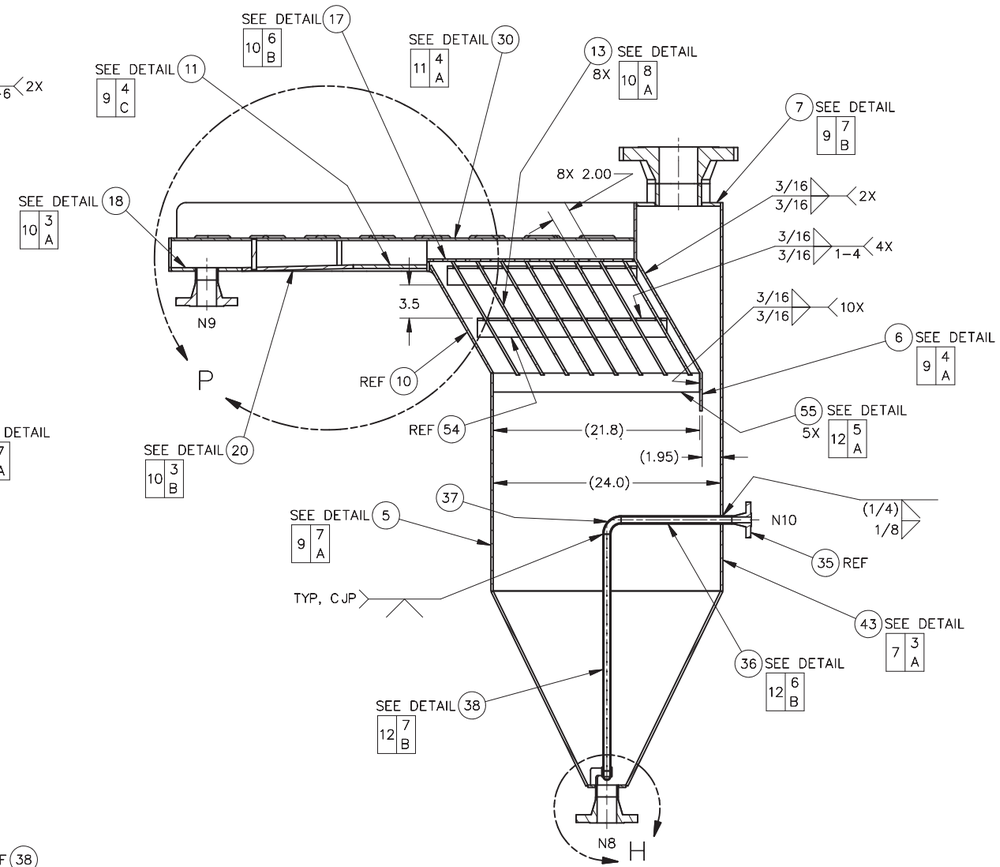

SECTION A–A

SCALE: 1/8

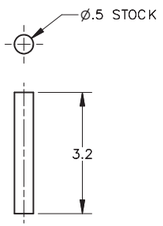

19 DETAIL

SCALE: 1/2

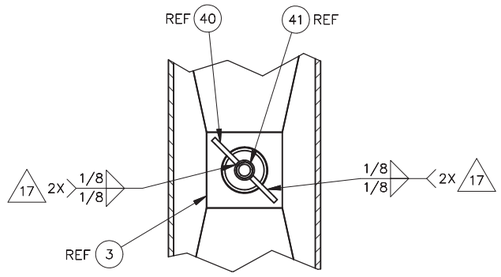

SECTION J–J

SCALE: 1/4

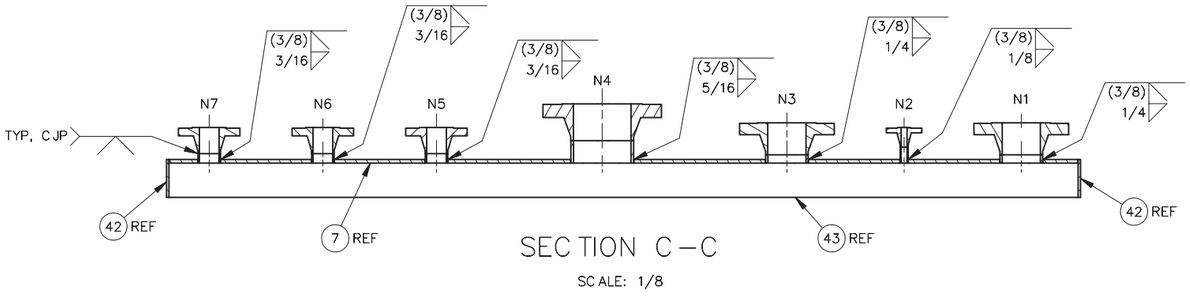

SECTION C–C

SCALE: 1/8

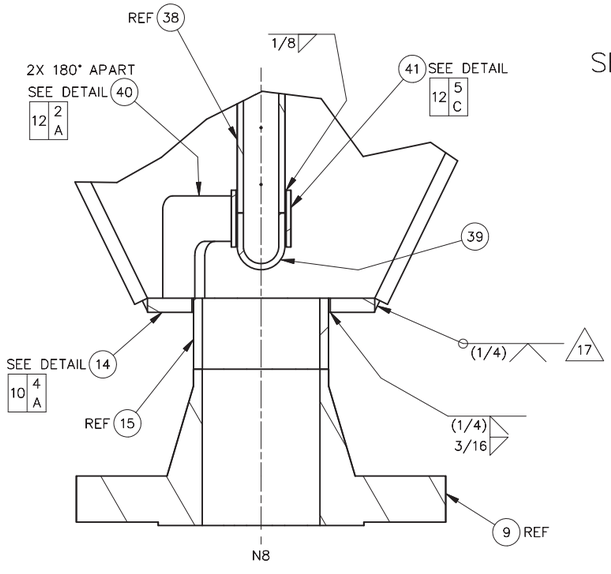

VIEW H

SCALE: 3/4

SIZE	INDEX CODE NUMBER				DWG-	REV
	AREA	TYPE	CL	ORIG		
D	200	1696	40	286A	808193	
SCALE: NOTED					SHEET 6	

File: 808193 CLARIFIER.dwg Date: 7/13/2017 - 10:37:41 Layout Name: 6 of 12
Path: C:\VAULT Projects\INL\FLUOR\WTU\WASTE FEED SUMP TANK\808193 CLARIFIER.dwg
ID: matt.pennington

INV: FMT-D1-REV 2017-02-28

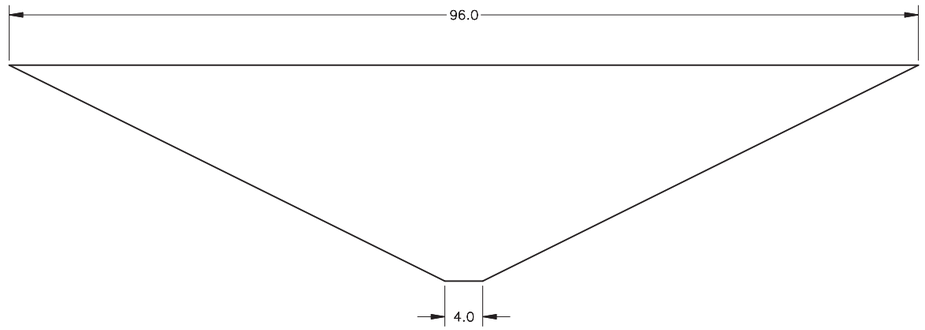

③ DETAIL
SCALE: 1/8

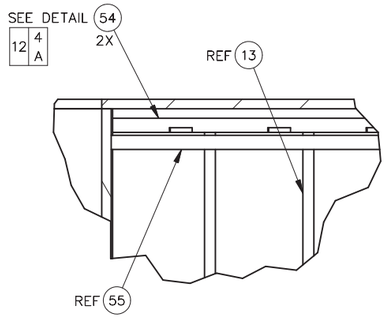

VIEW L
SCALE: 1/2

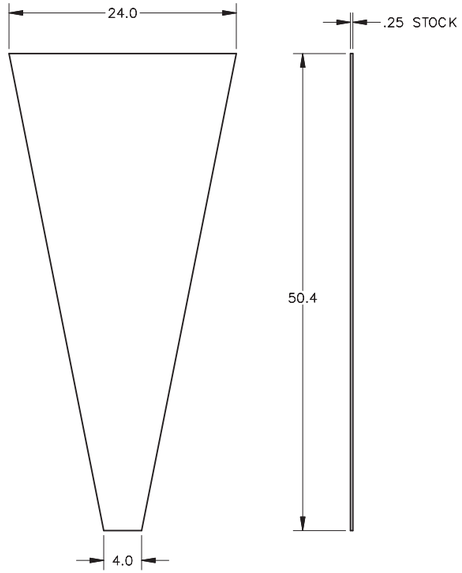

④ DETAIL
SCALE: 1/8

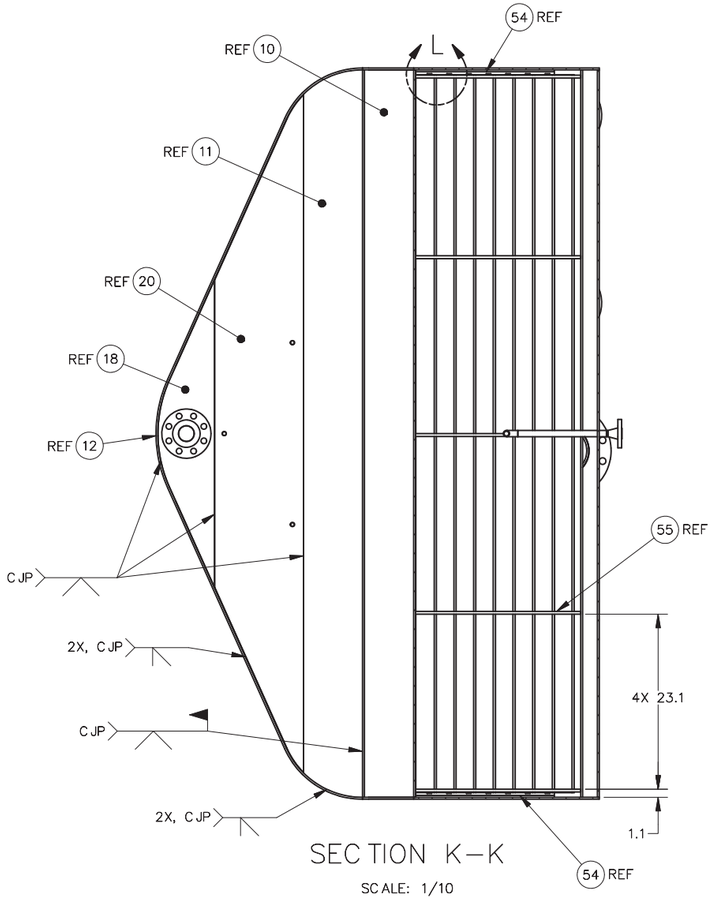

SECTION K–K
SCALE: 1/10

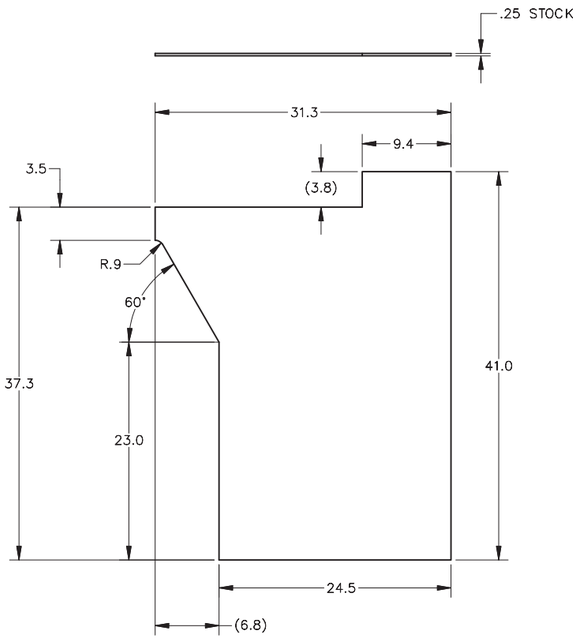

④② DETAIL
SCALE: 1/8

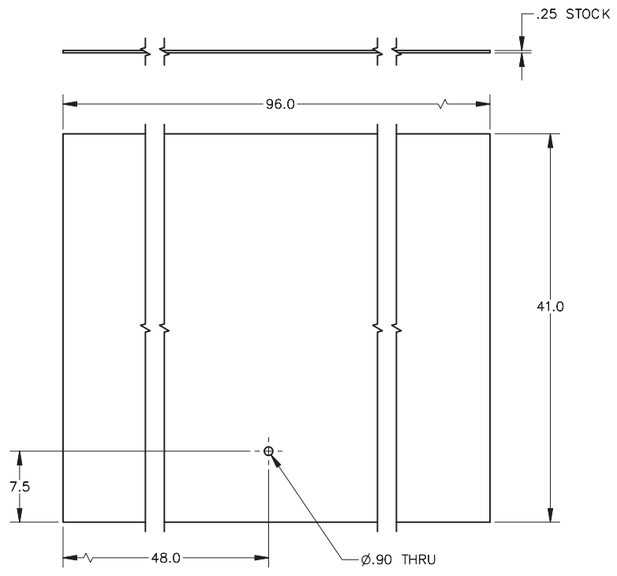

④③ DETAIL
SCALE: 1/8

SIZE	INDEX CODE NUMBER				DWG-	808193	REV
D	AREA	TYPE	CL	ORIG			
	200	1696	40	286A			
SCALE: NOTED					SHEET	7	

File: 808193 CLARIFIER.dwg Date: 7/13/2017 – 10:37:41 Layout Name: 7 of 12
Path: C:\VAULT\Projects\INL\FLUOR WTU\WASTE FEED SUMP TANK\808193 CLARIFIER.dwg ID: matt.pennington

INV: FMT-D1-REV 2017-02-28

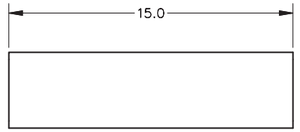

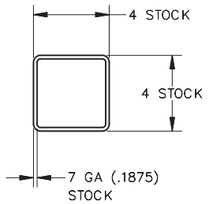

(52) DETAIL
SCALE: 1/4

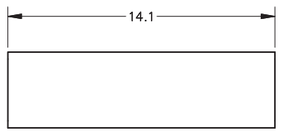

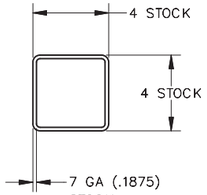

(53) DETAIL
SCALE: 1/4

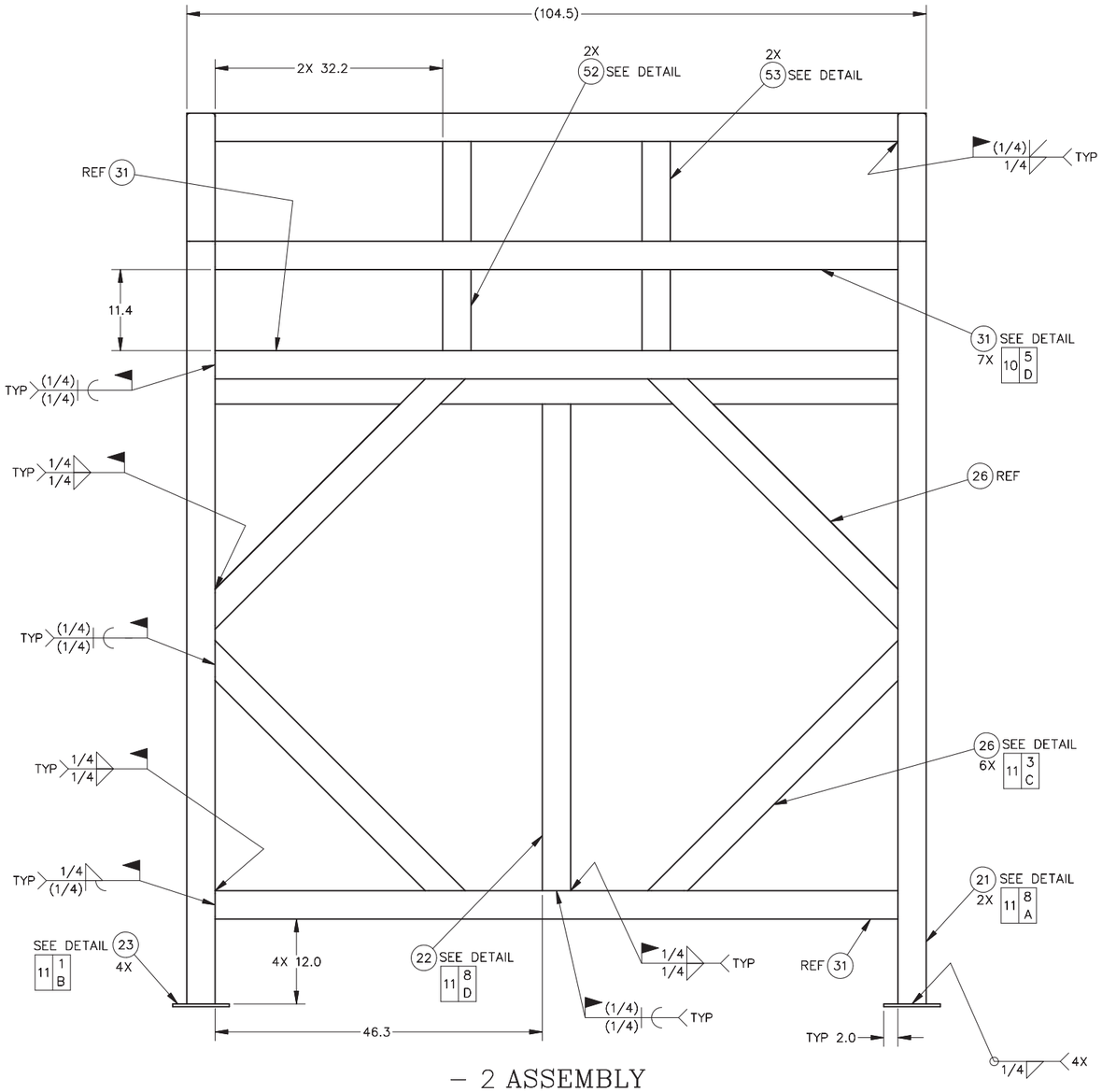

– 2 ASSEMBLY
SCALE: 1/10

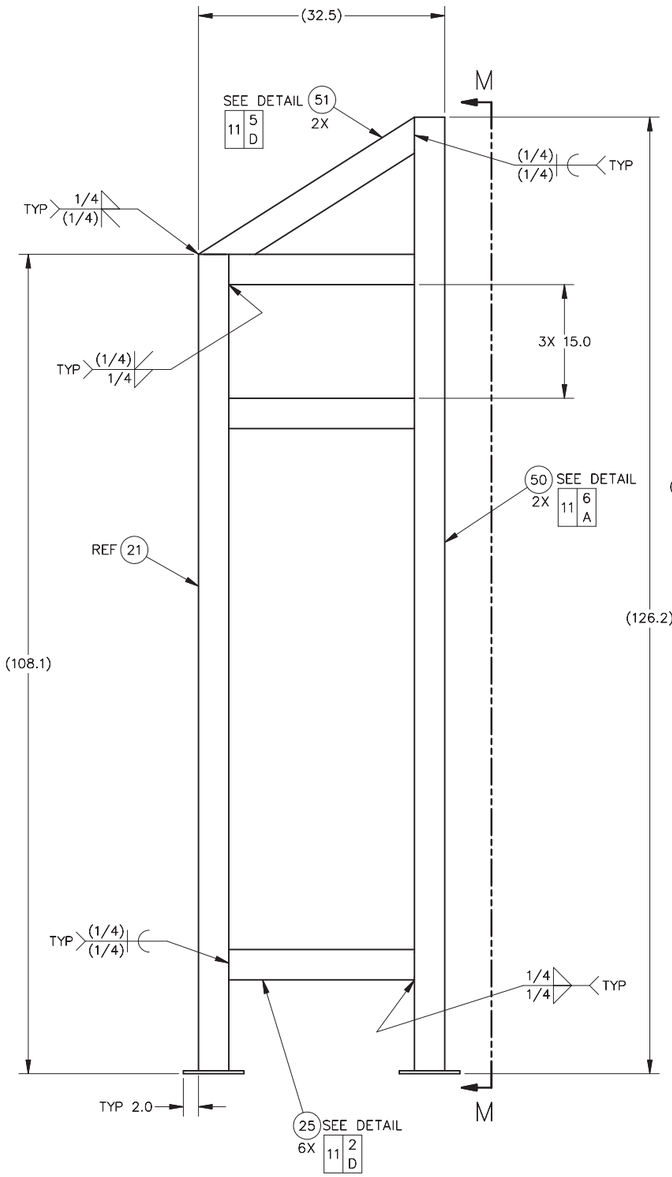

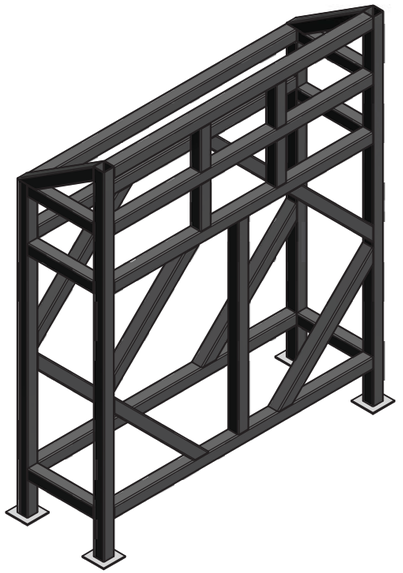

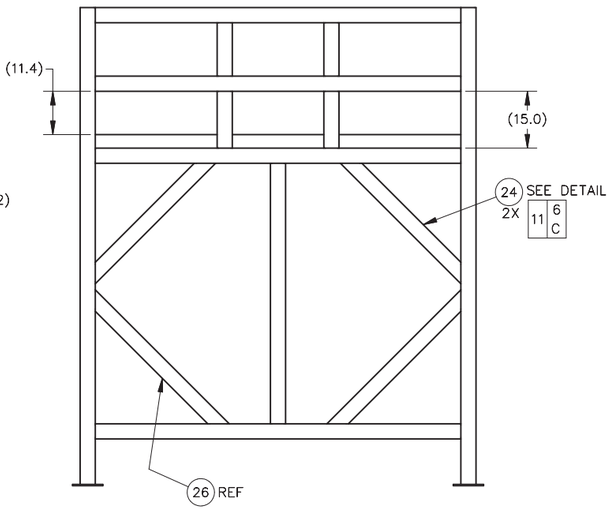

VIEW M
SCALE: 1/20

SIZE	INDEX CODE NUMBER				DWG-	REV
	AREA	TYPE	CL	ORIG		
D	200	1696	40	286A	808193	
SCALE: NOTED					SHEET 8	

File: 808193 CLARIFIER.dwg Date: 7/13/2017 – 10:37:41 Layout Name: 8 of 12
Path: C:\VAULT\Projects\INL\FLUOR\WTU\WASTE FEED SUMP TANK 808193 CLARIFIER.dwg
ID: matt.pennington

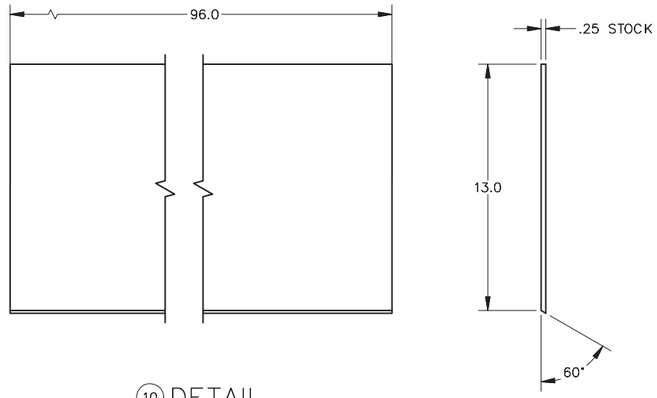

⑩ DETAIL
SCALE: 1/4

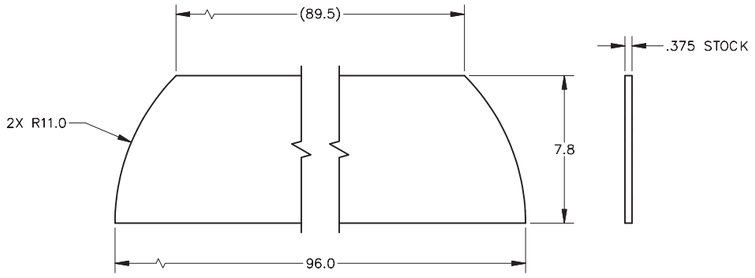

⑪ DETAIL
SCALE: 1/4

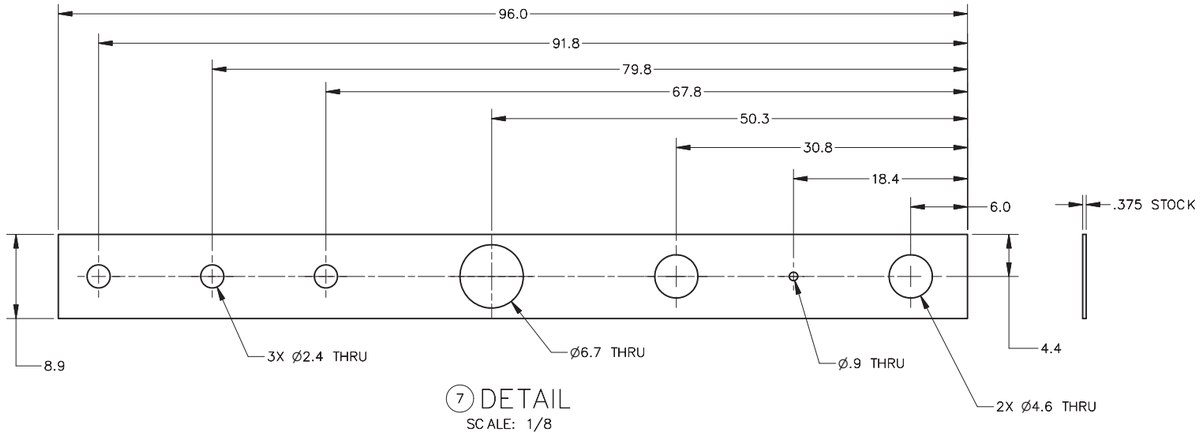

⑦ DETAIL
SCALE: 1/8

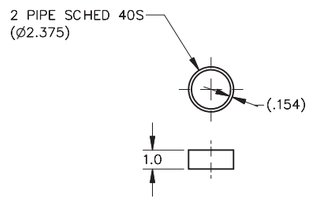

⑧ DETAIL
SCALE: 1/4

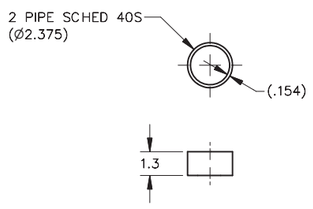

⑮ DETAIL
SCALE: 1/4

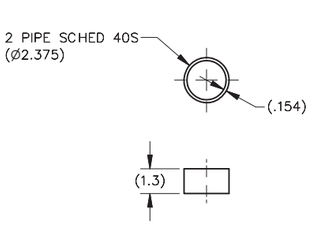

⑯ DETAIL △15
SCALE: 1/4

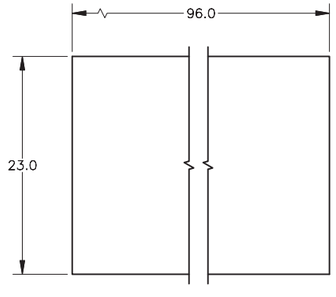

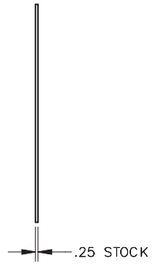

⑤ DETAIL
SCALE: 1/8

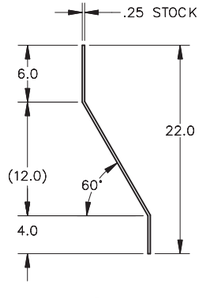

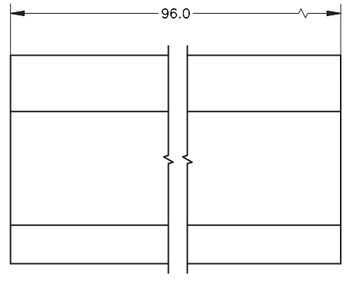

⑥ DETAIL
SCALE: 1/8

SIZE	INDEX CODE NUMBER				DWG-	REV
	AREA	TYPE	CL	ORIG		
D	200	1696	40	286A	808193	
SCALE: NOTED					SHEET 9	

File: 808193 CLARIFIER.dwg Date: 7/13/2017 - 10:37:41 Layout Name: 9 of 12
Path: C:\VAULT Projects\INL\FLUOR\WTU\WASTE FEED SUMP TANK 808193 CLARIFIER.dwg
ID: matt.pennington

INV: FMT-D1-REV 2017-02-28

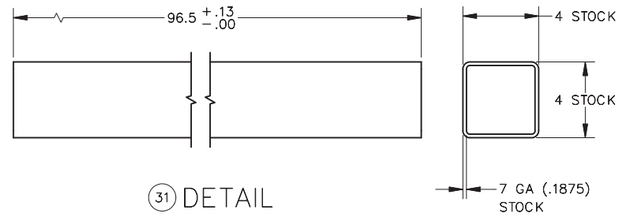

(31) DETAIL
SCALE: 1/4

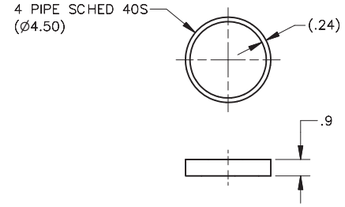

(32) DETAIL
SCALE: 1/4

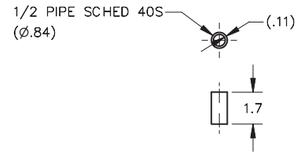

(34) DETAIL
SCALE: 1/4

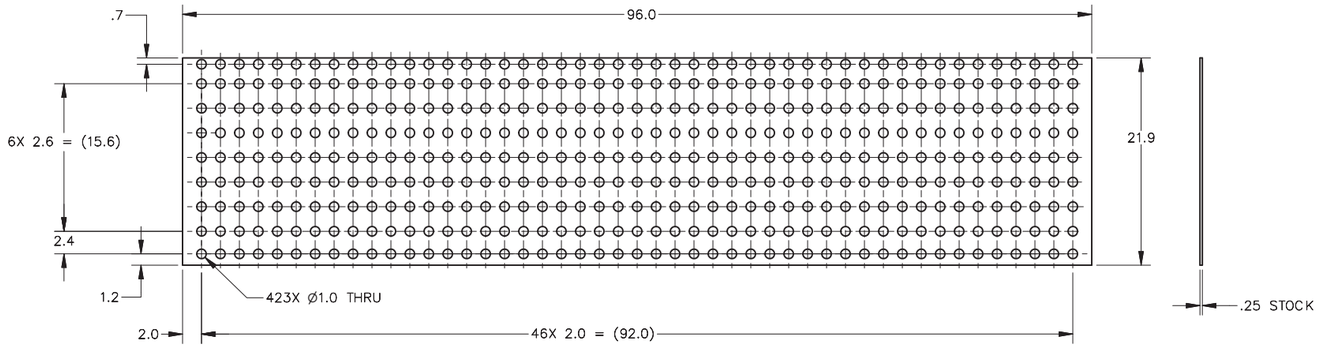

(17) DETAIL
SCALE: 1/8

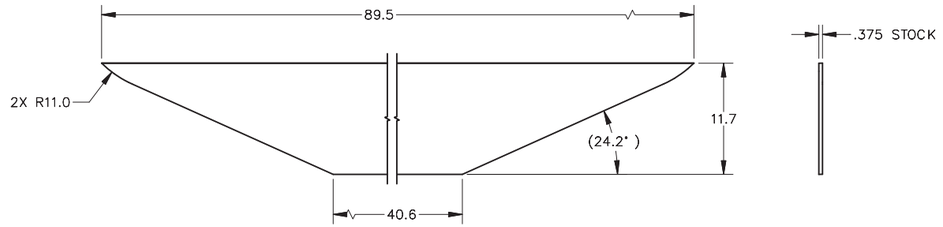

(20) DETAIL
SCALE: 1/8

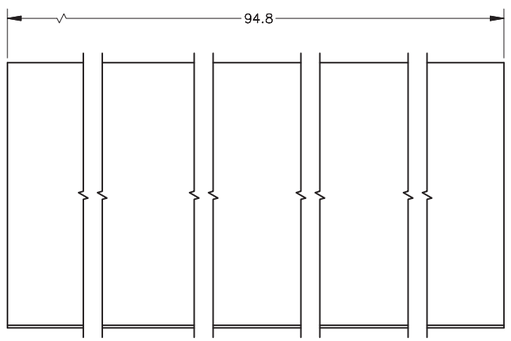

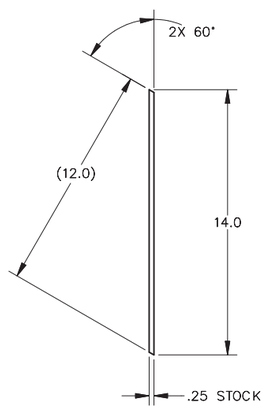

(13) DETAIL
SCALE: 1/4

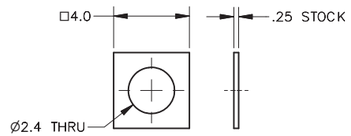

(14) DETAIL
SCALE: 1/4

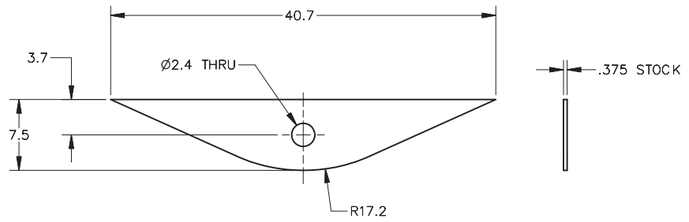

(18) DETAIL
SCALE: 1/8

SIZE	INDEX CODE NUMBER				DWG-	808193	REV
	AREA	TYPE	CL	ORIG			
D	200	1696	40	286A			
SCALE: NOTED					SHEET	10	

File: 808193 CLARIFIER.dwg Date: 7/13/2017 - 10:37:41 Layout Name: 10 of 12
Path: C:\VAULT\Projects\INL\FLUOR\WTO\WASTE FEED SUMP TANK 808193 CLARIFIER.dwg
ID: matt.pennington

INV: FMT-D1-REV 2017-02-28

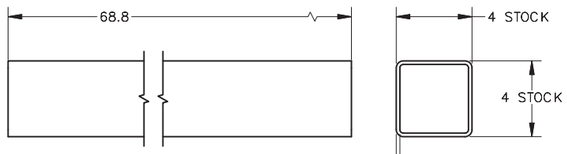

(22) DETAIL
SCALE: 1/4

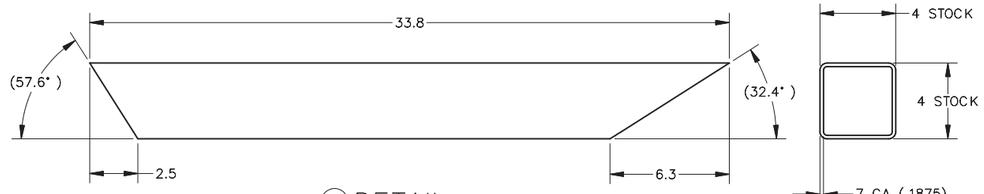

(51) DETAIL
SCALE: 1/4

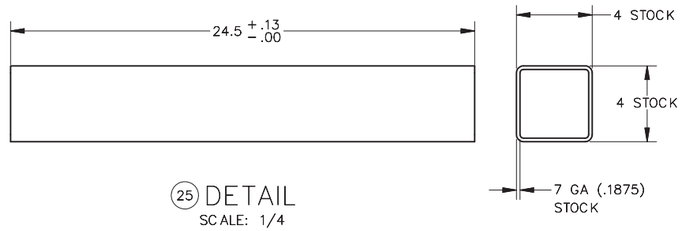

(25) DETAIL
SCALE: 1/4

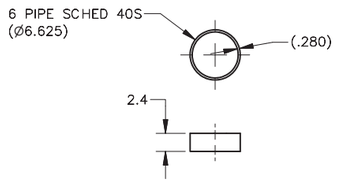

(27) DETAIL
SCALE: 1/10

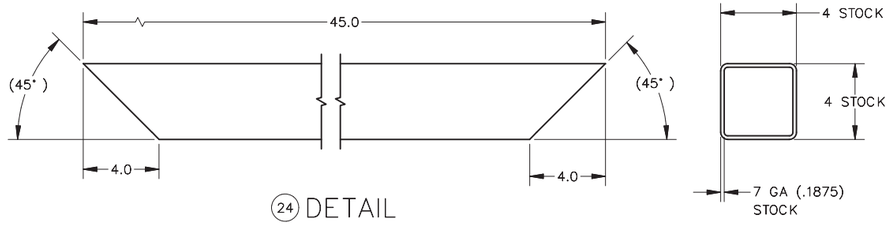

(24) DETAIL
SCALE: 1/4

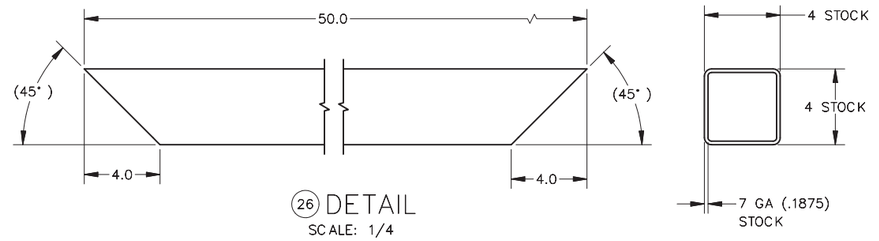

(26) DETAIL
SCALE: 1/4

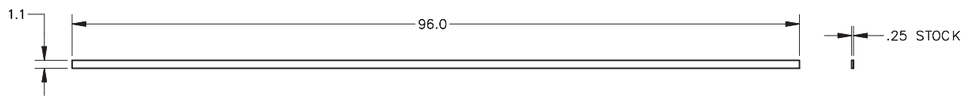

(29) DETAIL
SCALE: 1/10

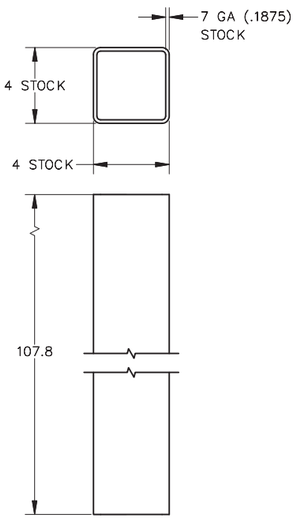

(21) DETAIL
SCALE: 1/4

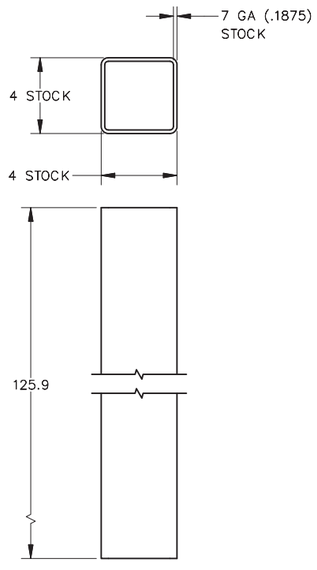

(50) DETAIL
SCALE: 1/4

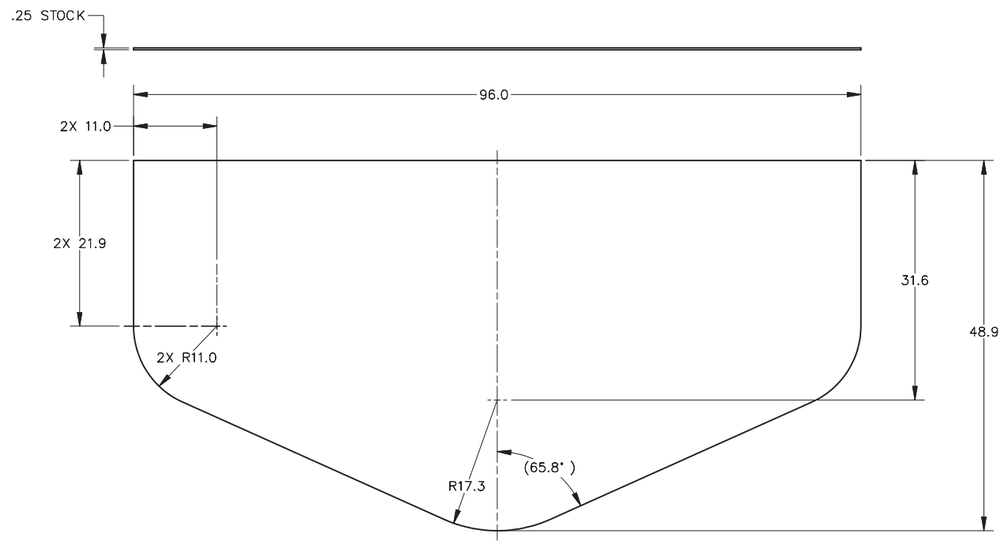

(30) DETAIL
SCALE: 1/10

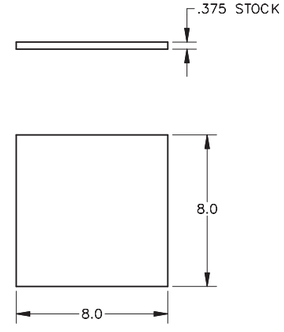

(23) DETAIL
SCALE: 1/4

SIZE	INDEX CODE NUMBER				DWG-	808193	REV
	AREA	TYPE	CL	ORIG			
D	200	1696	40	286A			
SCALE: NOTED					SHEET	11	

File: 808193 CLARIFIER.dwg Date: 7/13/2017 - 10:37:41 Layout Name: 11 of 12
Path: C:\VAULT Projects\INX FLUOR\WTU\WASTE FEED SUMP TANK 808193 CLARIFIER.dwg
ID: matt.pennington

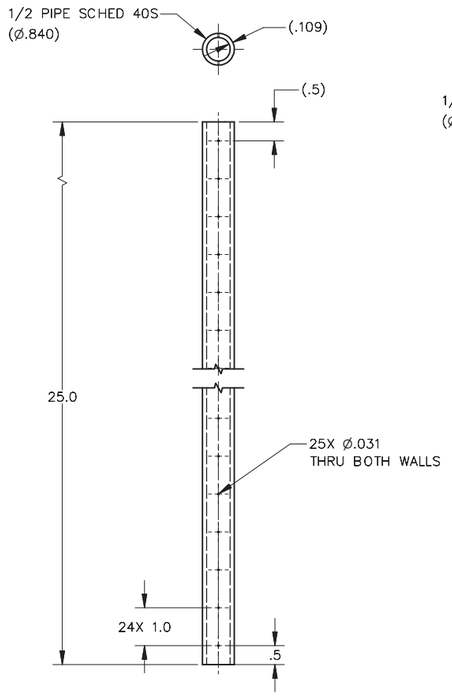

(38) DETAIL
SCALE: 1/2

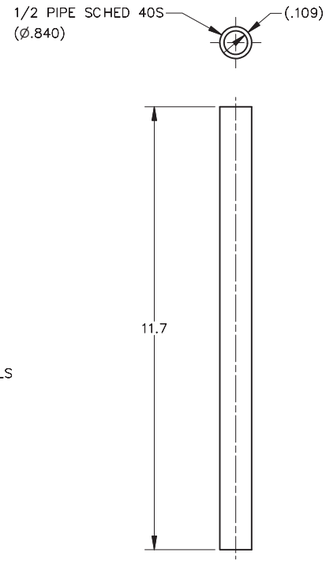

(36) DETAIL
SCALE: 1/2

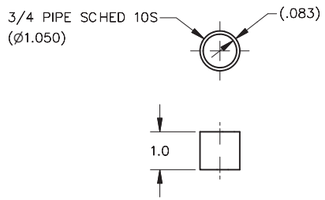

(41) DETAIL
SCALE: 1/2

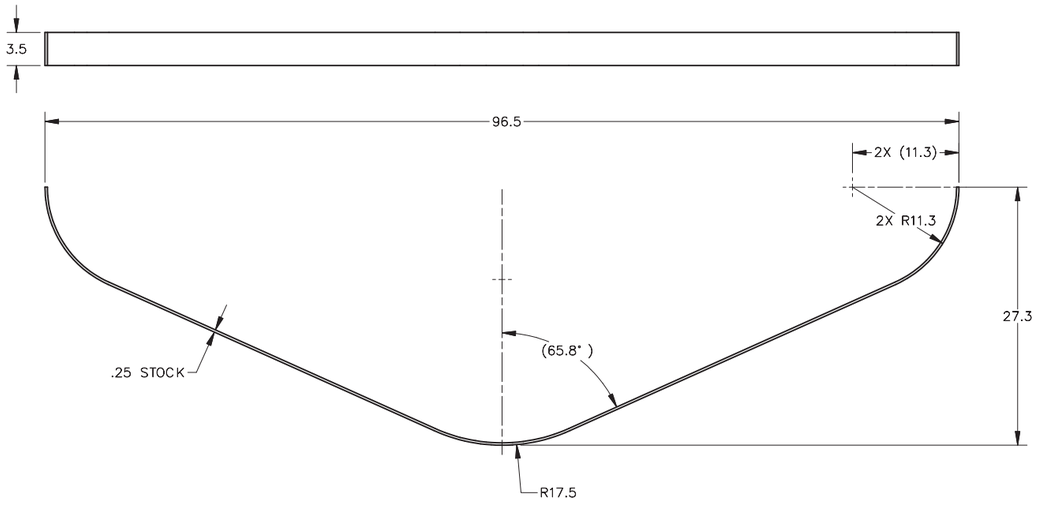

(12) DETAIL (14)
SCALE: 1/8

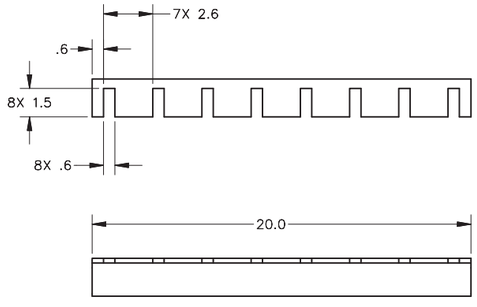

(54) DETAIL
SCALE: 1/4

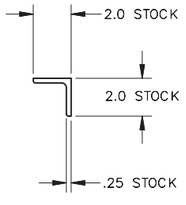

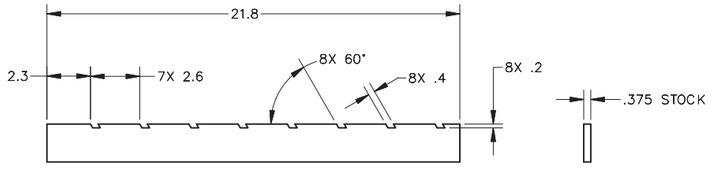

(55) DETAIL
SCALE: 1/4

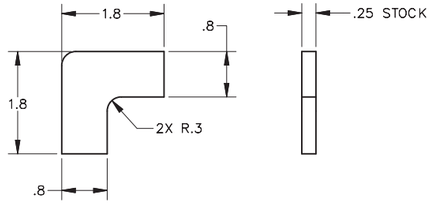

(40) DETAIL
SCALE: 3/4

SIZE	INDEX CODE NUMBER				DWG–	808193	REV
	AREA	TYPE	CL	ORIG			
D	200	1696	40	286A			
SCALE: NOTED						SHEET 12	

File: 808193 CLARIFIER.dwg Date: 7/13/2017 – 10:37:41 Layout Name: 12 of 12
Path: C:\VAULT\Projects\INL\FLUOR\WTU\WASTE FEED SUMP TANK\808193 CLARIFIER.dwg
ID: matt.pennington